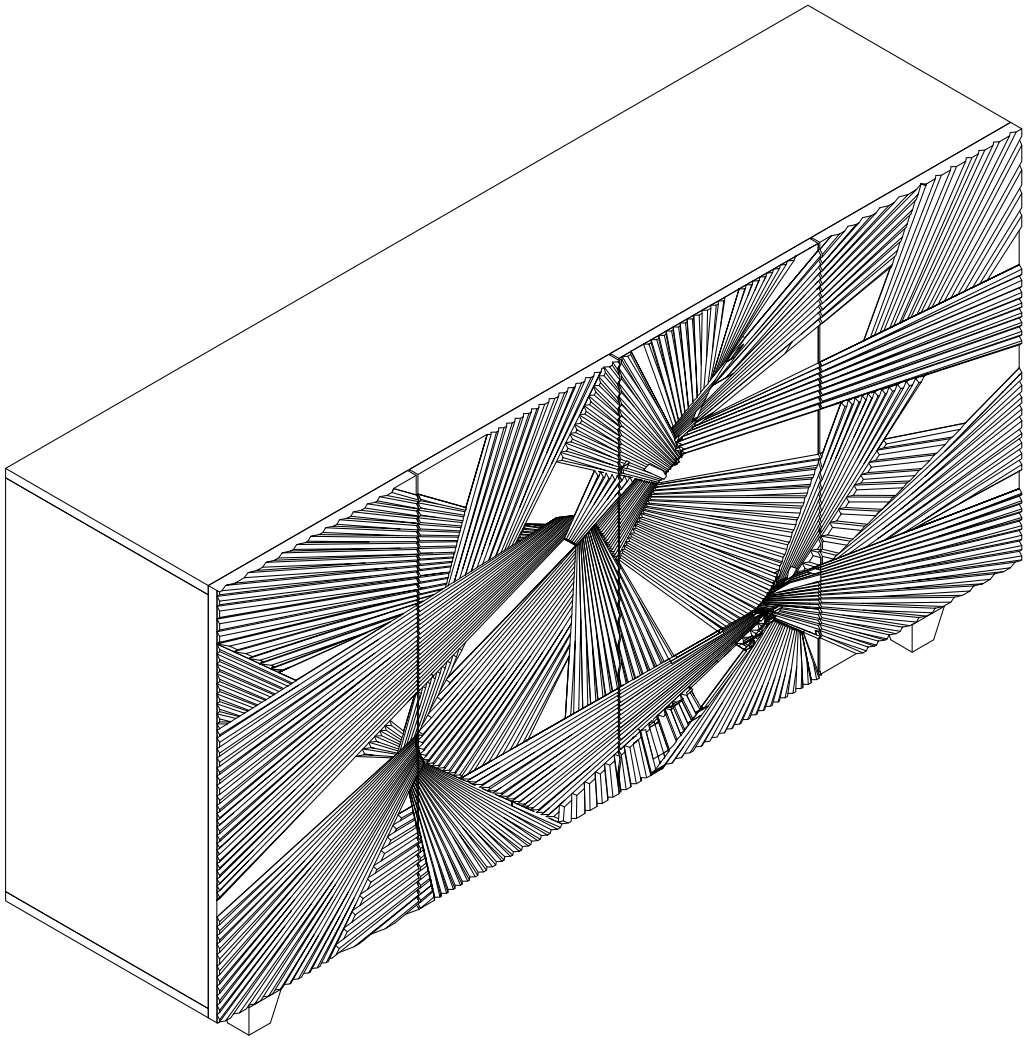

Before You Start

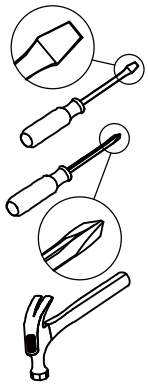

- Read through each step carefully and follow the proper order
- Separate and count all your parts and hardware
- Give yourself enough room for the assembly process
- Have the following tools: Flat Head Screwdriver, #2 Phillips Head Screwdriver and Hammer
- Caution: If using a power drill or power screwdriver for screwing, please be aware of to slow down and stop when screw is tight. Failure to do so may result in stripping the screw. （Assembly speed can be increased by using electric screwdriver）

Helpful Hints

PEOPLE NEEDED FOR ASSEMBLY: **1-2**

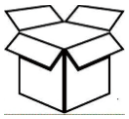

- Open your item in the area you plan to keep it to avoid excessive heavy lifting.



- Identify, sort and count the parts before attempting assembly.



- Compression dowels are lightly tapped in with a hammer.



- Slides are labeled with an **R** (right) and **L** (left) for proper placement.

- Make sure to always face the point on the top of the Cam Lock towards the outer edge.



- If there is a back panel in the package, please install it to make sure your unit is complete and sturdy.



-Please fix all the screws provided for the back panel which can enhance product stability. If it is difficult to fix it when tightening, it can be fixed with the help of a hammer and then tightened.



- Do NOT use harsh chemicals or abrasive cleaners on this item.

- Never push, pull, or drag your furniture.

Board Identification

Not actual size

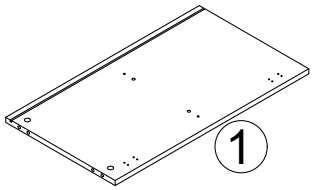

Qty:1

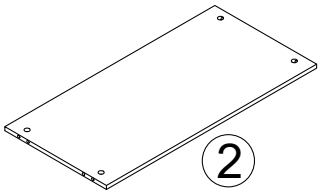

Qty:1

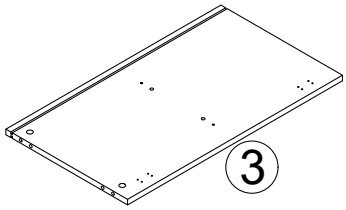

Qty:1

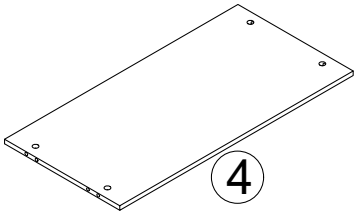

Qty:1

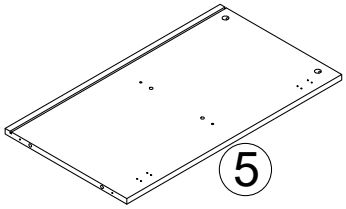

Qty:1

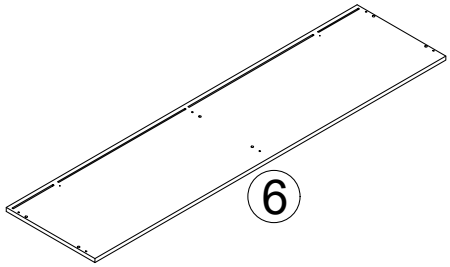

Qty:1

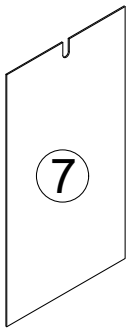

Qty:2

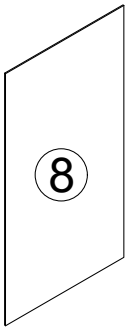

Qty:2

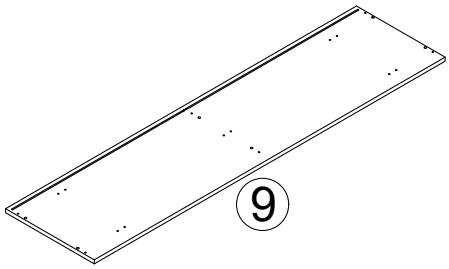

Qty:1

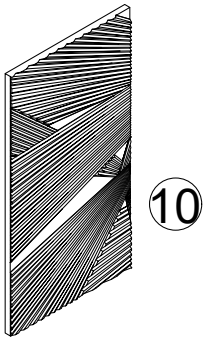

Qty:1

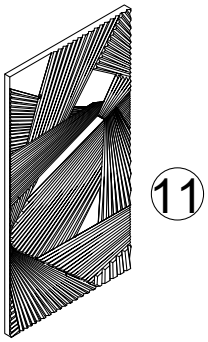

Qty:1

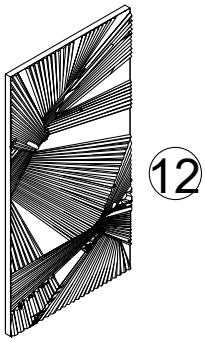

Qty:1

Board Identification

Not actual size



13

Qty:1

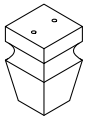

14

Qty:5

Part List

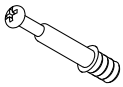

Ø6.5X35mm

A | X 14



Ø15X9.5mm

B | X14

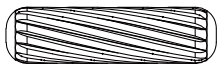

Ø8X25mm

C | X20

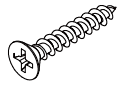

Ø4X30mm

D | X6

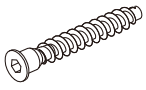

Ø6.3X40mm

E | X 10



Ø3.5X14mm

F | X 48

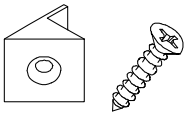

G | X 16

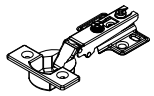

H | X4

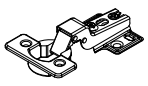

I | X 4

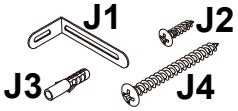

J | X 2

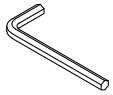

K | X 1

Cam Lock Fastening System

Insert the cam bolt into the hole first, then insert the cam lock and lock it.

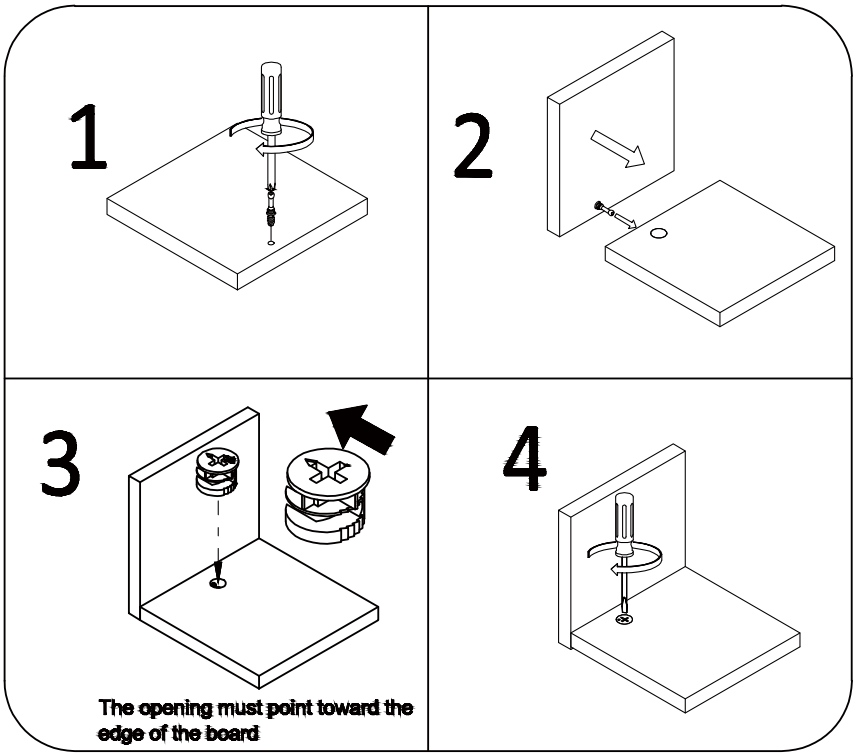

Board Identification

Not actual size

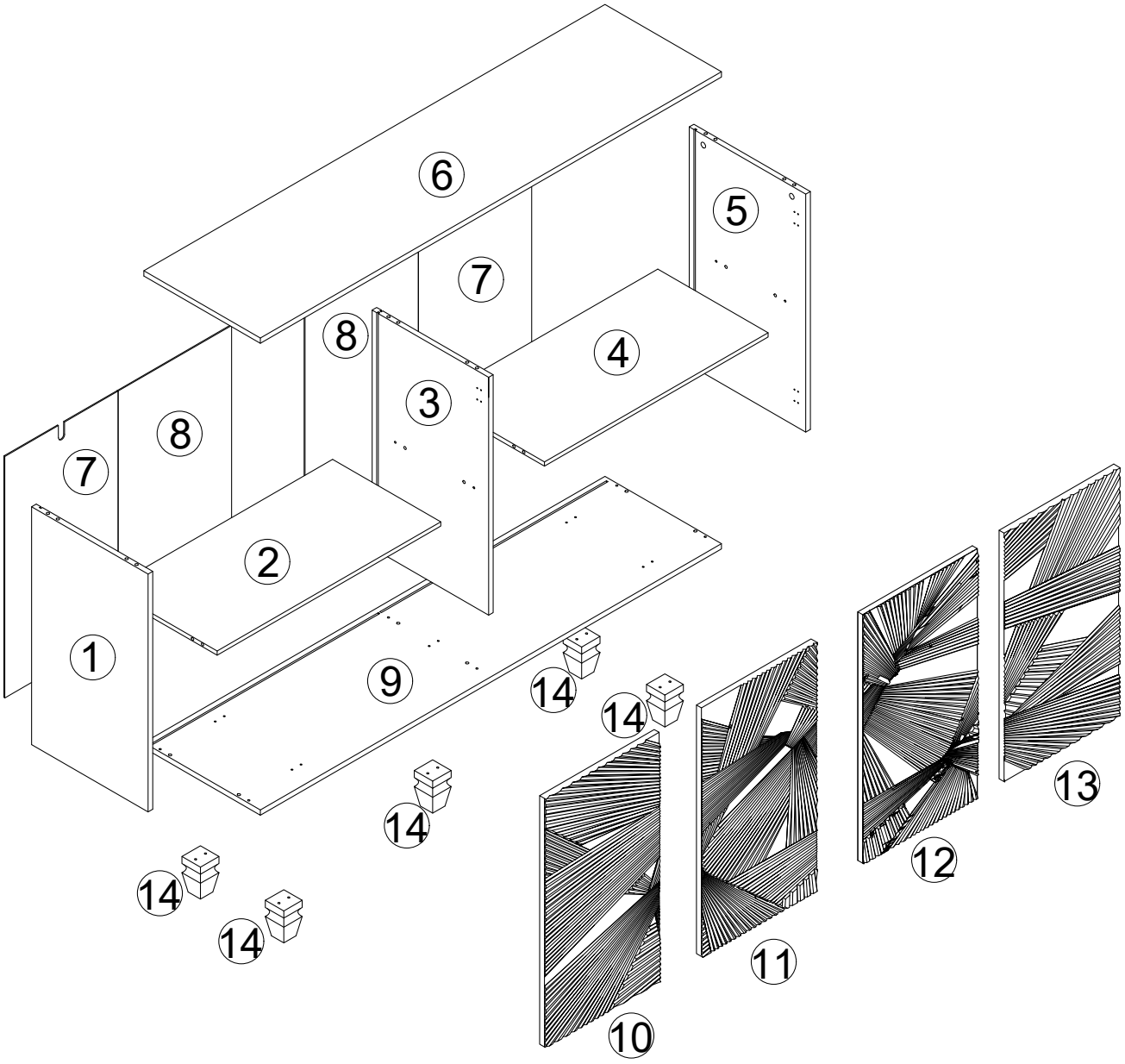

STEP 1

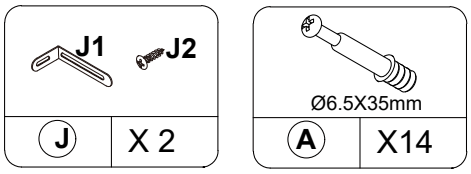
J1
J2
J
X 2
Ø6.5X35mm
A
X14

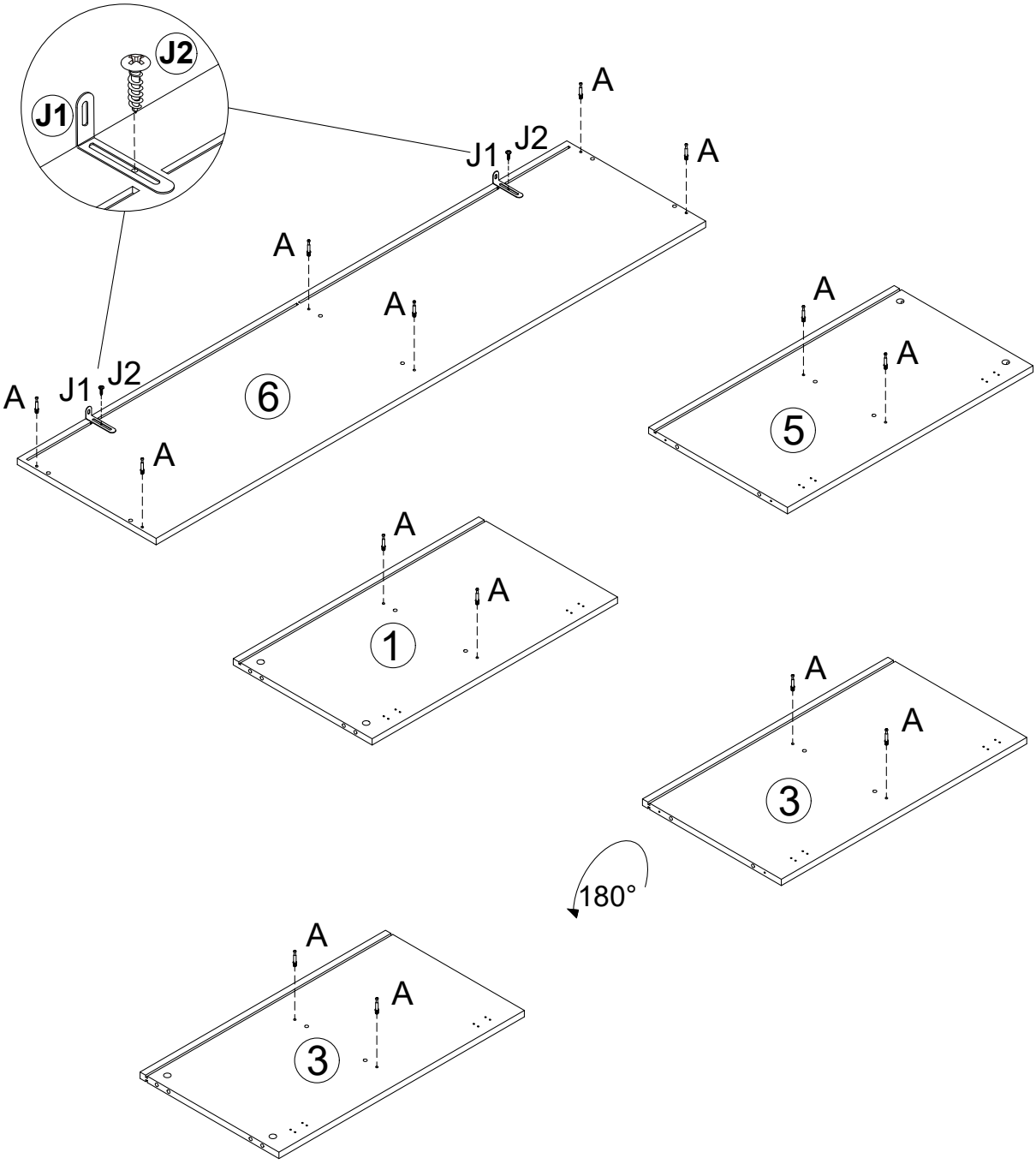
J2
J1
A
J1
J2
A
A
A
A
J1
J2
A
6
A
A
5
A
A
1
A
A
3
180°
A
A
3

STEP 2

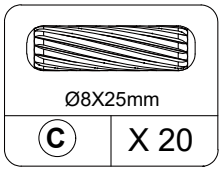

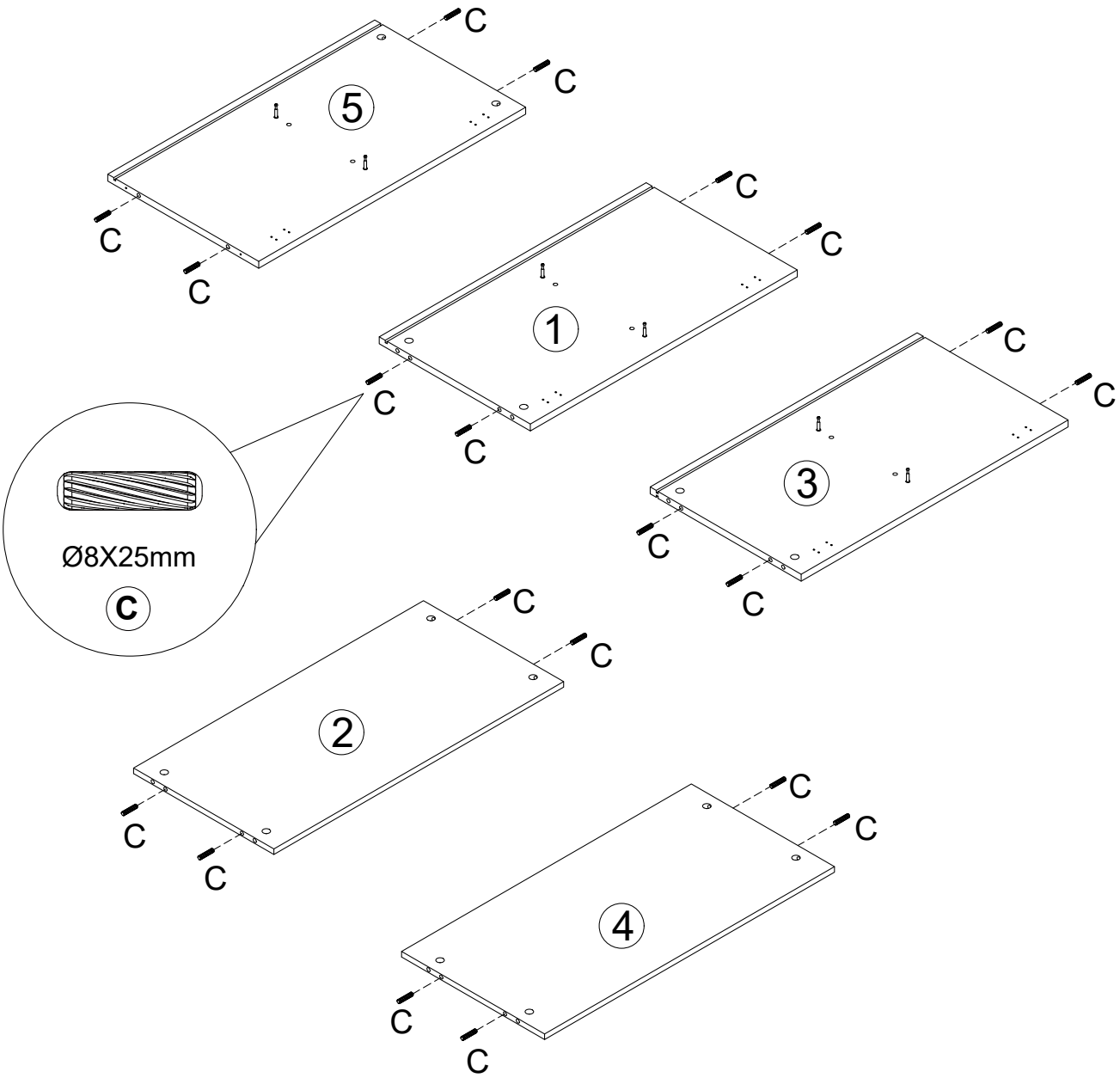

STEP 3

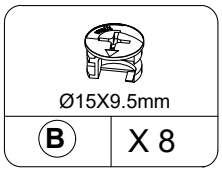

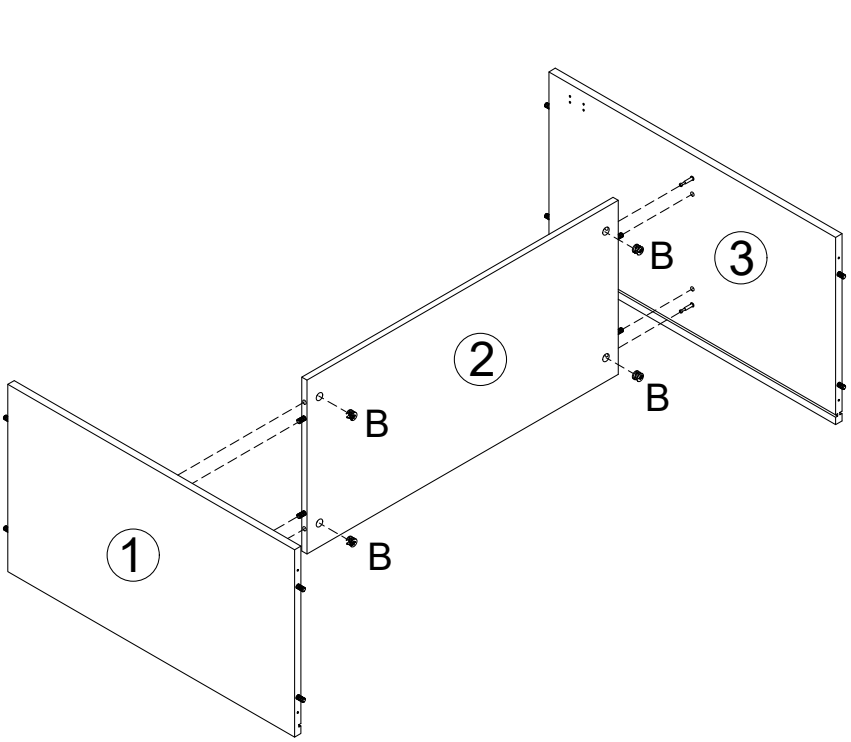

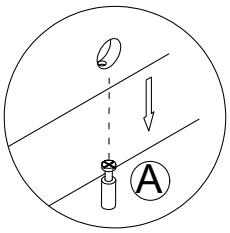

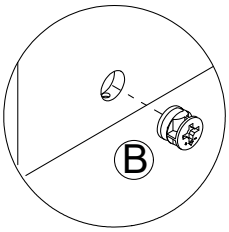

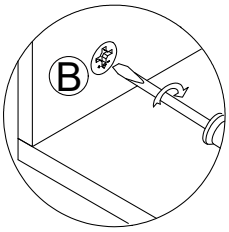

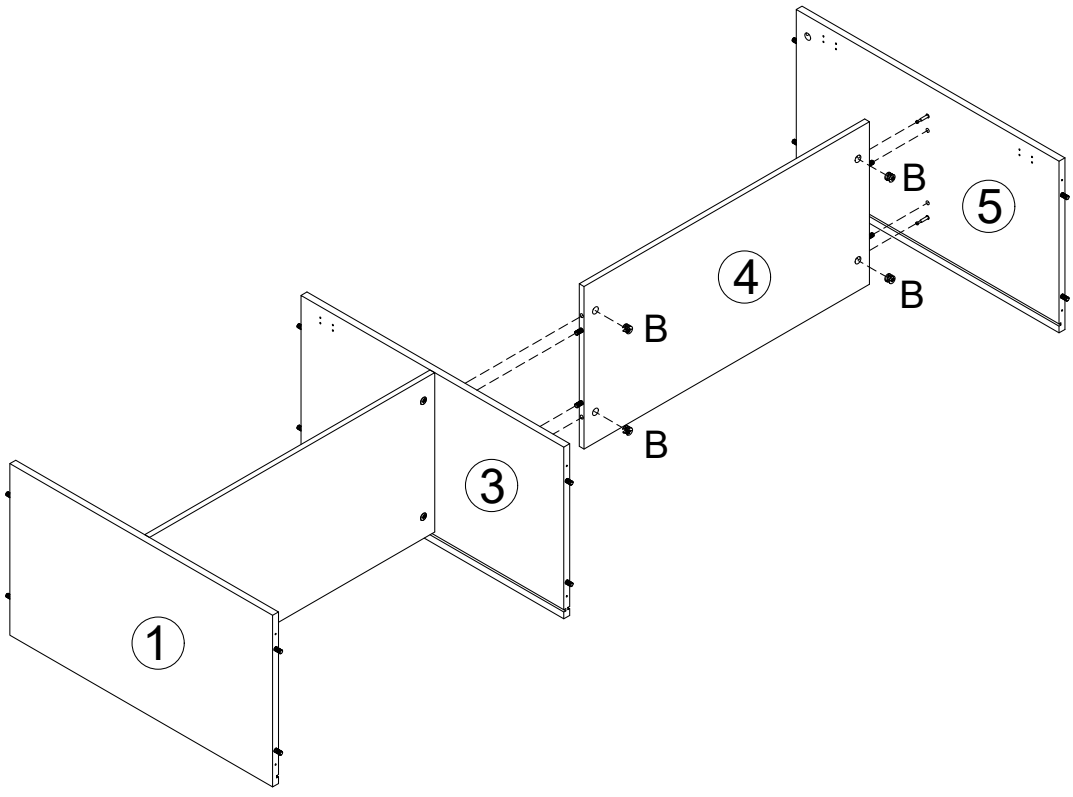

STEP 4

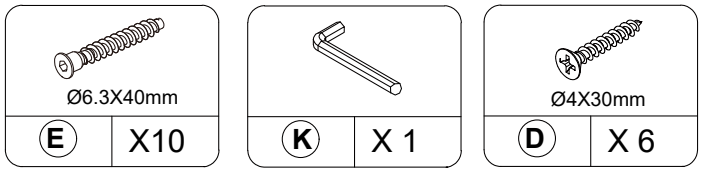
Ø6.3X40mm
E
X10
K
X 1
Ø4X30mm
D
X 6

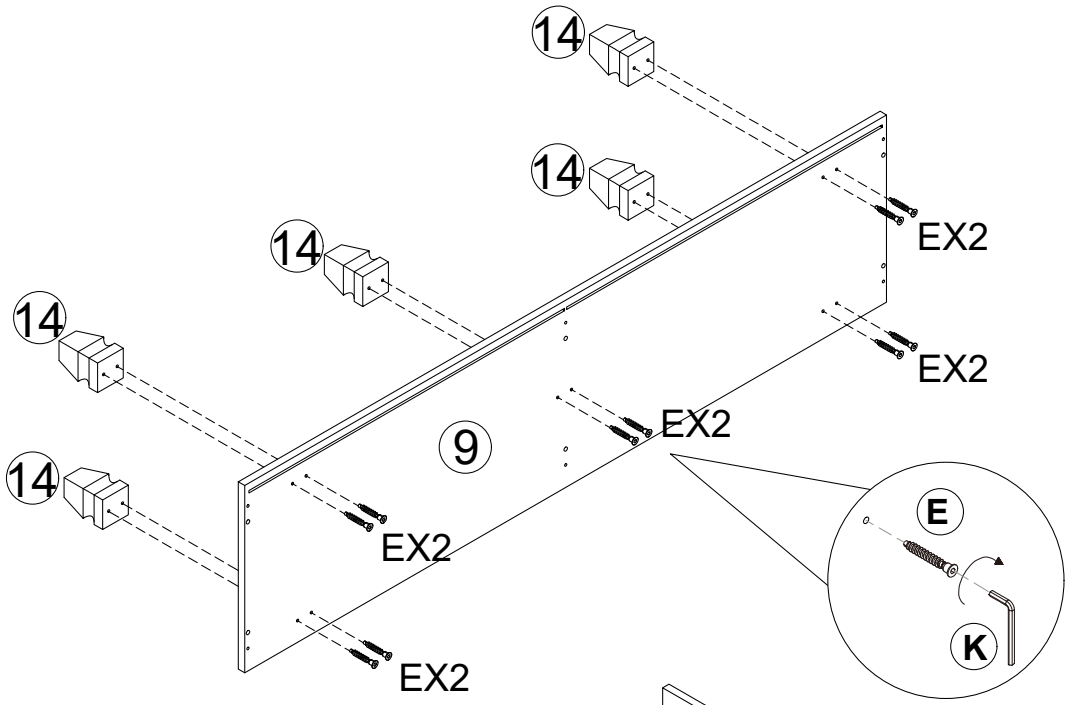
14
14
14
14
14
EX2
EX2
EX2
EX2
EX2
9
E
K

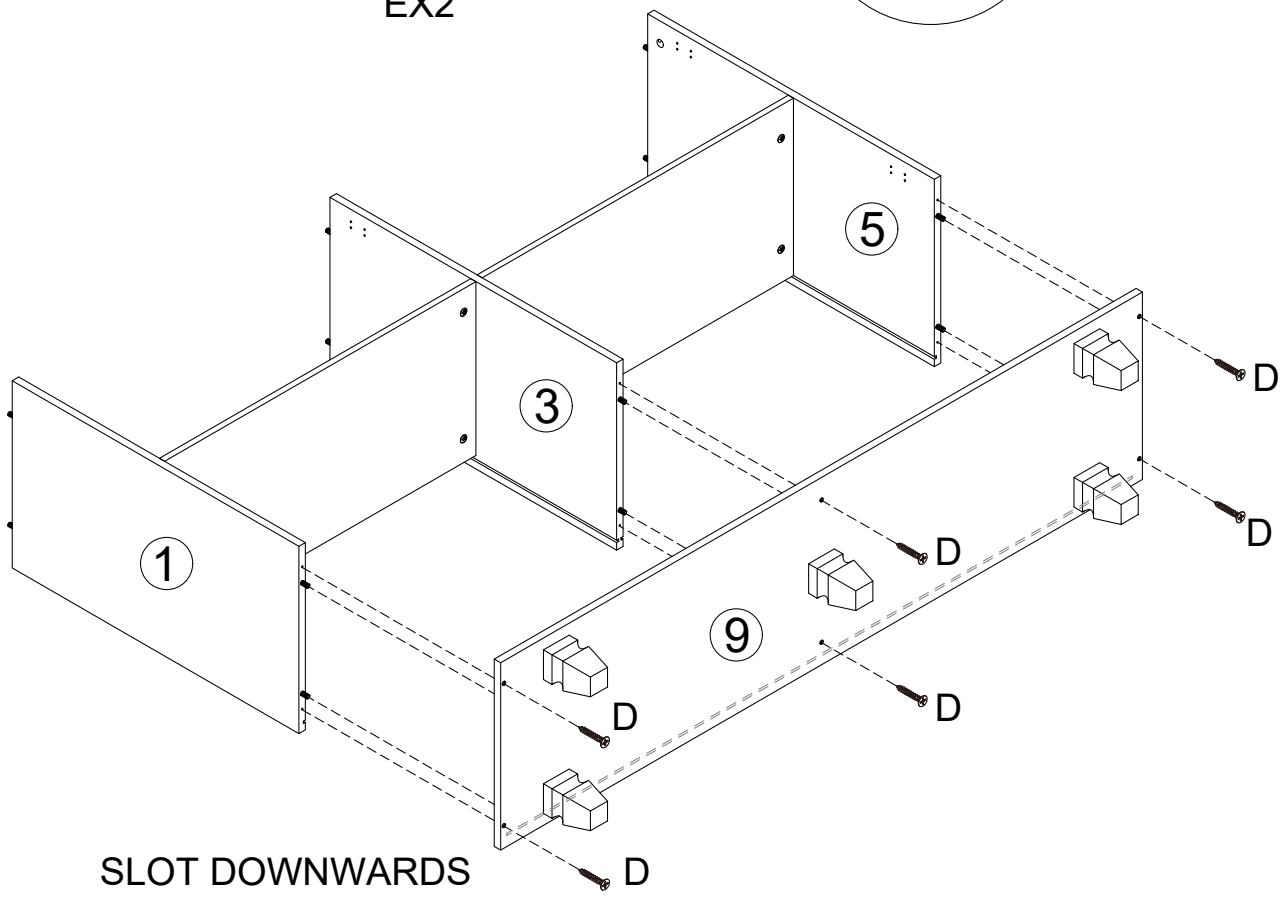
5
3
1
9
D
D
D
D
D
D
SLOT DOWNWARDS

STEP 5

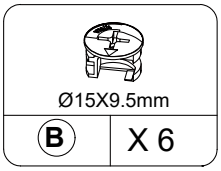

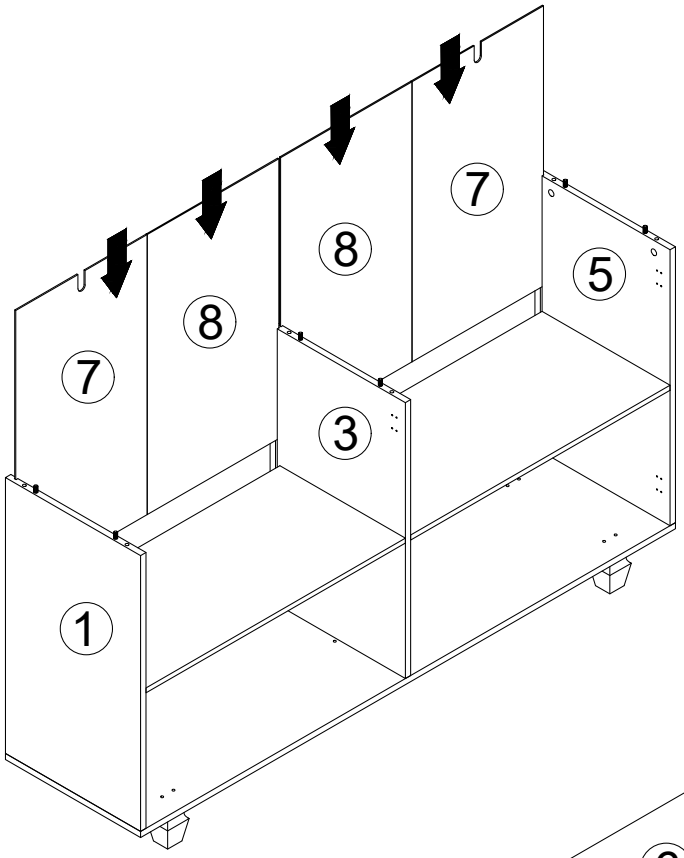

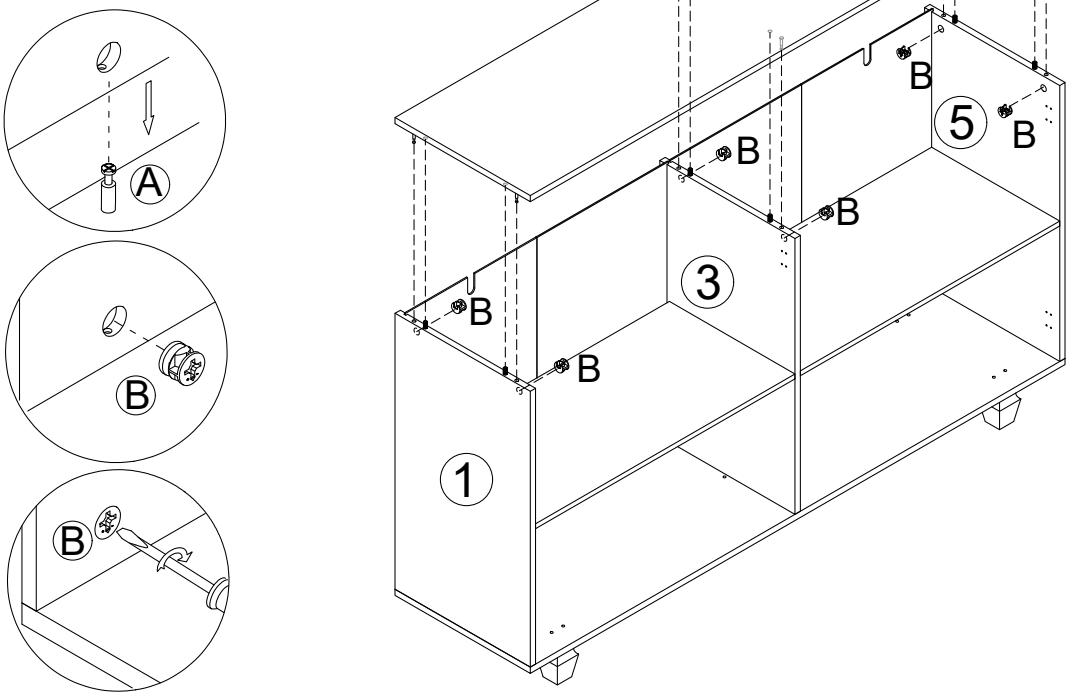

STEP 6

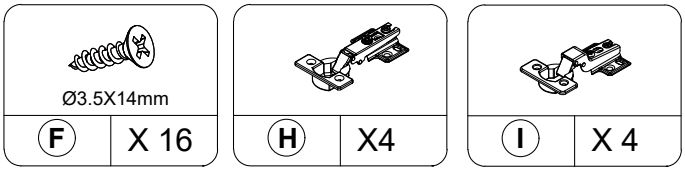
Ø3.5X14mm
F
X 16
H
X4
I
X 4

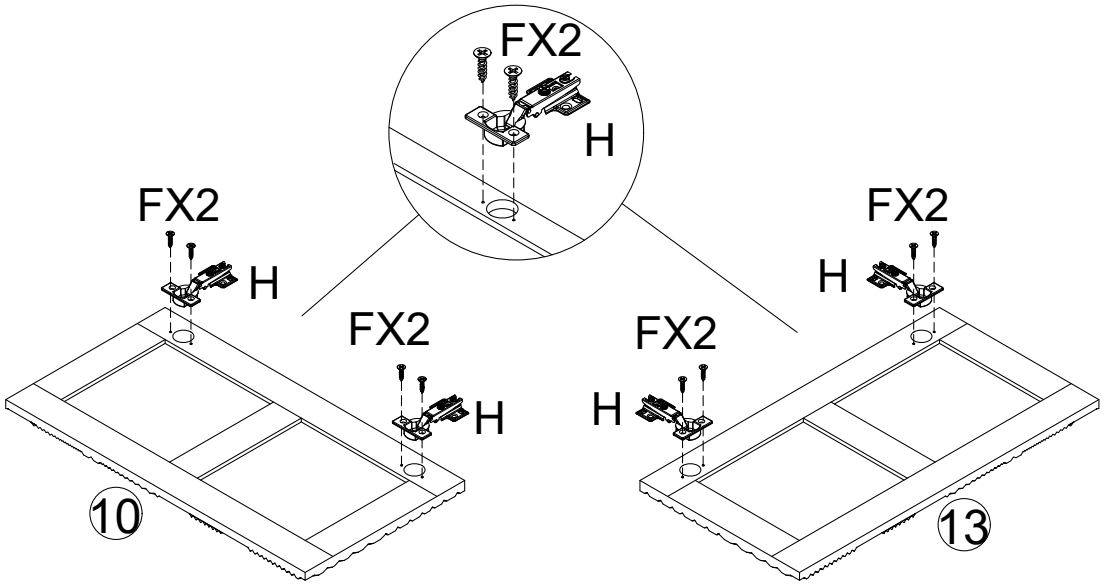
FX2
H
FX2
H
FX2
H
FX2
H
FX2
H
10
13

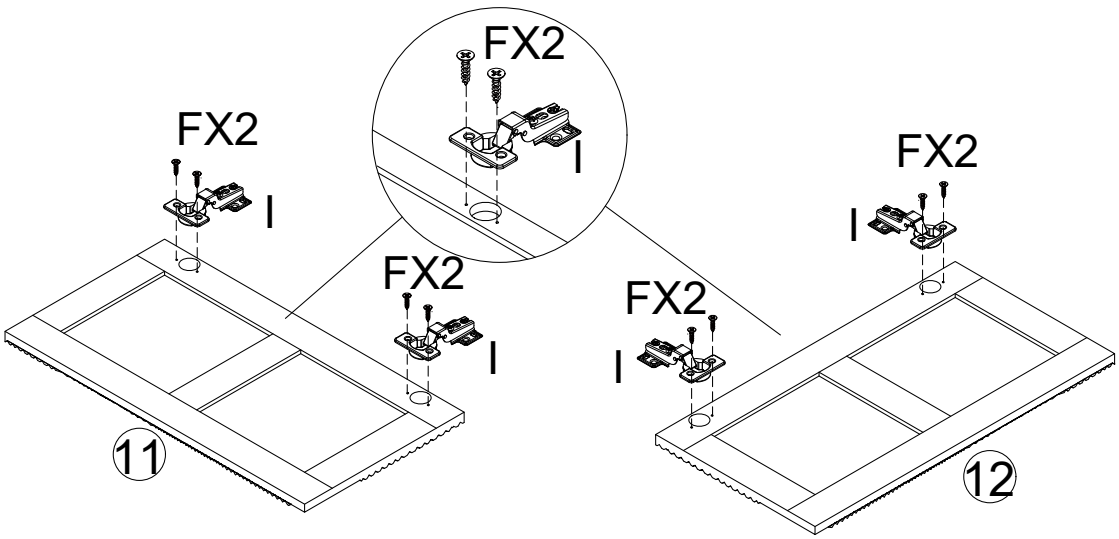
FX2
I
FX2
I
FX2
I
FX2
I
FX2
I
11
12

STEP 7

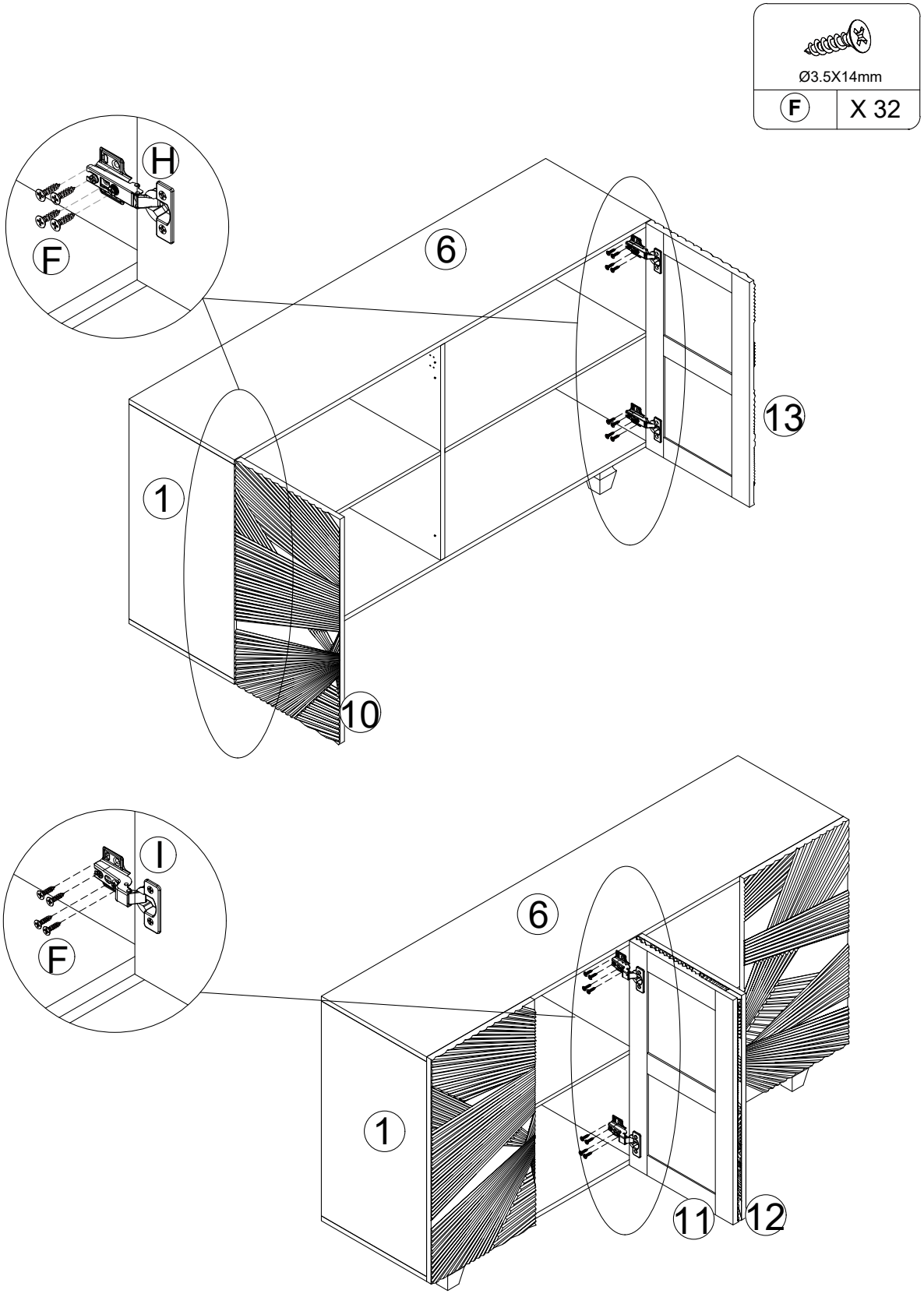

STEP 8

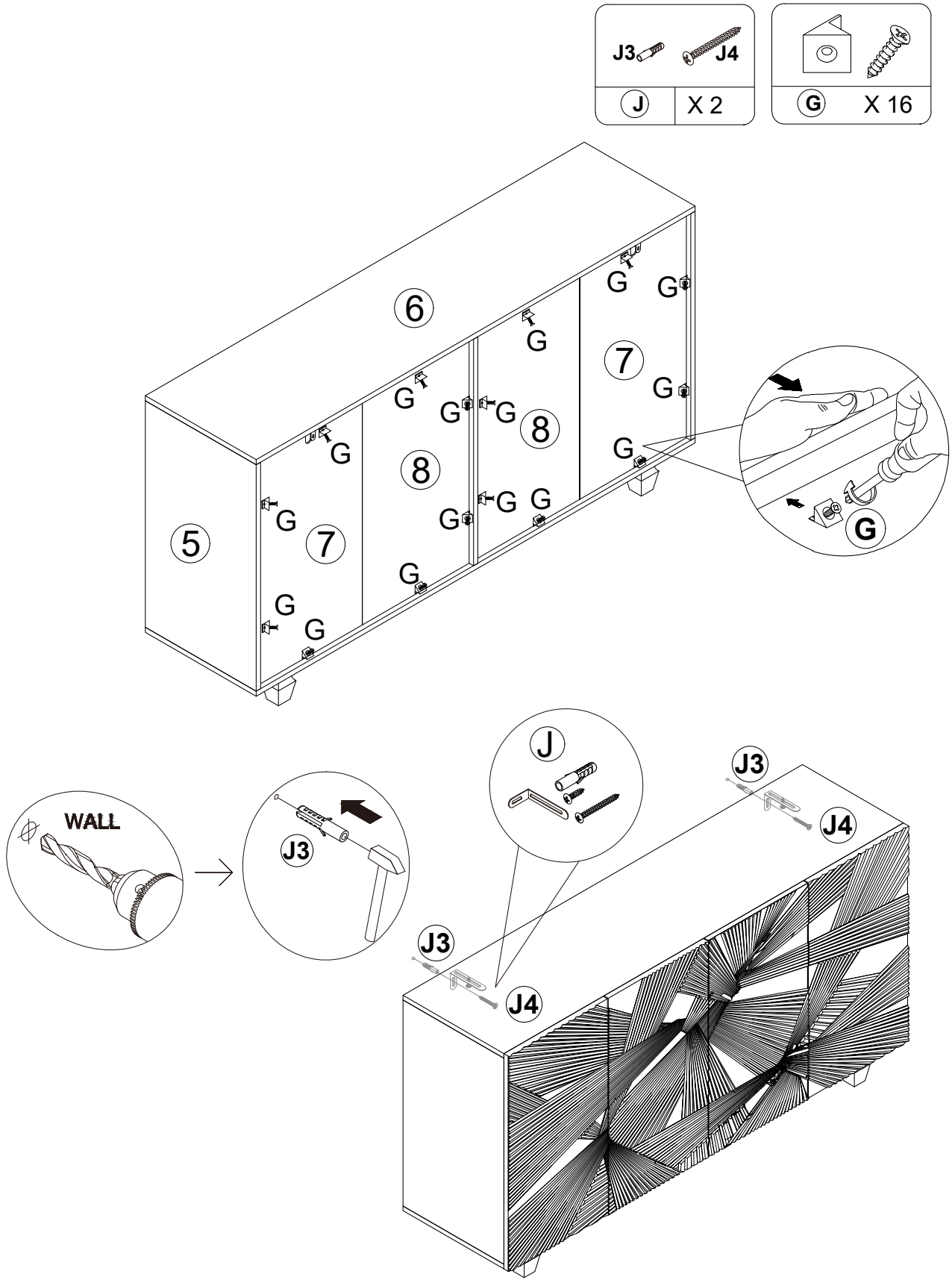

STEP 9

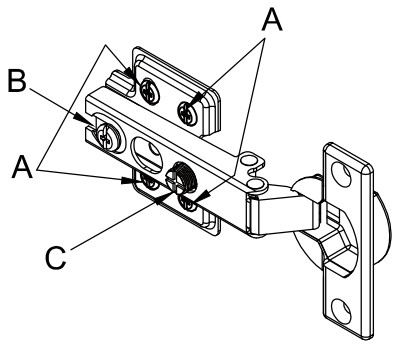

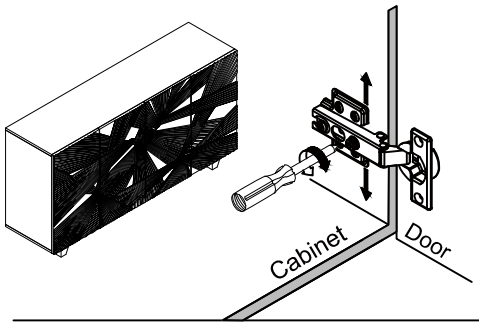

To adjust the vertical height.
Loosen the four screws "A" on both hinges.
Two of them are usually in slotted holes which allows you to adjust up or down by a few mm.
Then tighten back up.

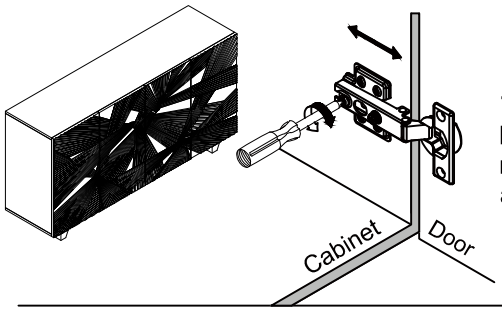

To adjust depth.
Loosen screw "B" and adjust door, if the door can not be adjusted, please loosen screw "C", then try again. Tighten screw "B" and "C".

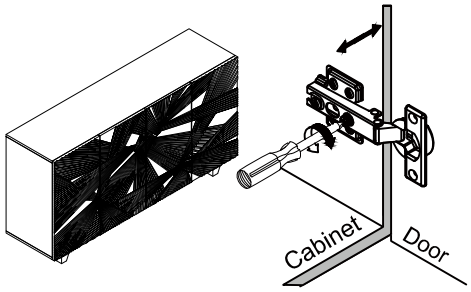

To adjust side ways.
Turning the screw "C" on BOTH hinges on each door.