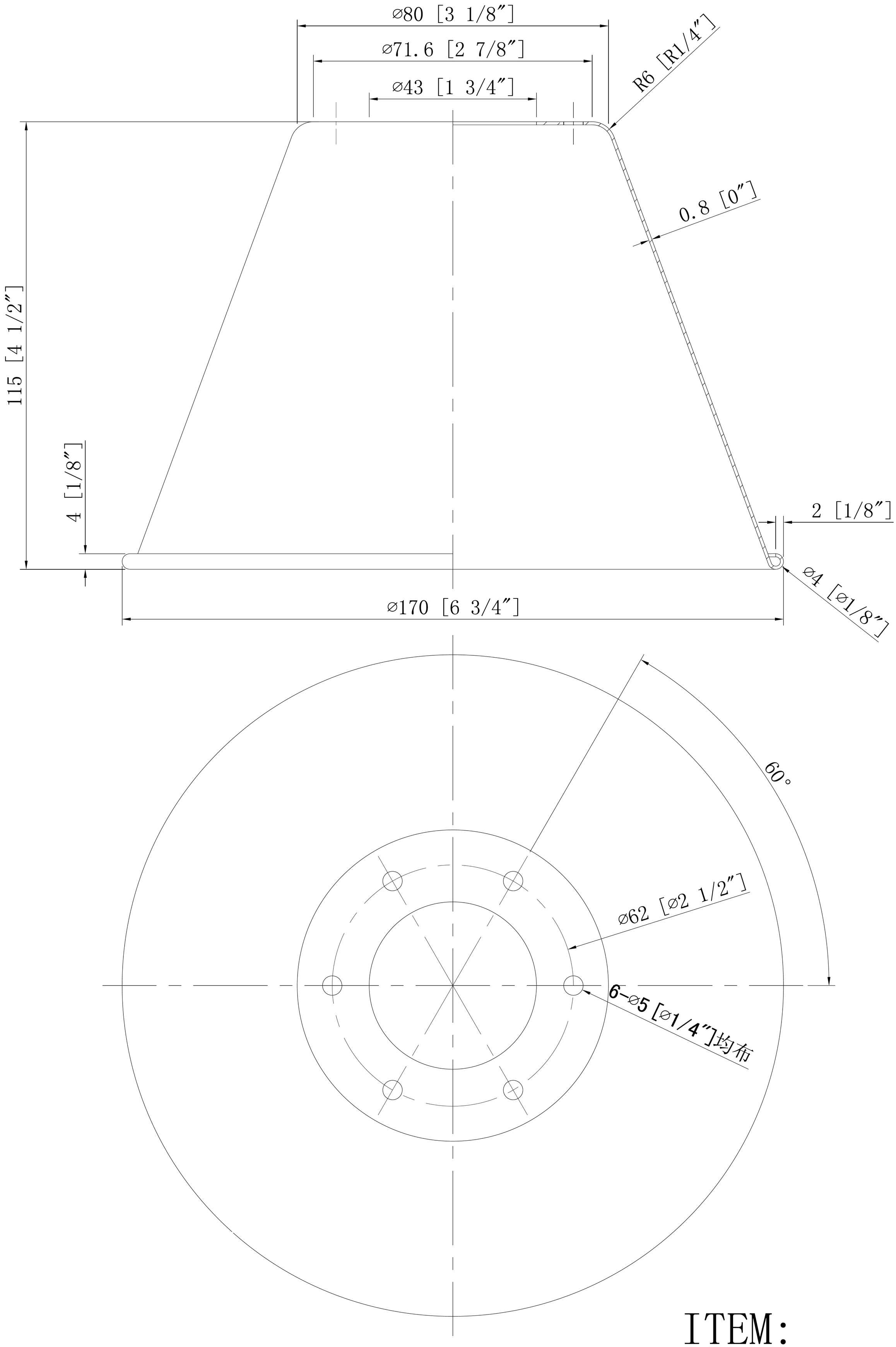
⌀80 [3 1/8″]
⌀71.6 [2 7/8″]
⌀43 [1 3/4″]
R6 [R1/4″]
0.8 [0″]
115 [4 1/2″]
4 [1/8″]
2 [1/8″]
⌀4 [⌀1/8″]
⌀170 [6 3/4″]
60°
⌀62 [⌀2 1/2″]
6-⌀5 [⌀1/4″]均布

ITEM: