ASSEMBLY INSTRUCTIONS
COASTER FINE FURNITURE

Fine Furniture for every stage of life

222901T (B1&B2)
Twin Bed

REVISION 0 : 07/13/2026

COASTERFURNITURE.COM

ITEM:222901T (B1&B2)

ASSEMBLY INSTRUCTIONS

ASSEMBLY TIPS:

1. Remove hardware from box and sort by size.
2. Please check to see that all hardware and parts are present prior to start of assembly.
3. Please follow attached instructions in the same sequence as numbered to assure fast & easy assembly.

WARNING!

1. Don't attempt to repair or modify parts that are broken or defective. Please contact the store immediately.
2. This product is for home use only and not intended for commercial establishments.

ASSEMBLY TIME	20 MINUTES

PARTS IDENTIFICATION

B1 (BOX 1)

A	HEADBOARD PANEL	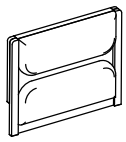	1PC
B	LEFT HEADBOARD LEG	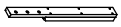	1PC
C	RIGHT HEADBOARD LEG	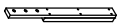	1PC
D	FOOTBOARD	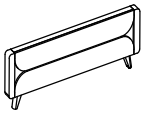	1PC
E	BED SLAT		4PCS

B2 (BOX 2)

F	BED RAIL		2PCS

NOTE:

Phillips head screw driver is required in the assembly process; however, manufacturer does not provide this item.

ITEM:222901T (B1&B2)

ASSEMBLY INSTRUCTIONS

ASSEMBLY TIPS:

1. Remove hardware from box and sort by size.
2. Please check to see that all hardware and parts are present prior to start of assembly.
3. Please follow attached instructions in the same sequence as numbered to assure fast & easy assembly.

WARNING!

1. Don't attempt to repair or modify parts that are broken or defective. Please contact the store immediately.
2. This product is for home use only and not intended for commercial establishments.

HARDWARE IDENTIFICATION

Z-B1 (BOX 1) - HARDWARE PACK IS LOCATED IN 222901T (B1)

1	**LONG BOLT** **(M8 x 40mm - BLK)**		**6PCS**
2	**LOCK WASHER** **(M8 - BLK)**		**6PCS**
3	**BIG FLAT WASHER** **(M8 x 18mm - RBW)**		**14PCS**
4	**SHORT BOLT** **(M8 x 20mm - BLK)**		**8PCS**
5	**ALLEN WRENCH** **(M5 x 65mm - BLK)**		**1PC**
6	**PAN HEAD SCREW** **(M4 x 30mm - BLK)**		**8PCS**

NOTE:
Phillips head screw driver is required in the assembly process; however, manufacturer does not provide this item.

ITEM:**222901T (B1&B2)**

ASSEMBLY INSTRUCTIONS

STEP 1

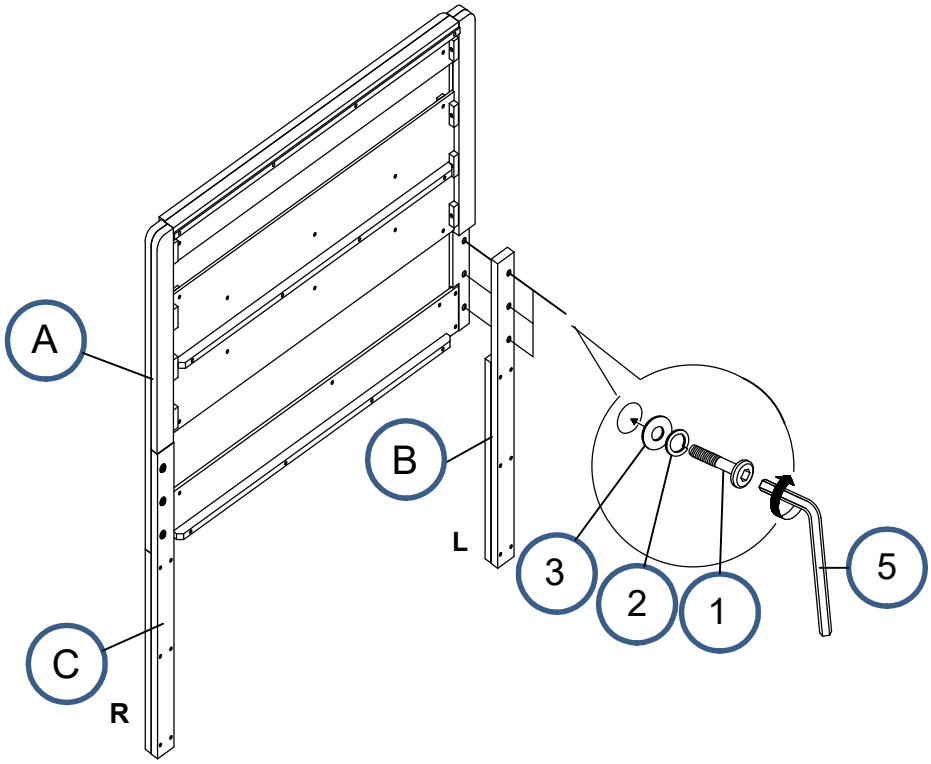

BACK VIEW

STEP 2

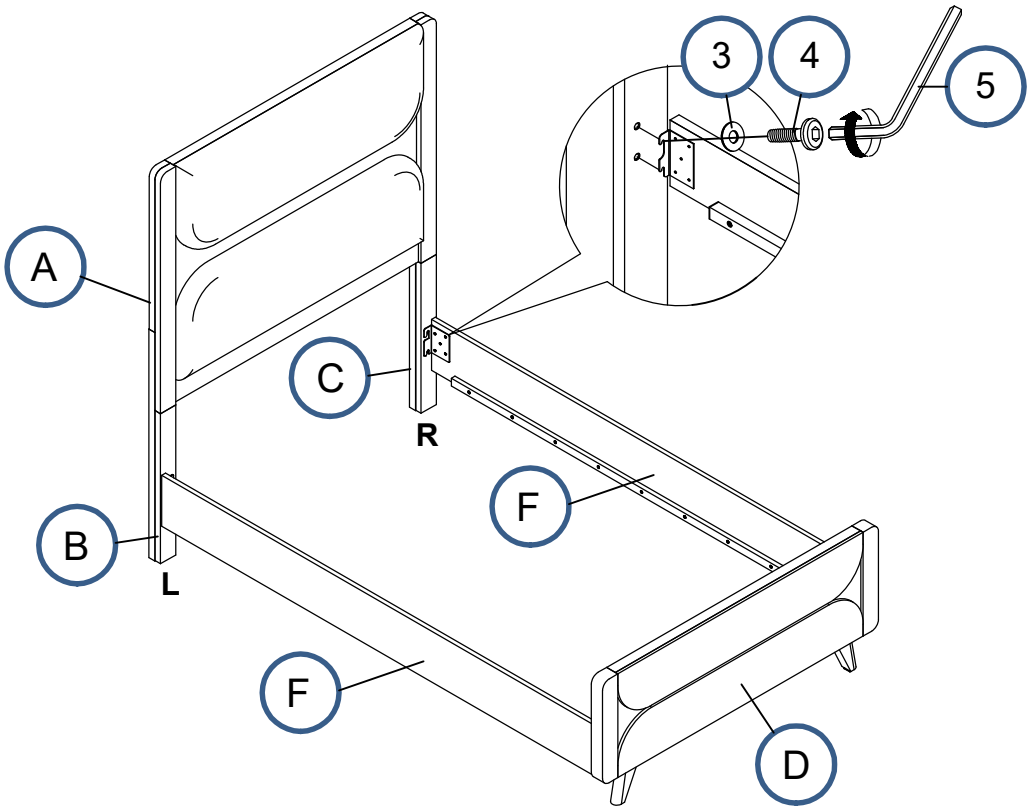

ITEM:**222901T (B1&B2)**

ASSEMBLY INSTRUCTIONS

STEP 3

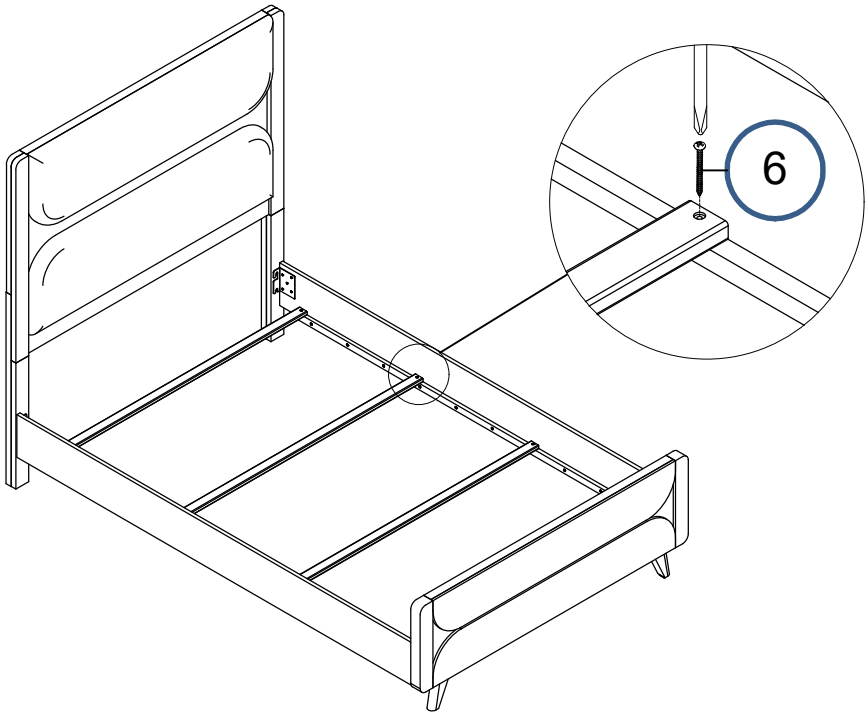

STEP 4

COMPLETE

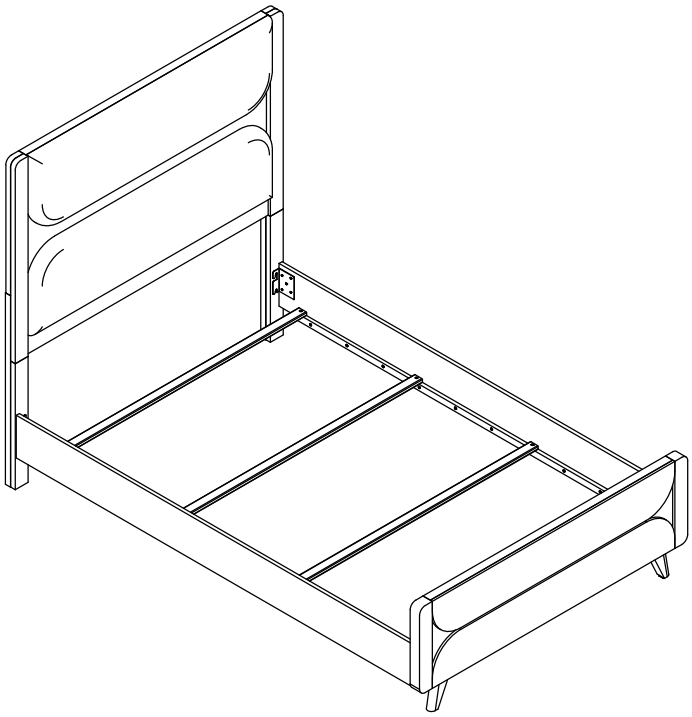

ITEM:222901T (B1&B2)

Inner Size : 39.50"W x 76.00"D

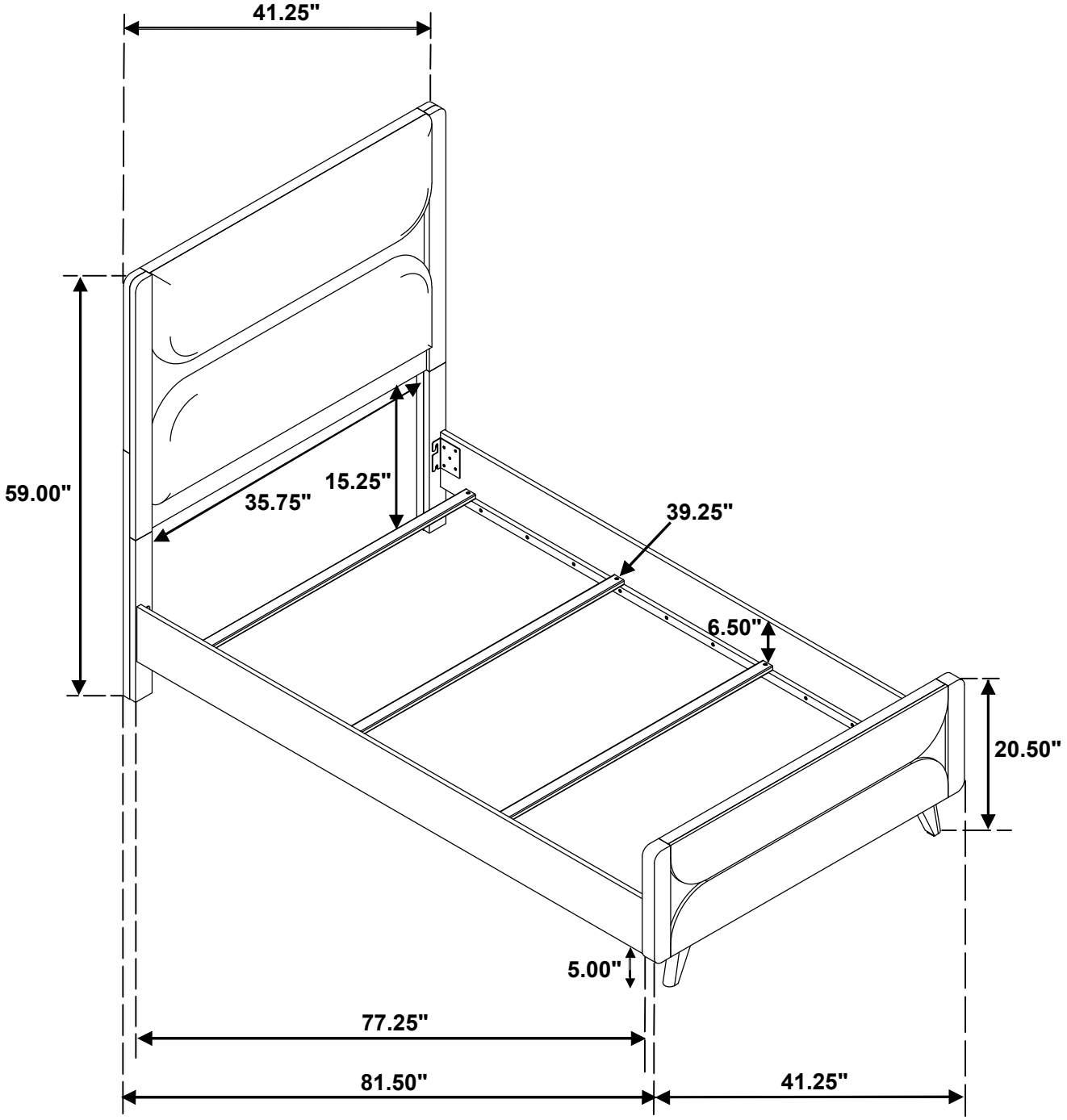

Note : Dimension tolerance ±5%

ASSEMBLY INSTRUCTIONS
COASTER FINE FURNITURE

Fine Furniture for every stage of life

222902
Nightstand

REVISION 0 : 12/25/2025

COASTERFURNITURE.COM

ITEM: **222902**

ASSEMBLY INSTRUCTIONS

ASSEMBLY TIPS:

1. Remove hardware from box and sort by size.
2. Please check to see that all hardware and parts are present prior to start of assembly.
3. Please follow attached instructions in the same sequence as numbered to assure fast & easy assembly.

WARNING!

1. Don't attempt to repair or modify parts that are broken or defective. Please contact the store immediately.
2. This product is for home use only and not intended for commercial establishments.

ASSEMBLY TIME	5 MINUTES

PARTS IDENTIFICATION

A	NIGHTSTAND	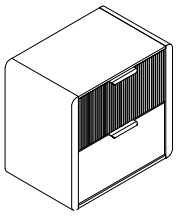	1PC
B	LEG		4PCS

HARDWARE IDENTIFICATION

1	BOLT (M6 x 16mm - BLK)	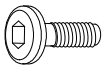	8PCS
2	LOCK WASHER (M6 - BLK)		8PCS
3	FLAT WASHER (M6 x 13mm - BLK)		8PCS
4	ALLEN WRENCH (M4 x 110mm - BLK)		1PC

ITEM: **222902**

ASSEMBLY INSTRUCTIONS

STEP 1

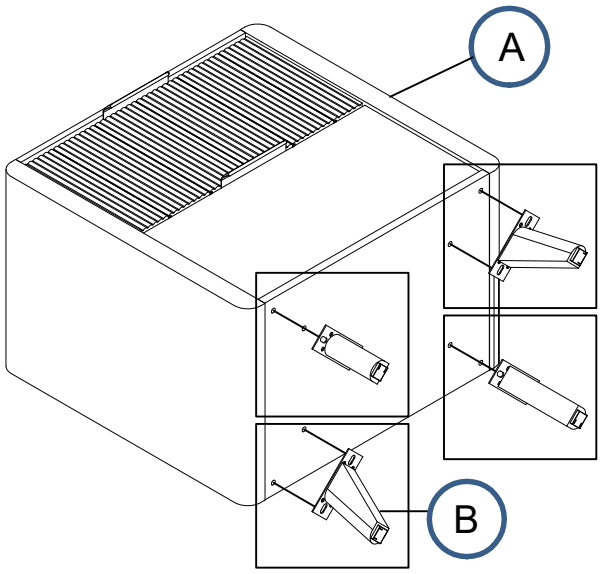

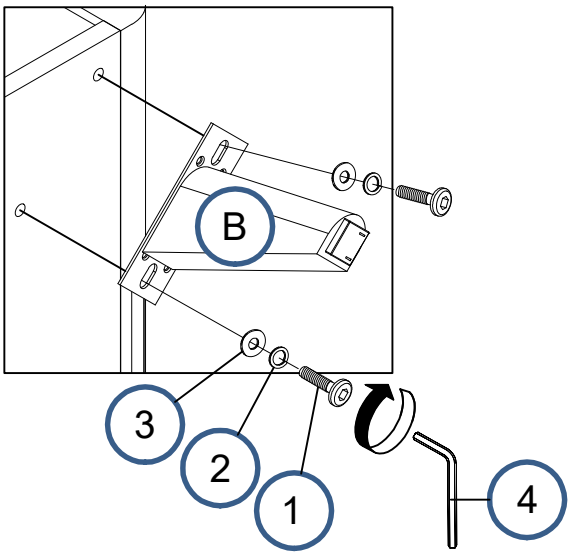

STEP 2
COMPLETE

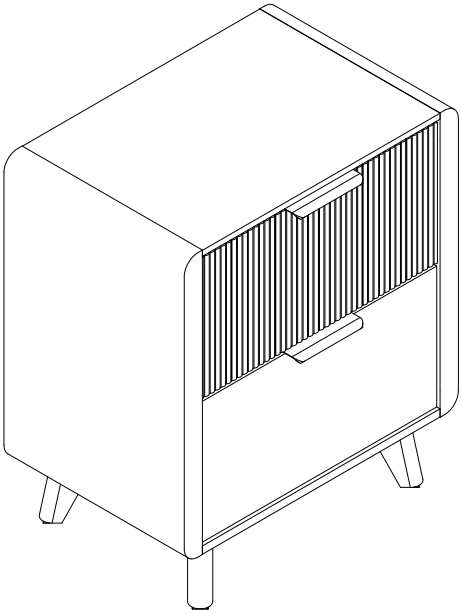

ITEM: **222902**

Inner Size Of Drawer: 16.25"W x 13.00"D x 7.00"H x 0.50"T

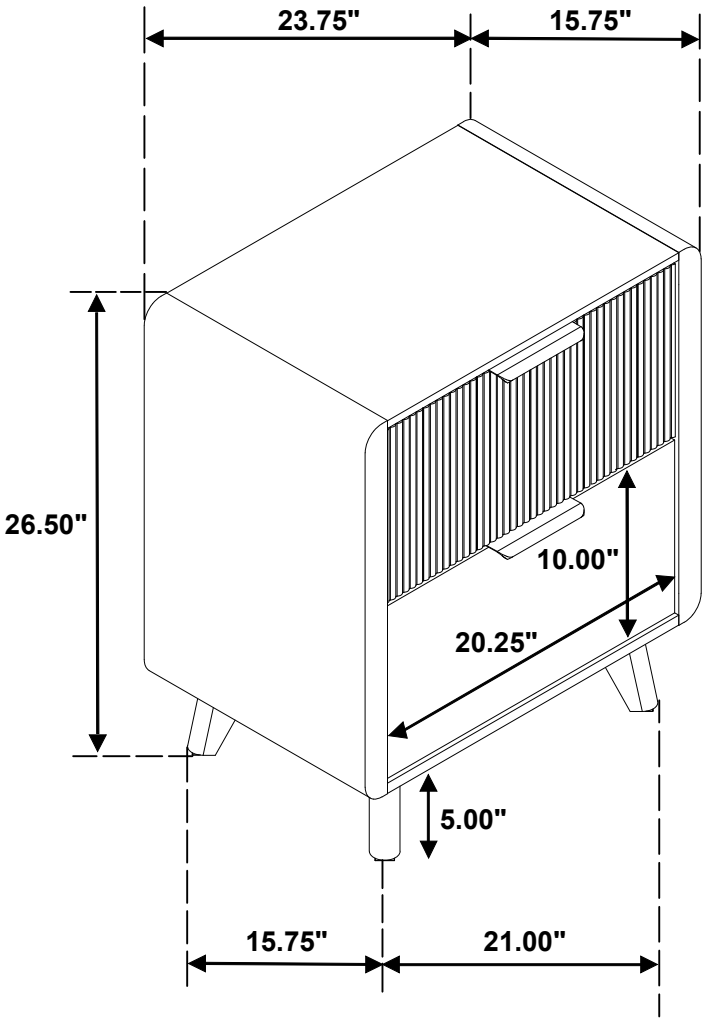

Note : Dimension tolerance ±5%

ASSEMBLY INSTRUCTIONS
COASTER FINE FURNITURE

Fine Furniture for every stage of life

222903
Dresser

REVISION 0 : 12/25/2025

COASTERFURNITURE.COM

ITEM: **222903**

ASSEMBLY INSTRUCTIONS

ASSEMBLY TIPS:

1. Remove hardware from box and sort by size.
2. Please check to see that all hardware and parts are present prior to start of assembly.
3. Please follow attached instructions in the same sequence as numbered to assure fast & easy assembly.

WARNING!

1. Don't attempt to repair or modify parts that are broken or defective. Please contact the store immediately.
2. This product is for home use only and not intended for commercial establishments.

ASSEMBLY TIME	5 MINUTES

PARTS IDENTIFICATION

A	DRESSER	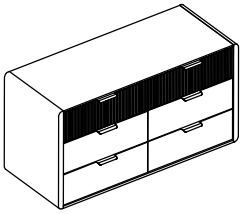	1PC
B	LEG		4PCS
C	CENTER SUPPORT LEG WITH LEVELER		1PC

HARDWARE IDENTIFICATION

1	BOLT (M6 x 15mm - BLK)	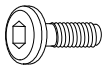	8PCS
2	LOCK WASHER (M6 - BLK)		8PCS
3	FLAT WASHER (M6 x 13mm - BLK)		8PCS
4	ALLEN WRENCH (M4 x 110mm - BLK)		1PC

ITEM: **222903**

ASSEMBLY INSTRUCTIONS

STEP 1

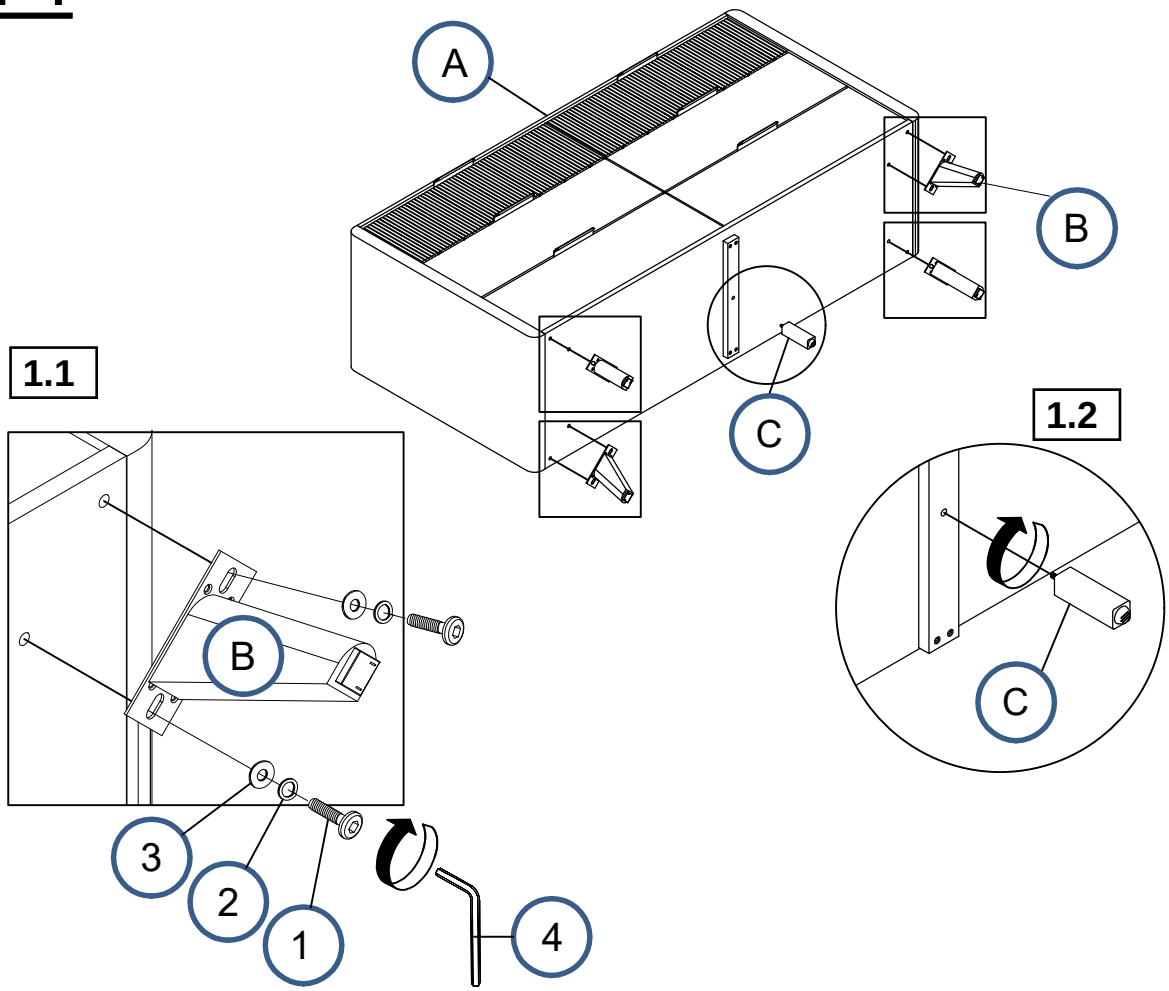

STEP 2
COMPLETE

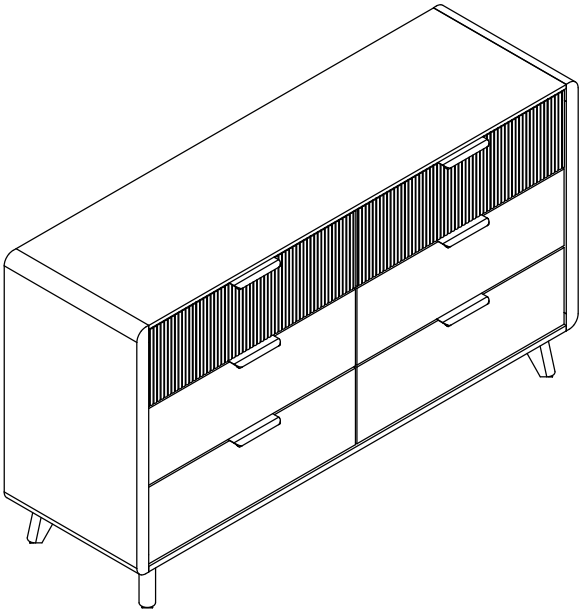

ITEM: **222903**

COASTER FINE FURNITURE

ANTI-TIPPING INSTALLATION INSTRUCTIONS

FURNITURE TIPPING RESTRAINT

WARNING

Injury may result from tipping furniture.

This restraint may protect against tipping furniture.

Do not allow children to climb on furniture.

This restraint is not a substitute for proper adult supervision.

Failure to detach this restraint before moving the furniture may result in injury and damage.

1. Attach one of the mounting brackets securely to the back edge of the unit, using the short screw.
2. Determine where the unit is to be placed, and mark the location on the wall for the other mounting bracket. The bracket on the wall needs to be approximately 2" below the bracket mounted to the edge of the unit.
3. Drill a hole in the wall. Insert the plastic wall anchor into the hole and if necessary, use a small block of wood and hammer to tap it in so that it's flush with the wall.
4. Attach the bracket over the plastic wall anchor using the long screw.
5. Place the unit against the wall, both brackets need to be facing each other.
6. Lace an end of the restraint strap through the hole in each bracket. Bring both ends together and rotate the thumb nut onto the threaded end until tight.
7. Ensure that the restraint strap is securely laced and locked.

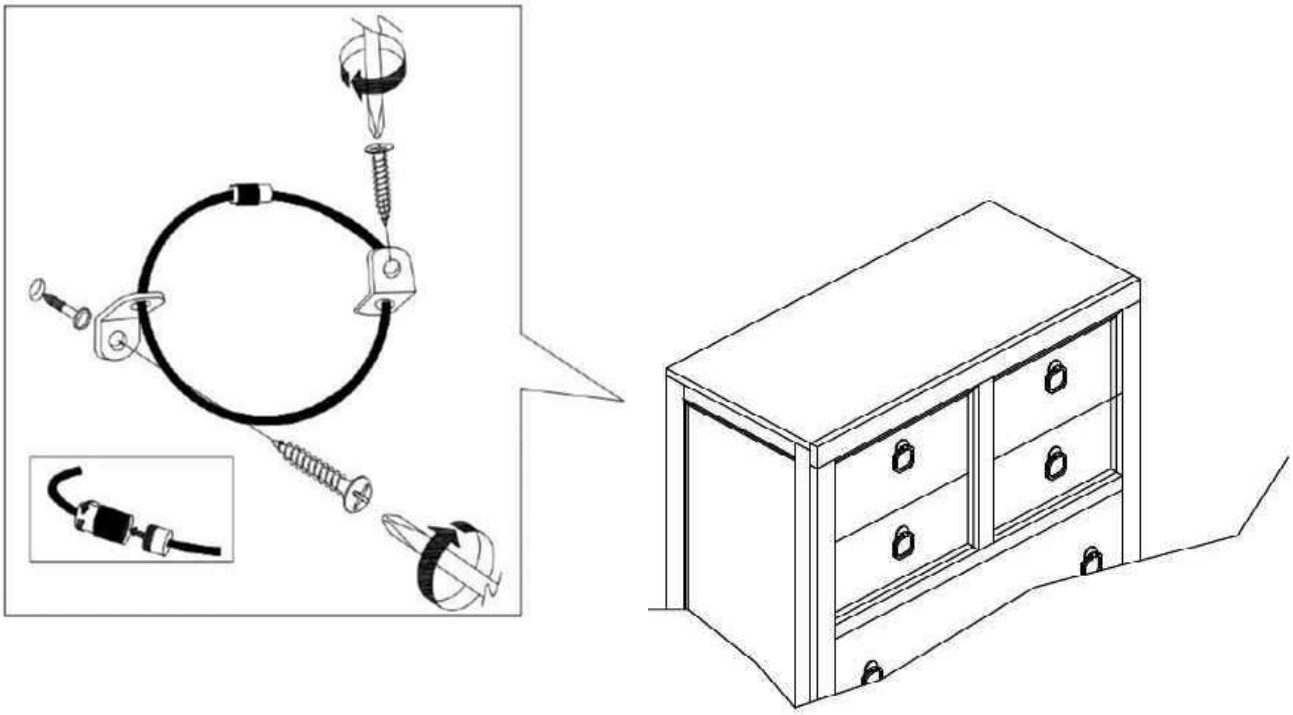

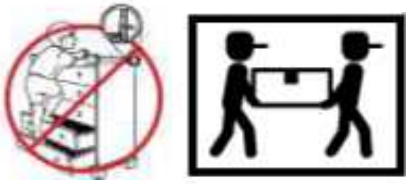

ITEM: **222903**

Inner Size Of Drawer: 24.25"W x 13.00"D x 6.25"H x 0.50"T

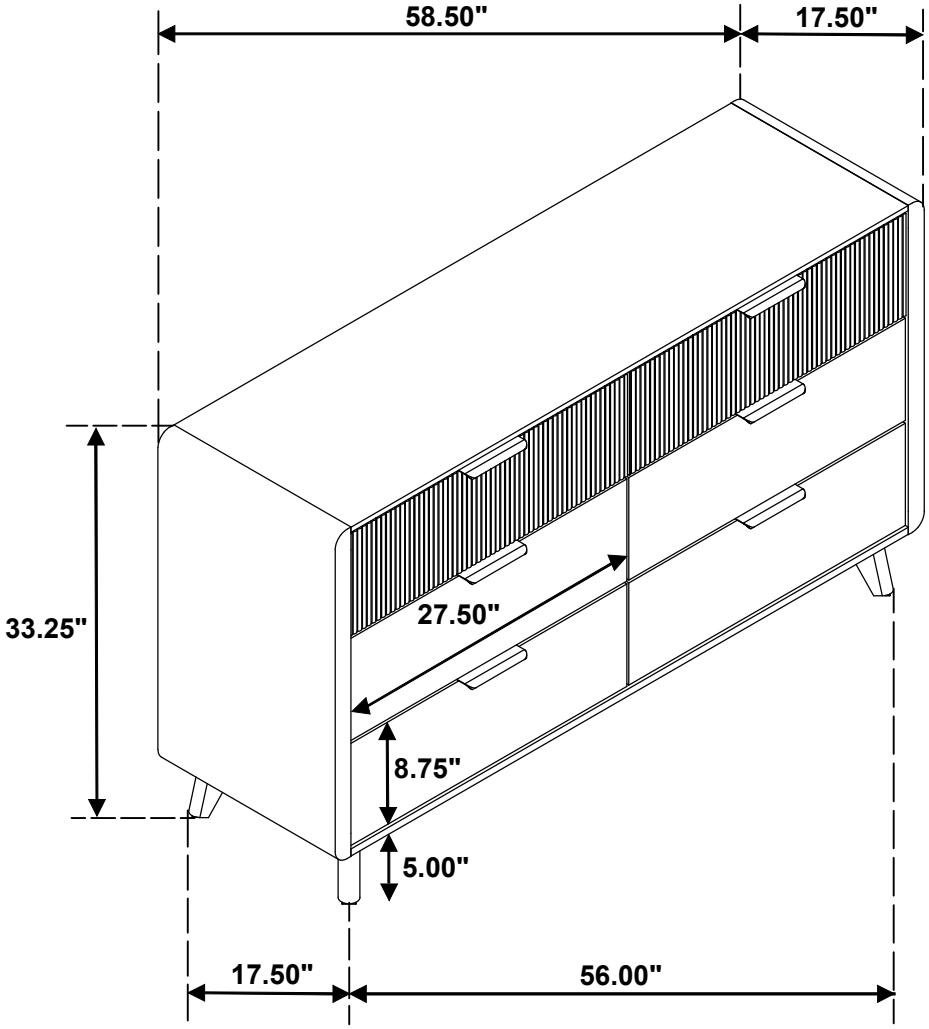

Note : Dimension tolerance ±5%

ASSEMBLY INSTRUCTIONS
COASTER FINE FURNITURE

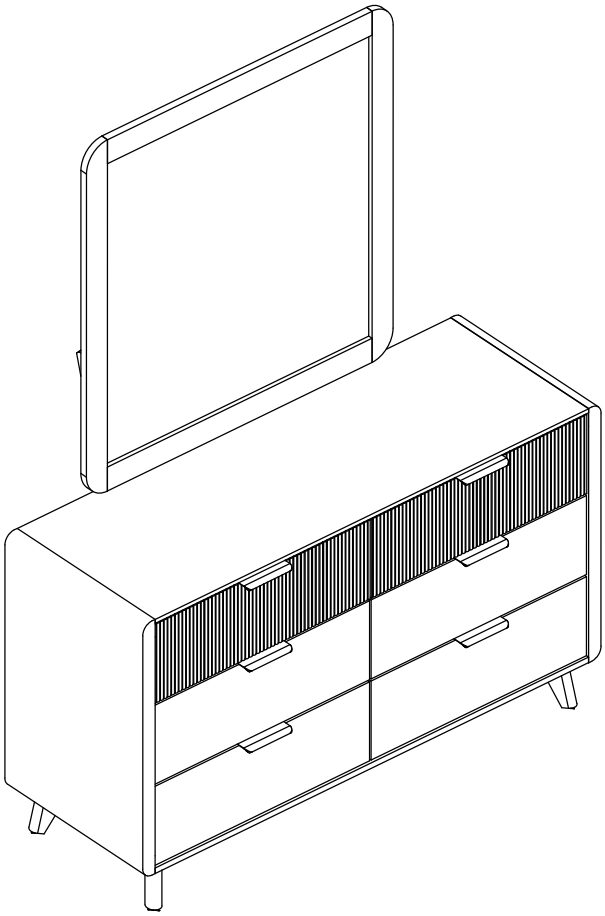

Fine Furniture for every stage of life

222904

Mirror

REVISION 0 : 12/25/2025

COASTERFURNITURE.COM

ITEM: **222904**

ASSEMBLY INSTRUCTIONS

ASSEMBLY TIPS:

1. Remove hardware from box and sort by size.
2. Please check to see that all hardware and parts are present prior to start of assembly.
3. Please follow attached instructions in the same sequence as numbered to assure fast & easy assembly.

WARNING!

1. Don't attempt to repair or modify parts that are broken or defective. Please contact the store immediately.
2. This product is for home use only and not intended for commercial establishments.

ASSEMBLY TIME	10 MINUTES

PARTS IDENTIFICATION

A	MIRROR	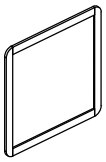	1PC
B	MIRROR SUPPORT (PACKED WITH MIRROR)		2PCS
C	DRESSER FROM BOX ITEM# 222903		1PC

HARDWARE IDENTIFICATION

1	BOLT (M6 x 35mm - BLK)	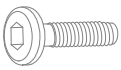	4PCS
2	FLAT WASHER (M8 x 18mm - BLK)		4PCS
3	LOCK WASHER (M8 - BLK)		4PCS
4	ALLEN WRENCH (M4 - BLK)		1PC
5	PAN HEAD SCREW (M4 x 30mm - BLK)		4PCS

NOTE:

Phillips head screw driver is required in the assembly process; however, manufacturer does not provide this item.

ITEM: **222904**

ASSEMBLY INSTRUCTIONS

STEP 1

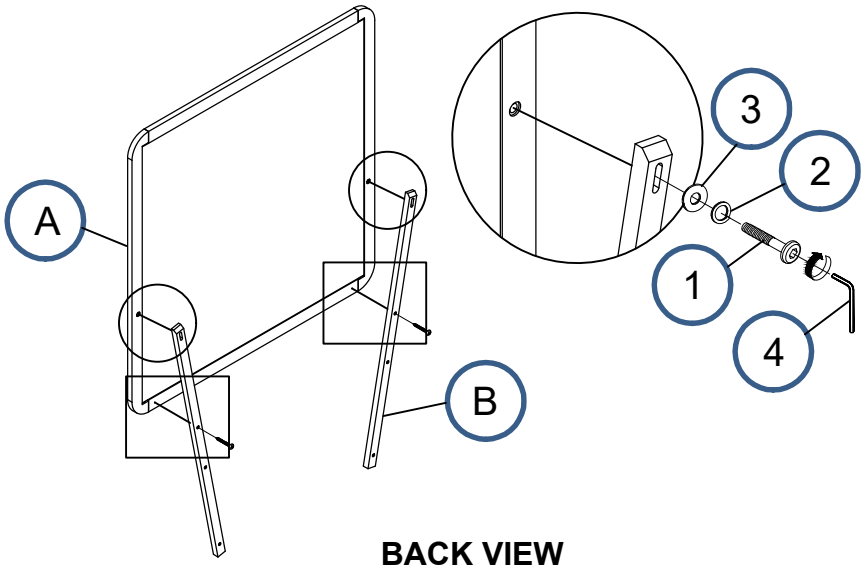

BACK VIEW

STEP 2

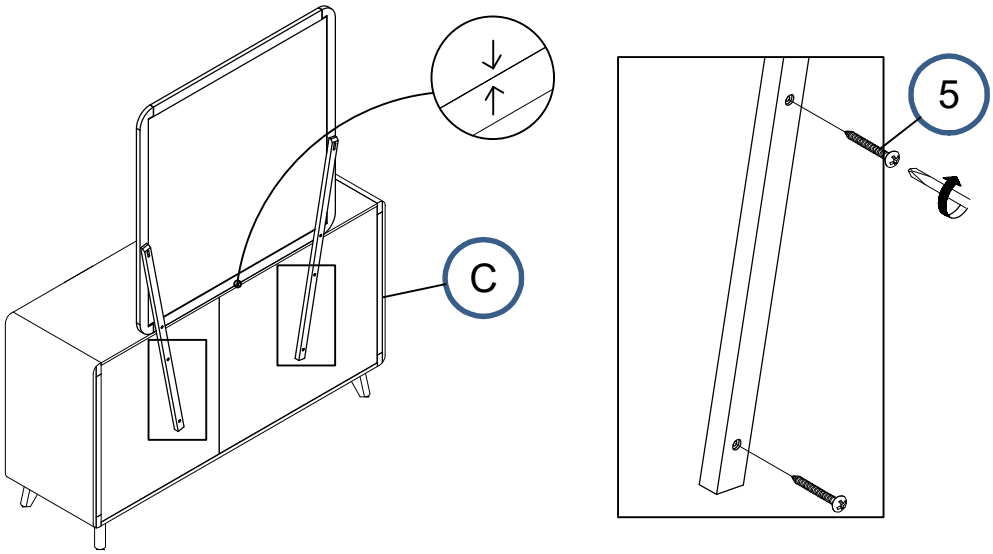

STEP 3
COMPLETE

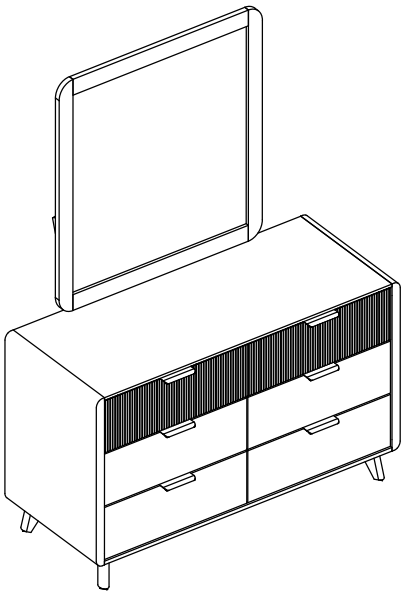

ITEM: **222904**

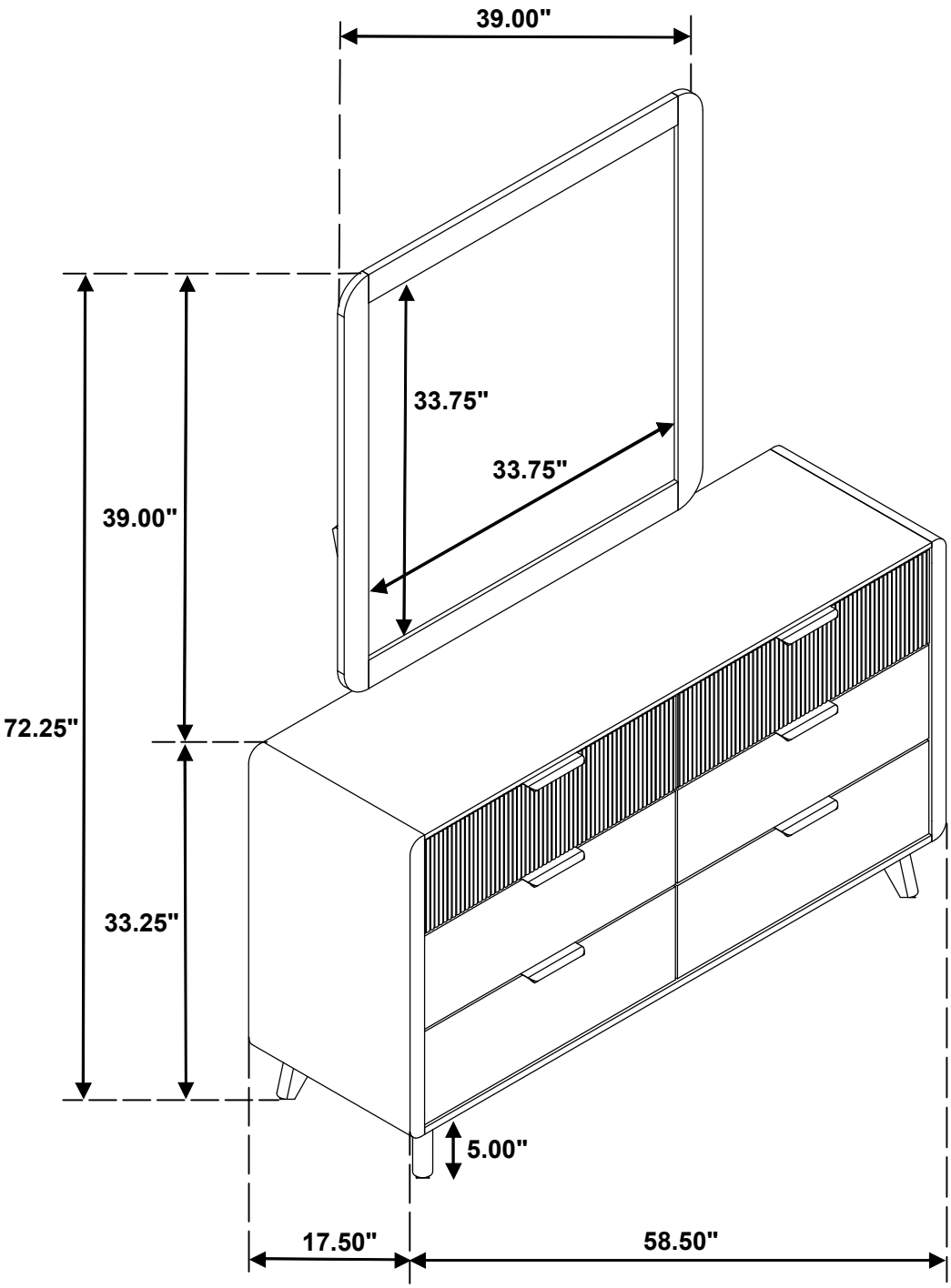

Note : Dimension tolerance ±5%