ASSEMBLY INSTRUCTION

PARTS LIST

Ax1	Bx1	Cx2	D1x1	D2x1	Ex2	Fx4
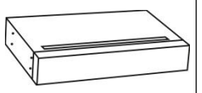	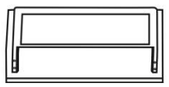				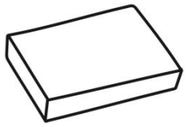	
Seat Frame	Back Frame	Armrest	Back Cushion（L)	Back Cushion（R)	Seat Cushion	Legs

HARDWARE

①Washer X 12	②Screws（8X60）X 12	③Gasket X4	④Wrench X1

Installation Steps

DIAGRAM 1 (Assemble the Armrest)

Assemble the Left and Right Armrests(Part C) to the Seat Frame(Part A) with Washers(Hardware 1) and Screws(Hardware 2).

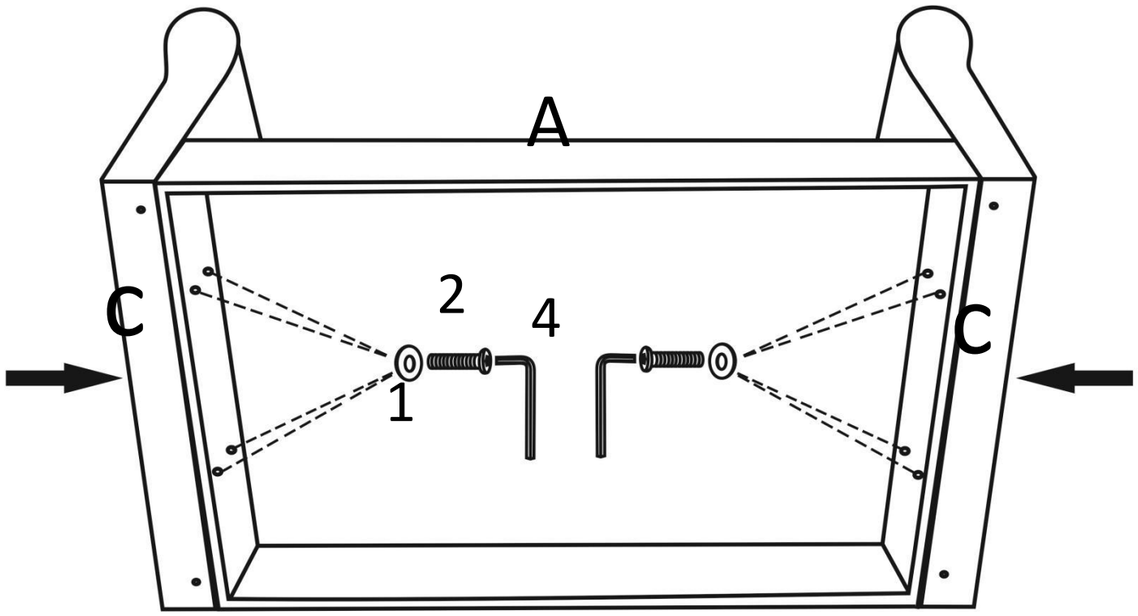

DIAGRAM 2 (Assemble the Legs)

Assemble the Legs(Part F) on Seat frame (Part A) with Gaskets(Hardware 3).

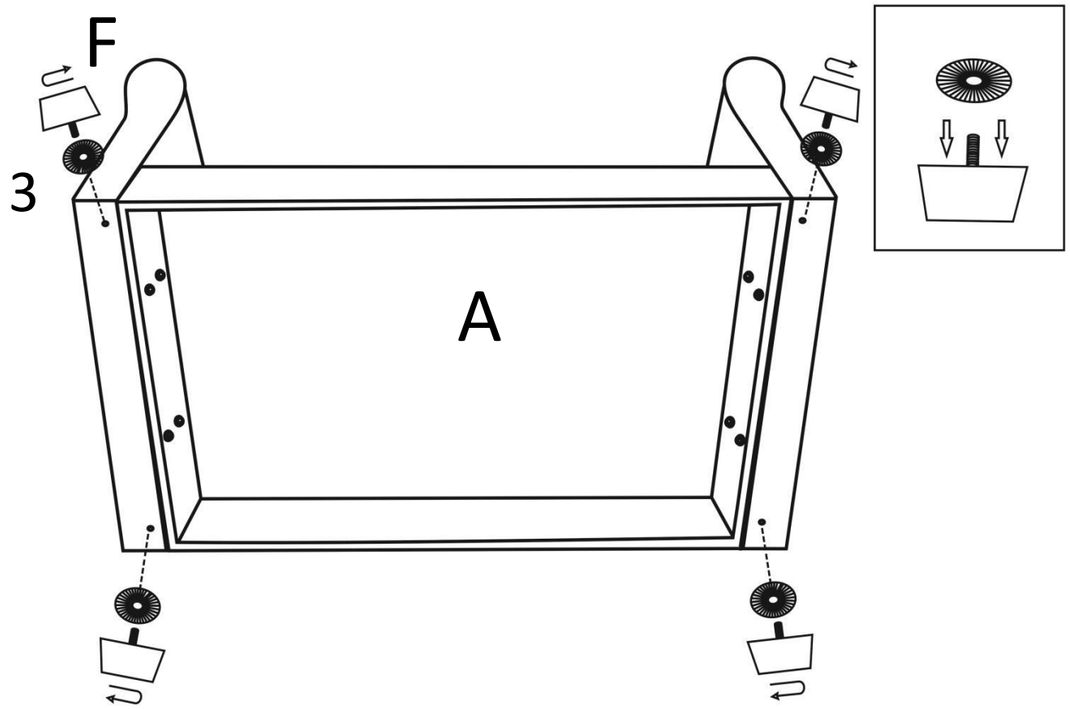

ASSEMBLY INSTRUCTION

DIAGRAM 3 (Assemble the Back Frame)

Insert the Back Frame(Part B) into the designated holes,using Washers (Hardware 1) and Screws(Hardware 2) to 70% tightness,and then tighten the all Screws on the seat.

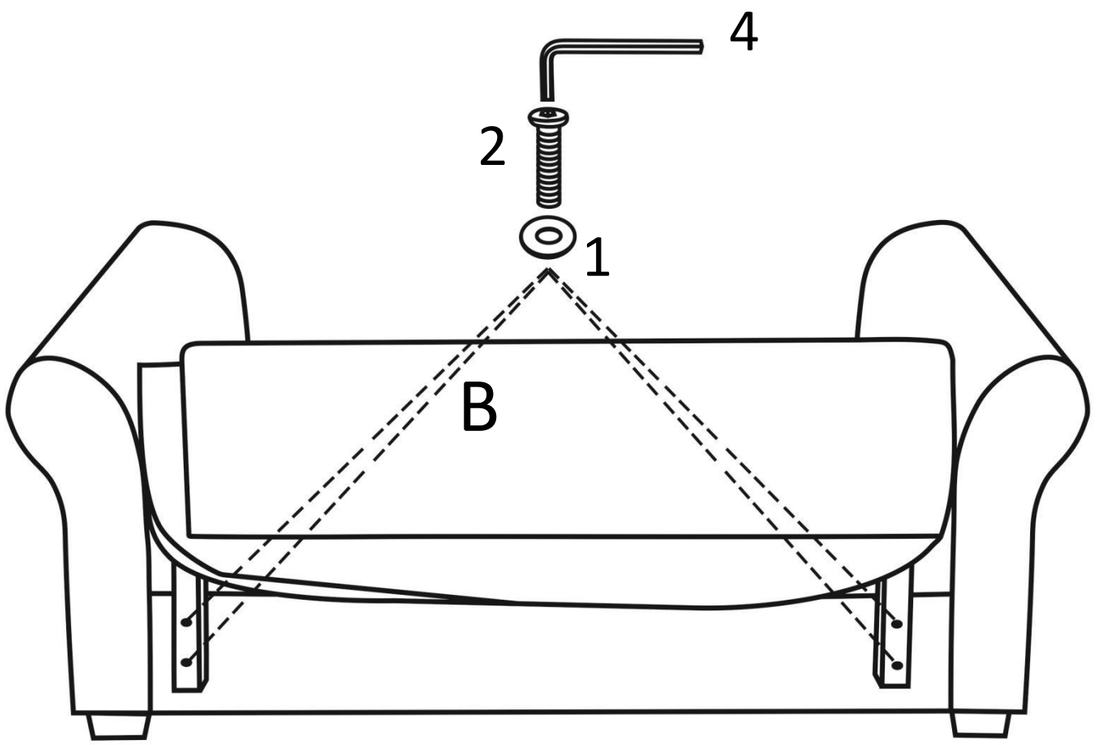

DIAGRAM 4(Assemble the Back Cushion and the Armrest bags)

Open the compressed packages.

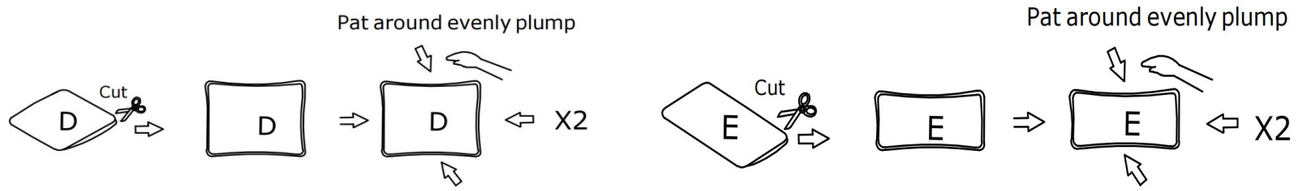

Placing the Back Cushions ((Part D1 and D2) and Set Cushions (Part E) as shown in the figure.

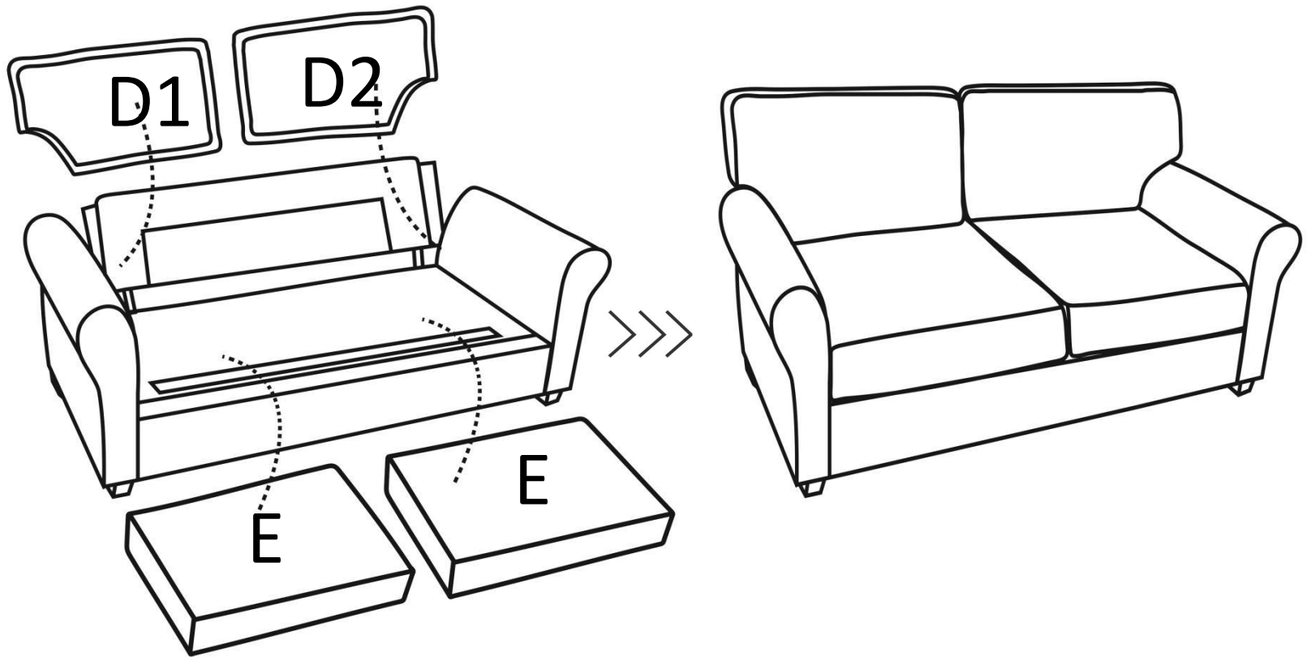

TIPS:

1.Please do not open the compress packaging until your sofa frame is completely assembled.
2.Compress back cushions and pillows need to be fully fulfilled within 72 hours for your perfect use.
3.Please keep children away from plastic bags or any small pieces of stuff.