ASSEMBLY INSTRUCTIONS

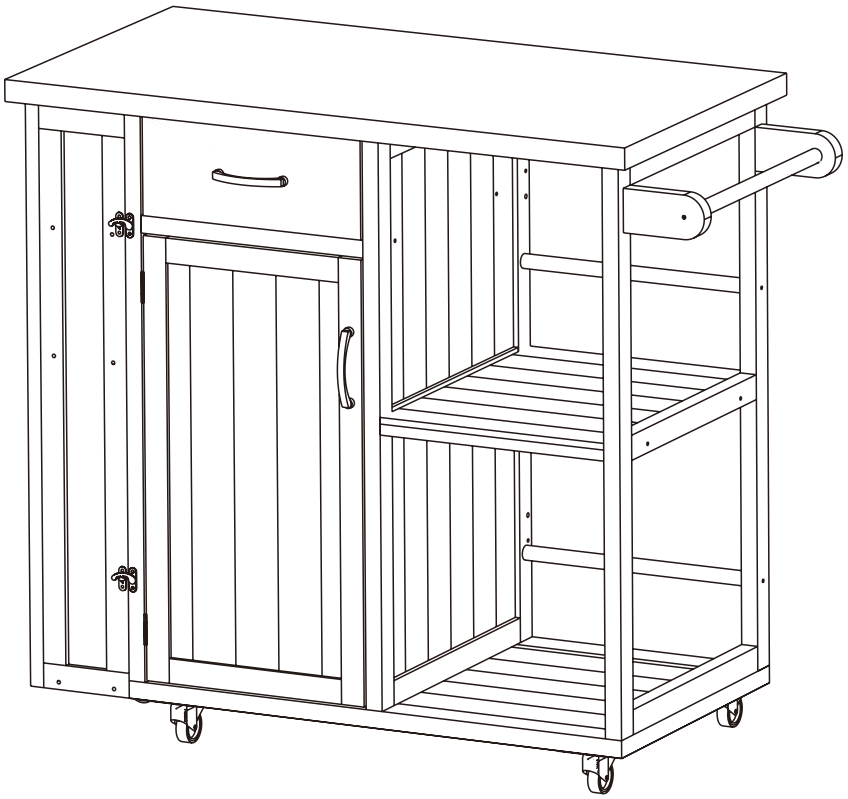

IMPORTANT NOTE:

① PLACE ALL PARTS ON A CLEAN AND SMOOTH SURFACE SUCH AS A RUG OR CARPET TO AVOID THE PARTS FROM BEING SCRATCHED.

② BEFORE YOU BEGIN,KINDLY FOLLOW THE ASSEBLY INSTRUCTIONS STEP BY STEP.

③ DO NOT TIGHTEN ALL SCREWS AND BOLTS UNTIL THIS ITEM IS FULLY SET-UP.

Detail View

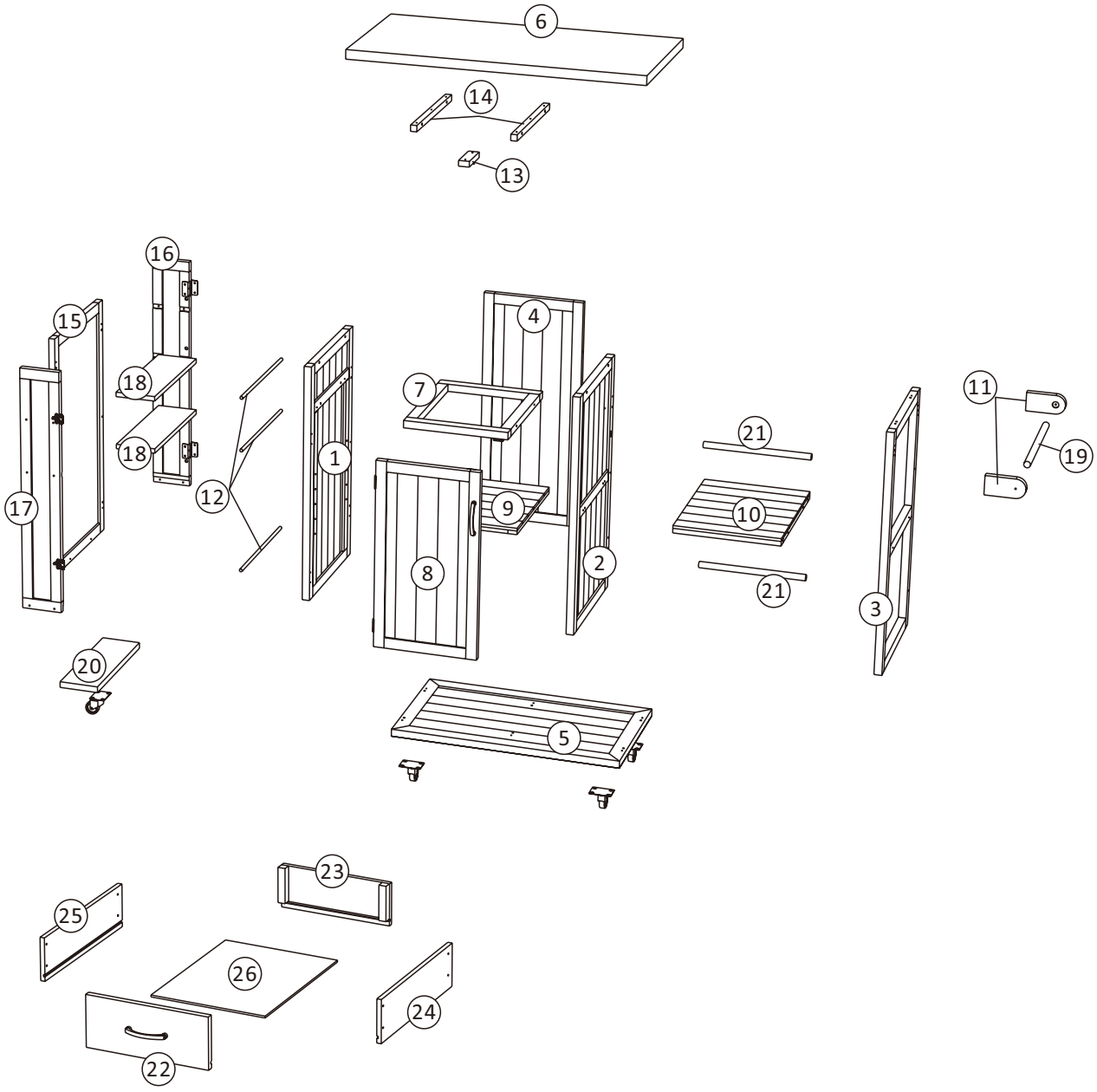

1 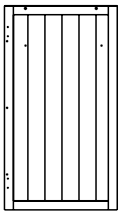	2 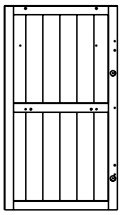	3 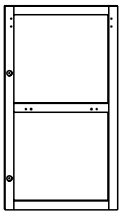	4 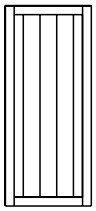
1x	1x	1x	1x
5 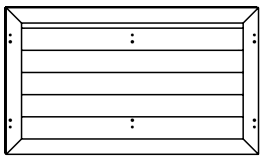	6 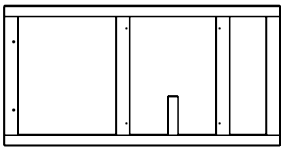	7 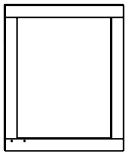	8 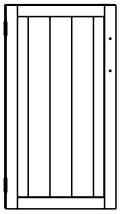
1x	1x	1x	1x
9 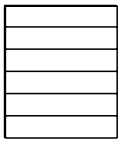	10 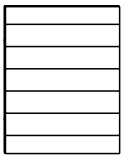	11 	12
1x	1x	2x	3x
13 	14 	15 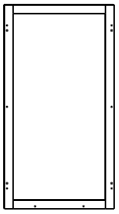	16 
1x	2x	1x	1x
17 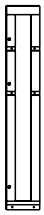	18 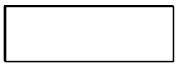	19	20 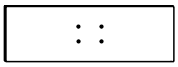
1x	2x	1x	1x
21	22 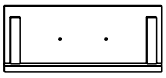	23 	24 
2x	1x	1x	1x
25 	26 		
1x	1x		

Hardware List

A ⌀3.5*60 2x	B ⌀3.5*45 23x	C ⌀3.5*40 36x	D ⌀3.0*28 8x
E ⌀3.0*16 19x	F ⌀6.0*50 4x	G ⌀6.0*20 20x	H 26x
I 4x	J 1x	K 1x	L 2x
M 2x	N 4x	O 1x	P 1x

ASSEMBLY TOOLS REQUIRED(NOT INCLUDED)

PLEASE BE CAREFUL DO NOT DAMAGE THE HOLE POSITION WHEN YOU USE POWERTOOLS !

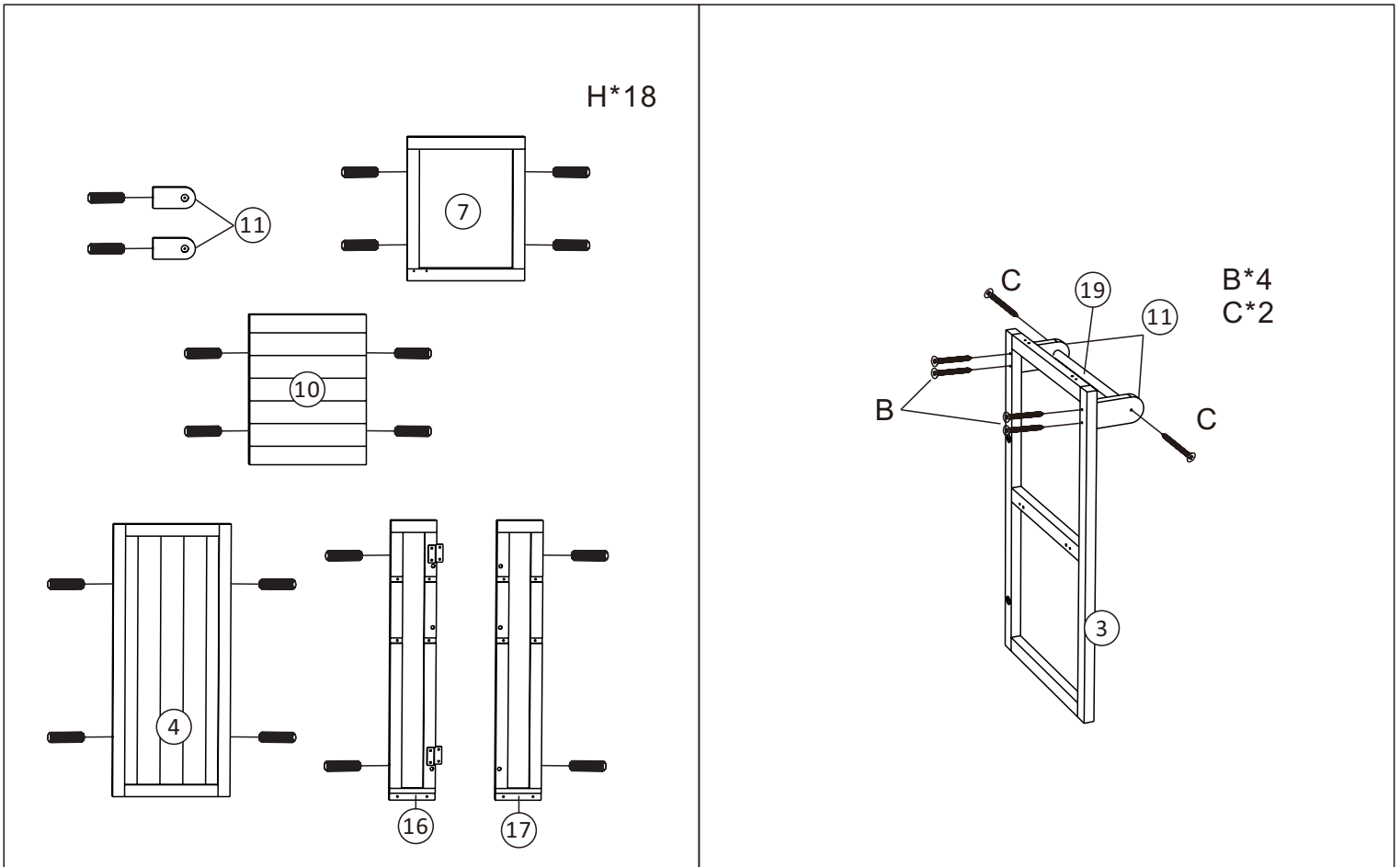

H*18

3.5*45MM	3.5*40MM
B*4	C*2

1

2

B*2

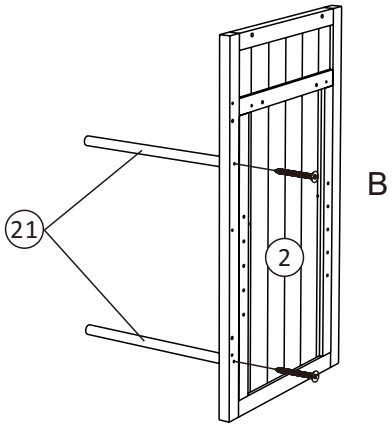

3.5*45MM
B*2

3

B*3
C*2
E*2
J*1

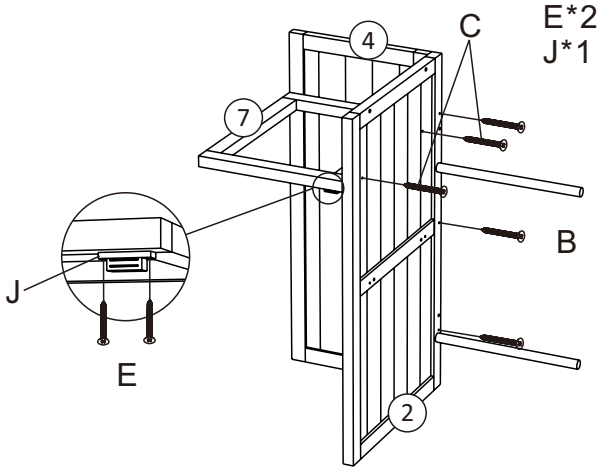

		3.5*45MM
		B*3
3.5*40MM	3.0*16MM	
C*2	E*2	J*1

4

B*3
C*2

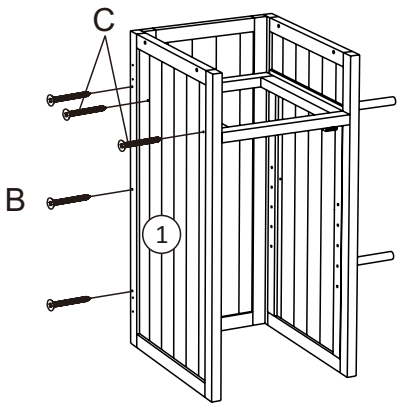

3.5*45MM	3.5*40MM
B*3	C*2

5

B*4
C*2

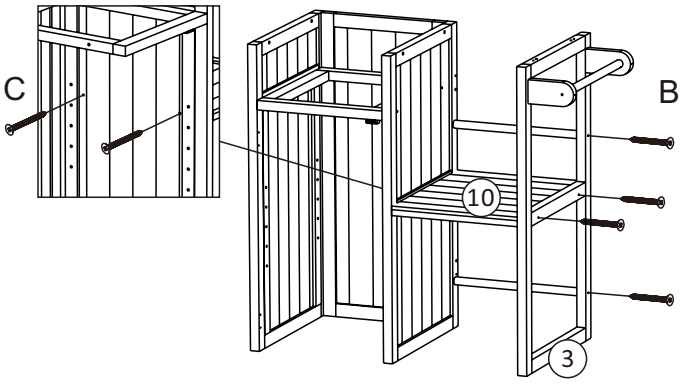

3.5*45MM	3.5*40MM
B*4	C*2

6

7

H*8

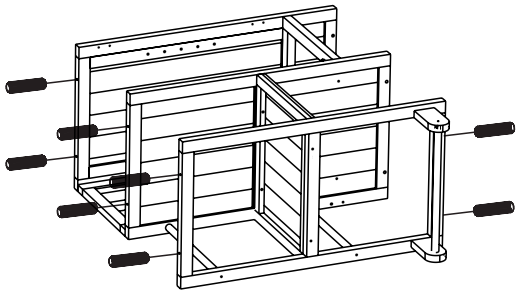

H*8

8

B*7

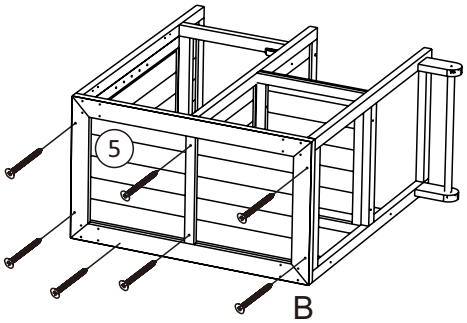

3.5*45MM
B*7

9

C*8
E*1
K*1

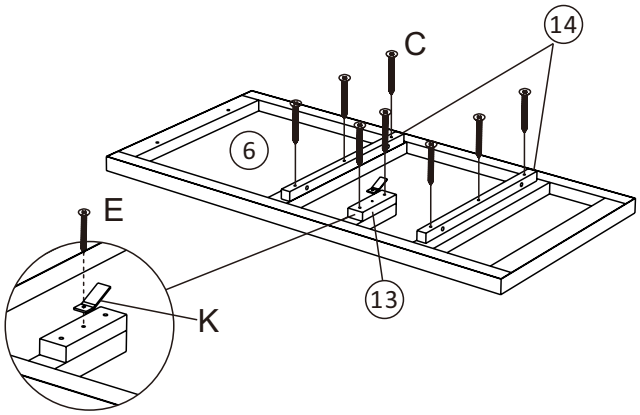

3.5*40MM	3.0*16MM	
C*8	E*1	K*1

10

P*1

A*2
F*4

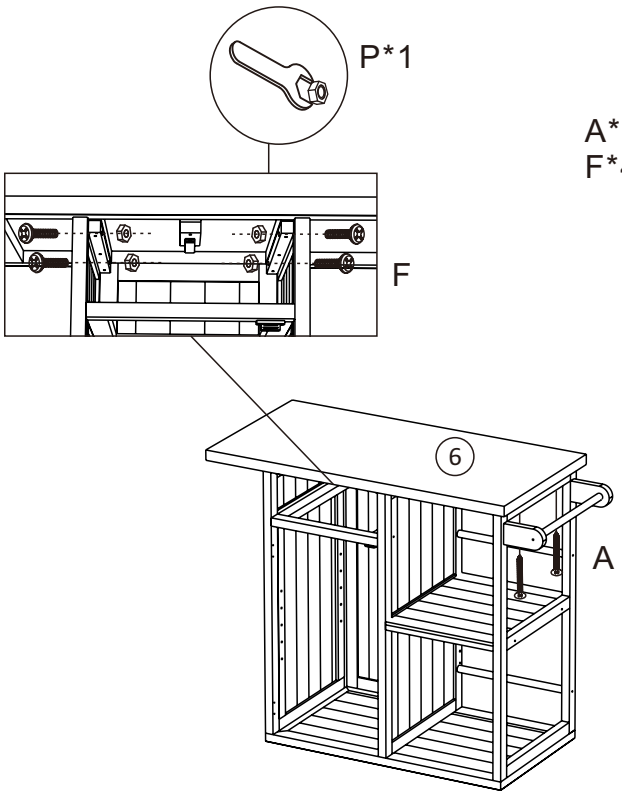

3.5*60MM	6.0*50MM	
A*2	F*4	P*1

I*4

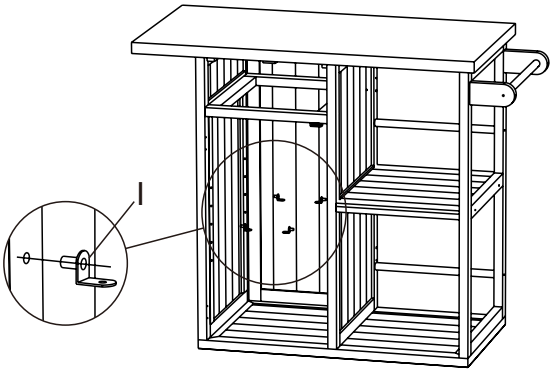

11

I*4

E*4
L*1

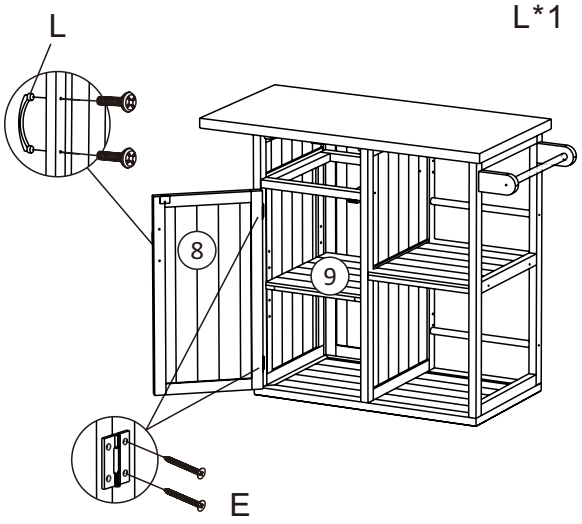

12

3.0*16MM	
E*4	L*1

D*8
L*1

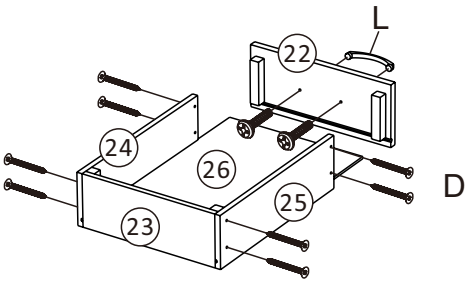

13

3.0*28MM	
D*8	L*1

C*12

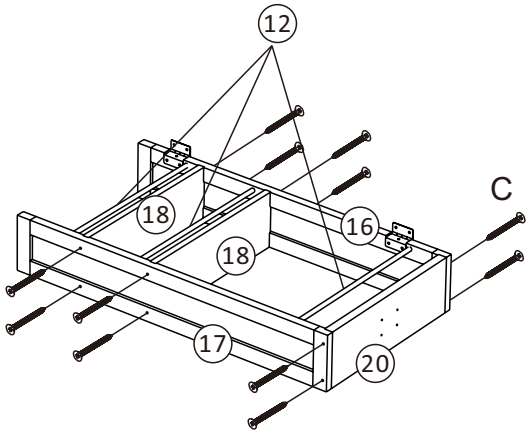

14

3.5*40MM
C*12

C*8

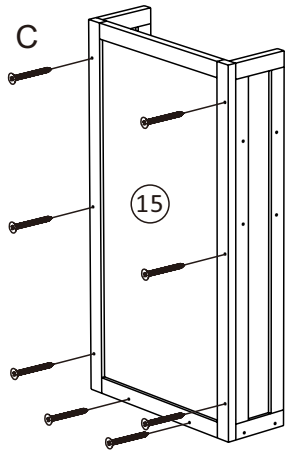

15

3.5*40MM
C*8

E*4

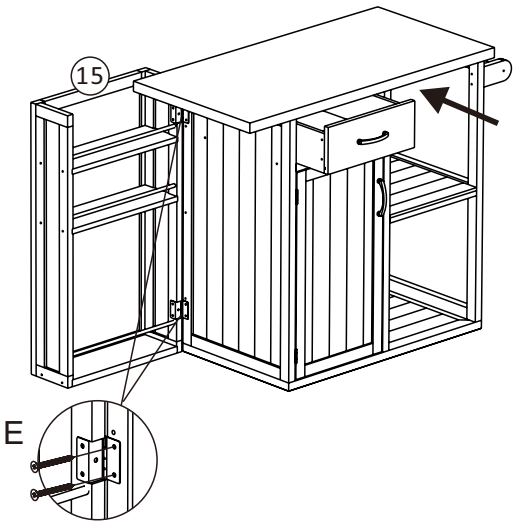

16

3.0*16MM
E*4

G*20
N*4
O*1

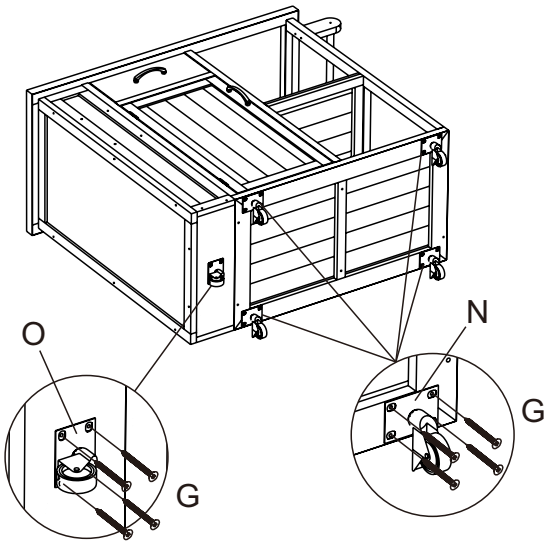

17

6.0*20MM		
G*20	N*4	O*1

E*8
M*2

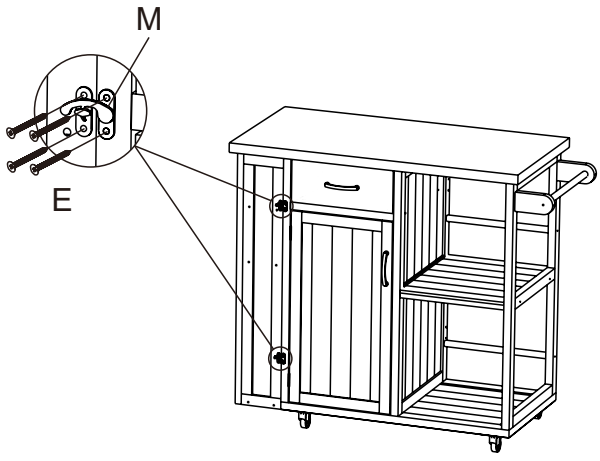

18

3.0*16MM	
E*8	M*2