Dog Crate

Assembly Instruction – Please keep properly for future reference.

If you find any missing boxes, damaged parts, or accessory shortages, please contact the customer service team of your purchasing channel immediately. We will resolve the issue as quickly as possible.

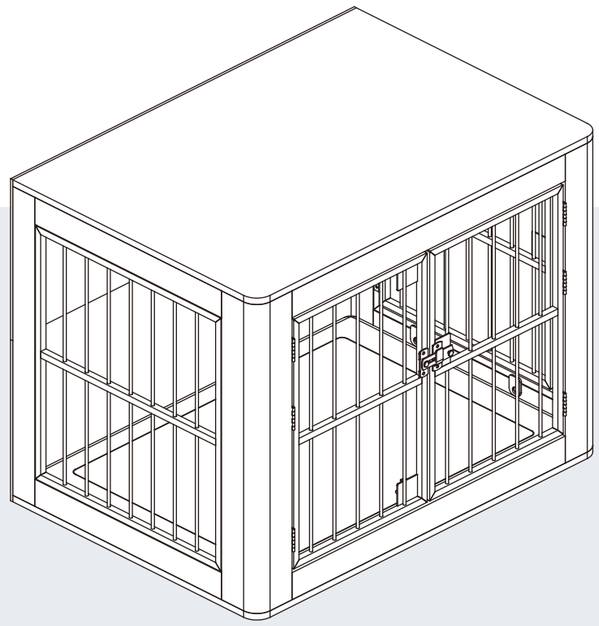

Dog Crate

SKU:
C003017010
C003017020

V1.0

US-EN

CONTACT US

- **Email: service@grandtunnel.com**
  In order to receive assistance more quickly, please provide

THE FOLLOWING INFORMATION:

- Order number
- Purchase platform
- Purchase date
- Detailed description of the issue along with photos (if applicable)

Important – Please read these instructions carefully before starting the installation.

Before Assembly

Thank you for choosing our product!
To ensure a smooth installation process, please read this guide carefully to familiarize yourself with the required tools, materials, and installation steps.
Follow the relevant sections to avoid any damage caused by improper installation, and make sure to review all operation and safety guidelines for correct installation procedures.

Packaging Notice:

If you find any missing boxes, damaged parts, or accessory shortages, please contact the customer service team of your purchasing channel immediately. We will resolve the issue as quickly as possible.

Safety and Care Advice

Important :
Please read these instructions fully before starting assembly.

- Check you have all the components and tools listed on the following pages.
- Remove all fittings from the plastic bags and separate them into their groups.
- Keep children and animals away from the work area, small parts could choke if swallowed.
- Make sure you have enough space to layout the parts before starting.
- During assembly do not stand or put weight on the product, this could cause damage.
- Assemble the item as close to its final position (in the same room) as possible.
- Assemble on a soft level surface to avoid damaging the unit or your floor.
- Parts of the assembly will be easier with 2 people.



- To reduce the likelihood of damaging your product please ensure that your power drill is set on a low torque setting.

Email : **service@grandtunnel.com**

Care and Maintenance

- Only clean using a damp cloth and mild detergent, do not use bleach or abrasive cleaners.
- From time to time check that there are no loose screws on this unit.
- This product should not be discarded with household waste. Take to your local authority waste disposal center.

Handy Hints

- Assemble all parts and bolts loosely during assembly, only once the product is complete should you fully tighten the bolts.
- Regularly check and ensure that all bolts and fittings are tightened properly.

Warning

In order to help prevent overturning, please follow these instructions.

- Use the anti tip strap or wall fixing method provided (if applicable).
- Do not allow children to climb or hang on the furniture.
- Do not open more than one drawer at a time.
- Do not place heavy items in the top drawers.
- Do not place heavy items on top of the furniture, unless the furniture has been designed for this purpose.
- Please note that only the anti tip strap is provided. You will need to provide wall plugs and screws applicable for your wall type.

Email : **service@grandtunnel.com**

Customer Service Guide

Thank you for choosing our product! We are committed to providing you with excellent service. If you find any missing parts, damaged packaging, or product damage after receiving all packages, please follow the steps below to quickly contact our customer service team. We will do our best to resolve your issue.

1. Missing Parts

Verify Parts:

1. Refer to the “Parts List” in the manual to verify the name, specifications, and quantity of the missing parts.
2. Take a clear photo of the parts list and mark the missing parts with detailed information, e.g., “Missing 5 pieces of M6×30mm screws.”

Contact Us:

By Email:

Send an email to **service@grandtunnel.com**, with the subject line “Missing Parts Issue.” Include the following in the email:

- A description of the missing parts and a photo of the parts list.
- Order details (order number, purchase platform, purchase date).

2. Product or Packaging Damage

If it affects normal use:

Steps:

1. Take clear photos or videos showing the damaged parts and the extent of the damage (multi-angle shots are recommended).
2. Email the photos/videos along with order details to **service@grandtunnel.com**, with the subject line “Product Damage Issue.”

Resolution:

After verification, we will arrange for a replacement part, product exchange, or refund as quickly as possible.

If it does not affect normal use:

Steps:

1. Contact our customer service team (by email: **service@grandtunnel.com**).
2. Provide a description of the damage and include relevant photos or videos.

Resolution:

We will provide repair guidance or an appropriate compensation plan based on the specific situation.

Contact Us:

Customer Service Email: **service@grandtunnel.com**

Helpful Tips

To process your issue efficiently, please prepare the following information:

- Order details (order number, purchase platform, purchase date).
- Clear photos or videos.
- We are committed to providing quick and professional solutions, no matter the size of the issue, to ensure your satisfaction.

Thank you for your trust and support!
We hope you enjoy using our product!

Email : **service@grandtunnel.com**

EN

Parts List - Panels

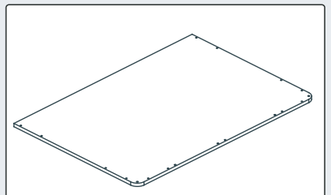

1 780X554X12mm x1

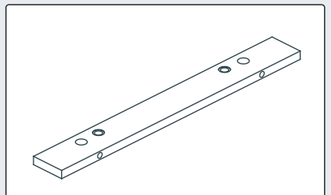

2 424X50X12mm x2

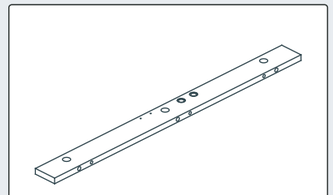

3 620X50X12mm x1

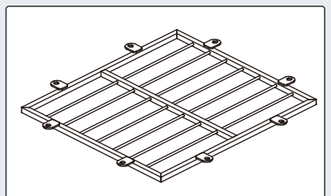

4 523X475X15mm x1

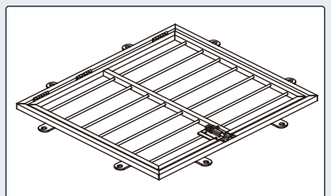

5 523X475X21mm x1

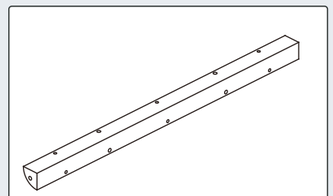

7 572X30X30mm x2

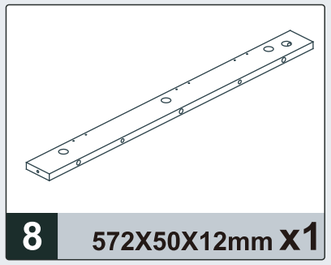

8 572X50X12mm x1

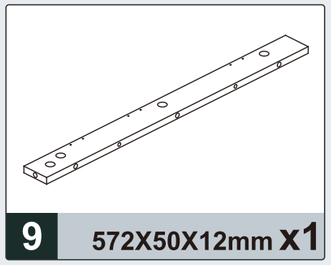

9 572X50X12mm x1

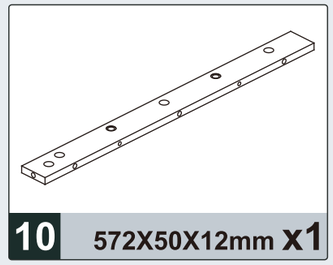

10 572X50X12mm x1

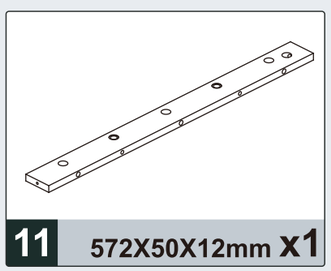

11 572X50X12mm x1

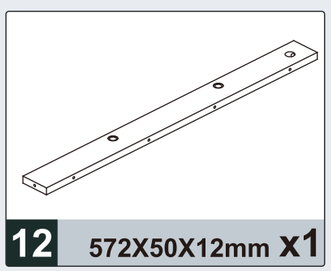

12 572X50X12mm x1

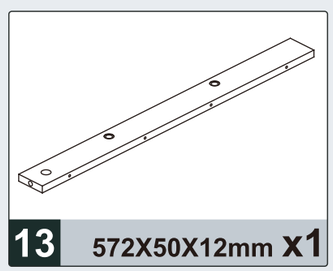

13 572X50X12mm x1

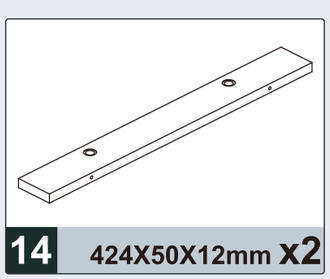

14 424X50X12mm x2

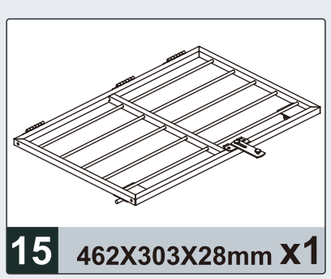

15 462X303X28mm x1

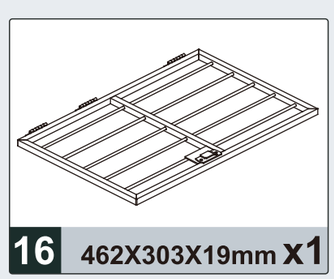

16 462X303X19mm x1

Email : **service@grandtunnel.com**

Parts List - Panels

EN

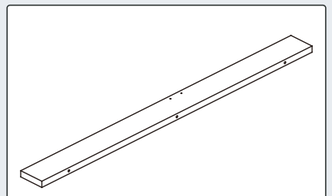

17 620X50X12mm x1

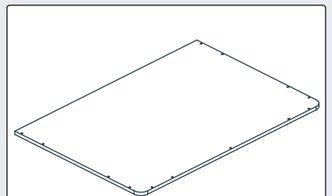

18 780X554X12mm x1

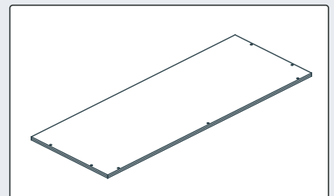

19 780X298X10mm x1

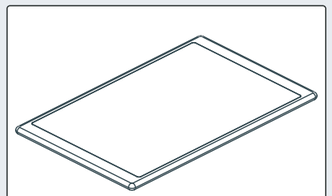

20 755X540X30mm x1

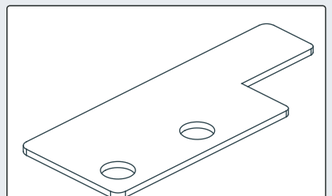

21 100X40X2mm x1

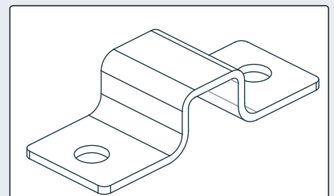

22 35X13X8mm x2

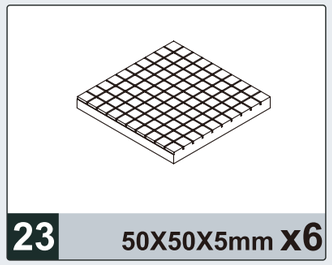

23 50X50X5mm x6

Email : **service@grandtunnel.com**

EN

Parts List - Fittings

Please check you have all the fittings listed below.

Note: The quantities below are the correct amount to complete the assembly. In some cases more fittings may be supplied are required.

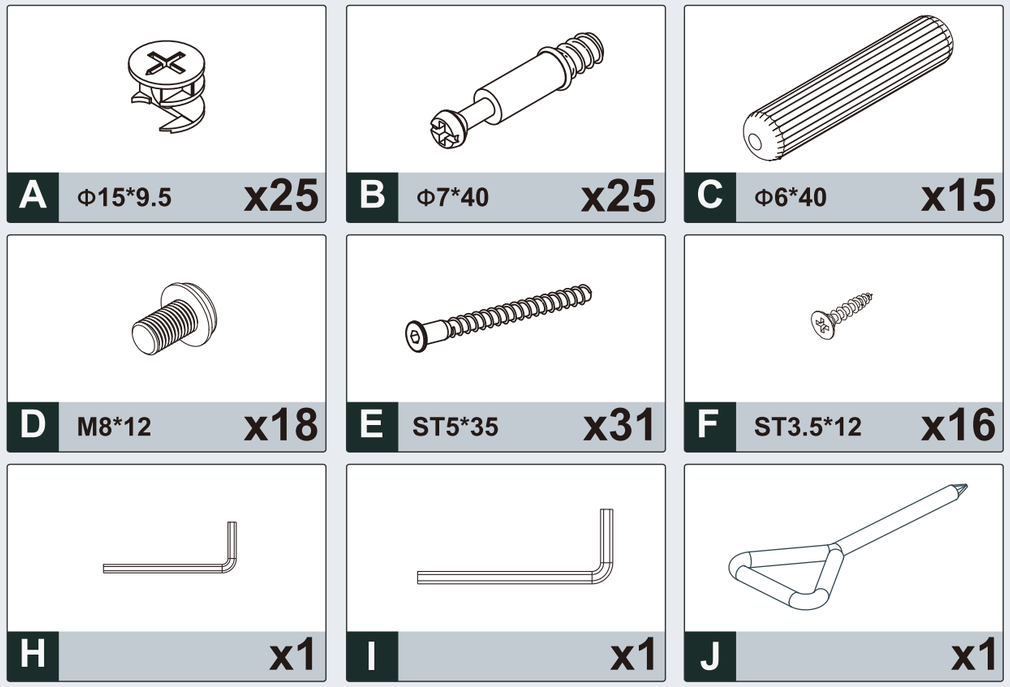

Cam Lock Fastening System

Insert the cam bolt into the hole first, then insert the cam lock and lock it.

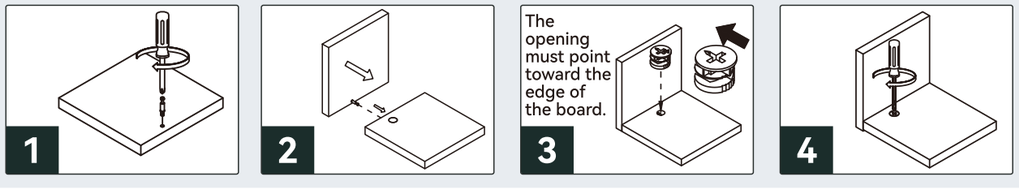

Email : **service@grandtunnel.com**

Assembly Instructions

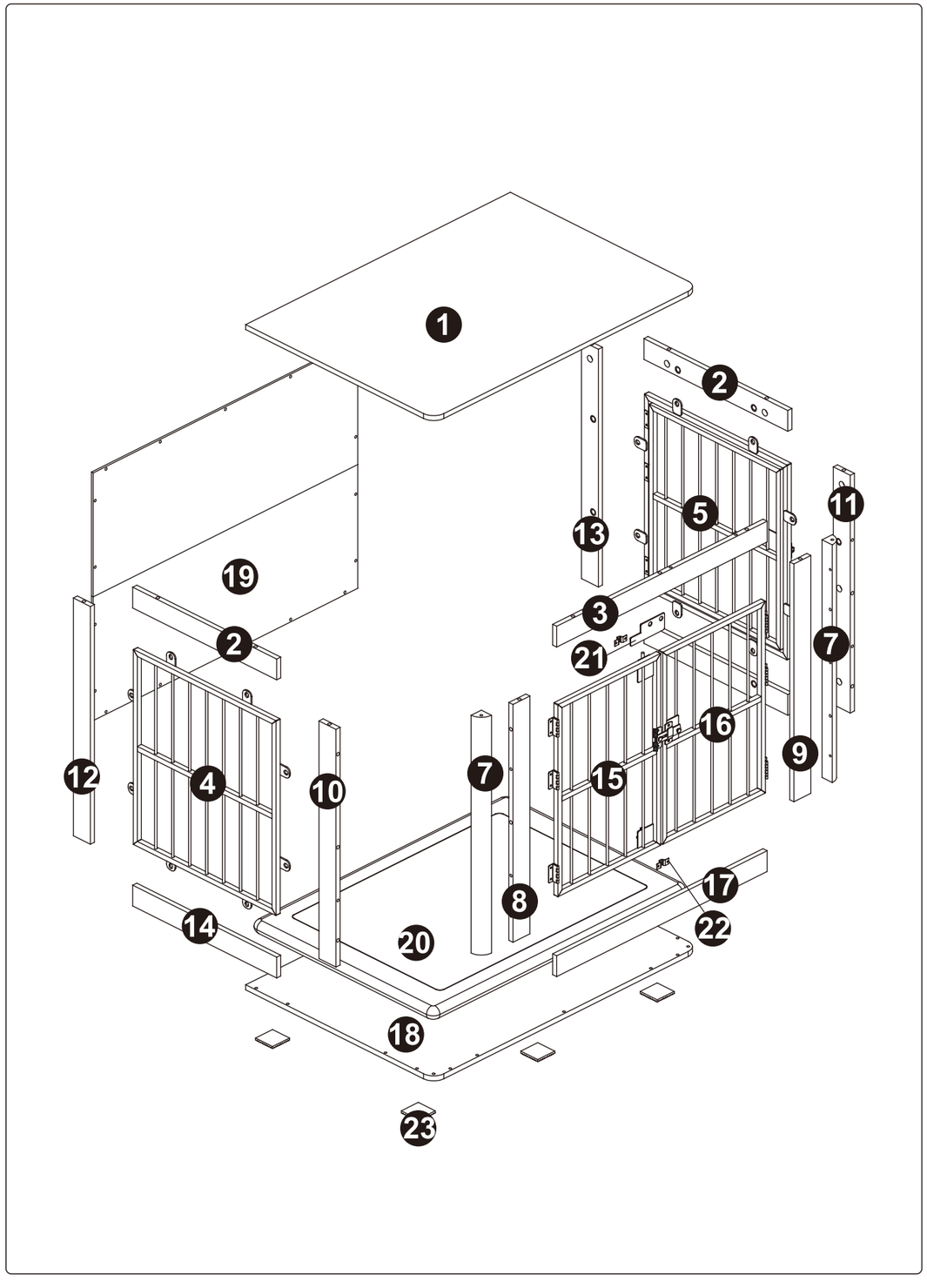

EN

Email : **service@grandtunnel.com**

EN

Step 1

CAM-LOCK
Tighten until shoulder is flush with panel.
Do not overtighten or undertighten
(see example below)

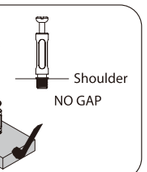

Ⓑ	X12
Ø 7x40	

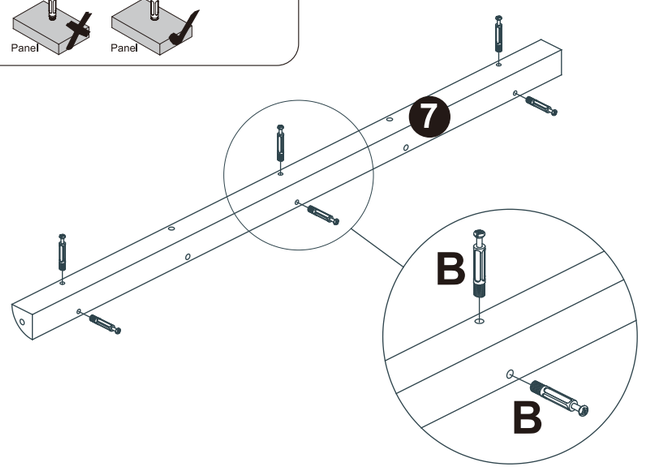

As shown, install Part (B) onto Part (7). **x2**

Step 2

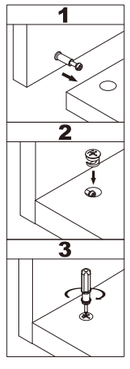

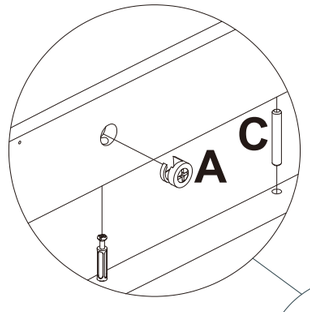

Ⓐ	X6
Ø 15x9.5	

Ⓒ	X4
Ø 6x40	

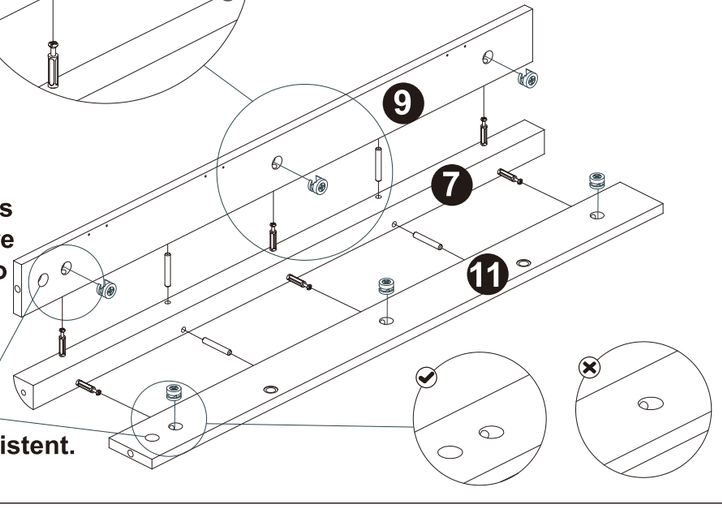

As shown, use Parts (A) and (C) to secure Parts (9) and (11) to Part (7).

⚠ Keep the hole orientation consistent.

Email : service@grandtunnel.com

Step 3

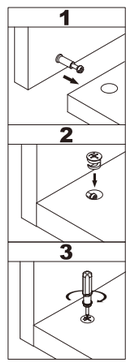

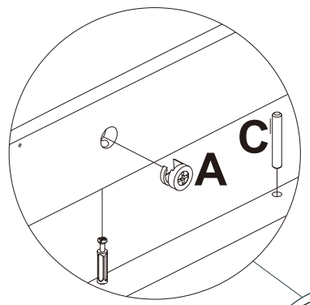

Ⓐ	X6
Ø 15x9.5	

Ⓒ	X4
Ø 6x40	

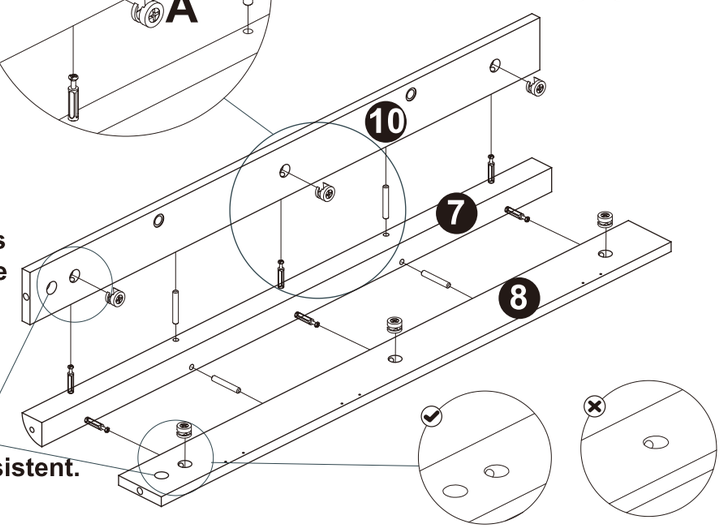

As shown, use Parts (A) and (C) to secure Parts (8) and (10) to Part (7).

⚠ Keep the hole orientation consistent.

Step 4

Ⓕ	X6
ST3.5X12	

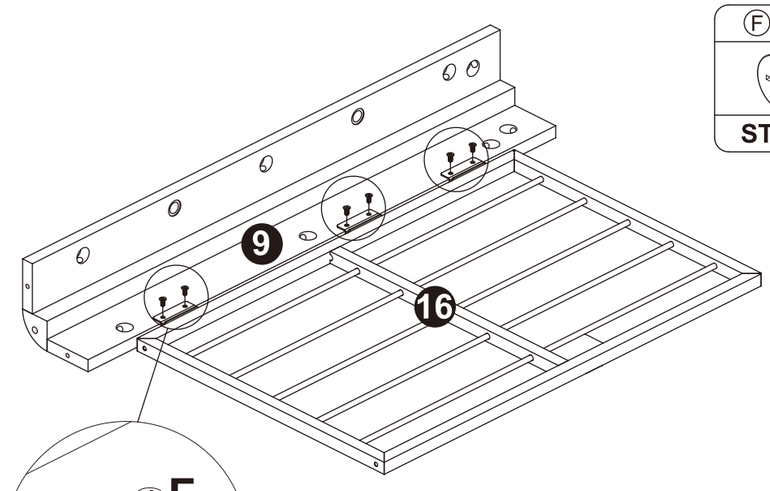

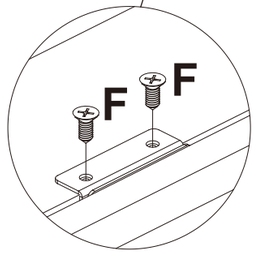

As shown, use Part (F) to secure Part (16) to Part (9).

Email : service@grandtunnel.com

EN

EN

Step 5

Ⓕ X6



ST3.5X12

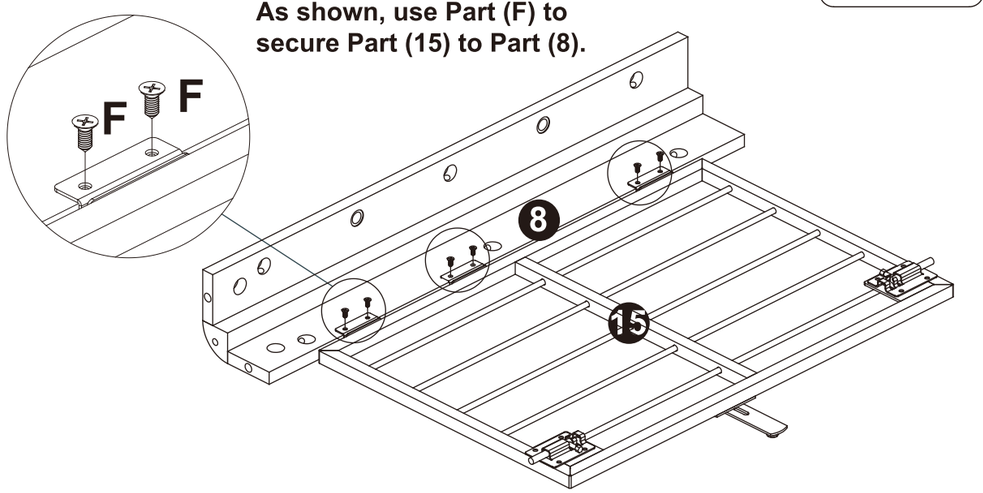

Step 6

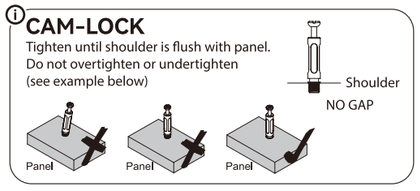

Ⓑ X13



Ø 7x40

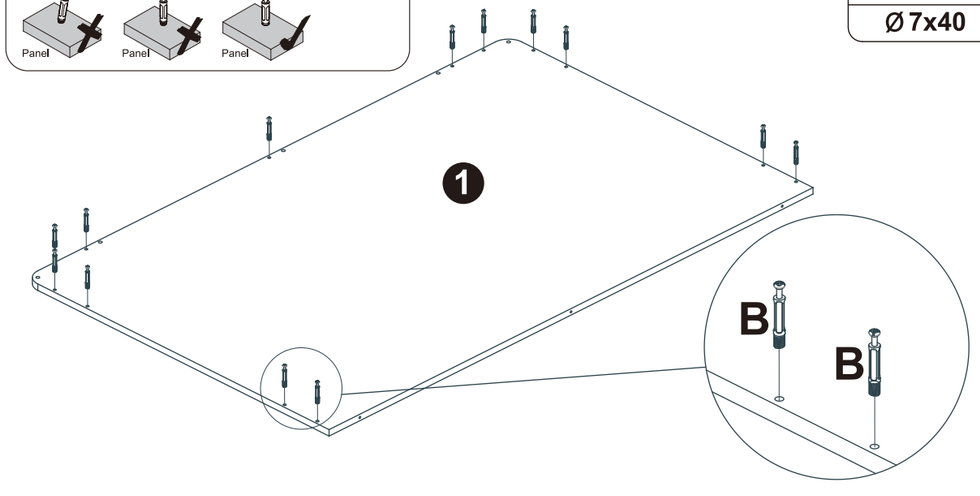

As shown, install Part (B) onto Part (1).

EN

Step 7

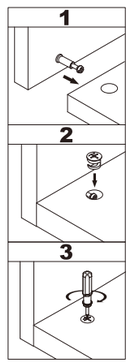

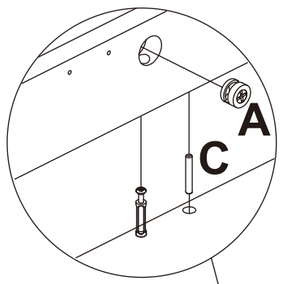

Ⓐ X3



Ø 15x9.5

Ⓒ X3



Ø 6x40

As shown, use Parts (A) and (C) to secure Part (3) to Part (1).

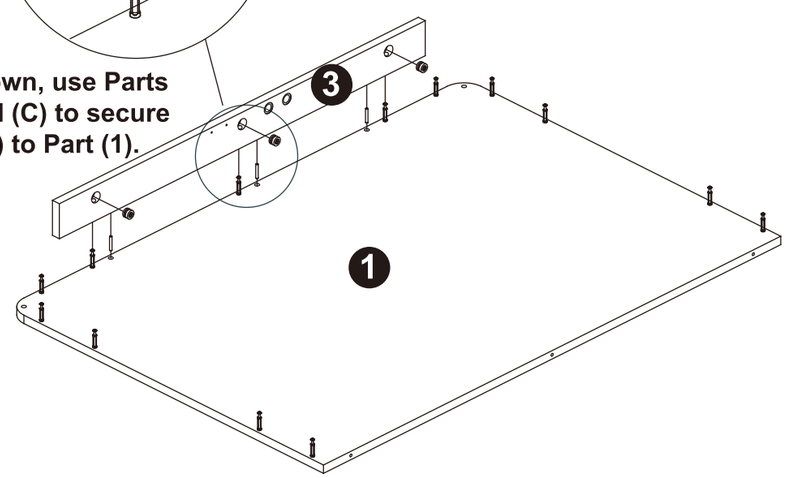

Step 8



2 PERSON ASSEMBLE

Ⓐ X4



Ø 15x9.5

Ⓒ X2



Ø 6x40

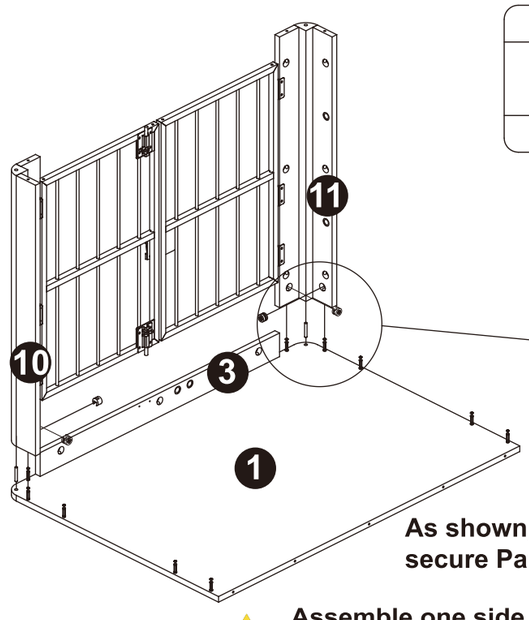

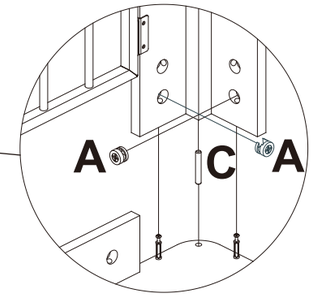

As shown, use Parts (A) and (C) to secure Parts (10) and (11) to Part (1).

Assemble one side at a time. Take care to avoid pinching your hands.

EN

Step 9

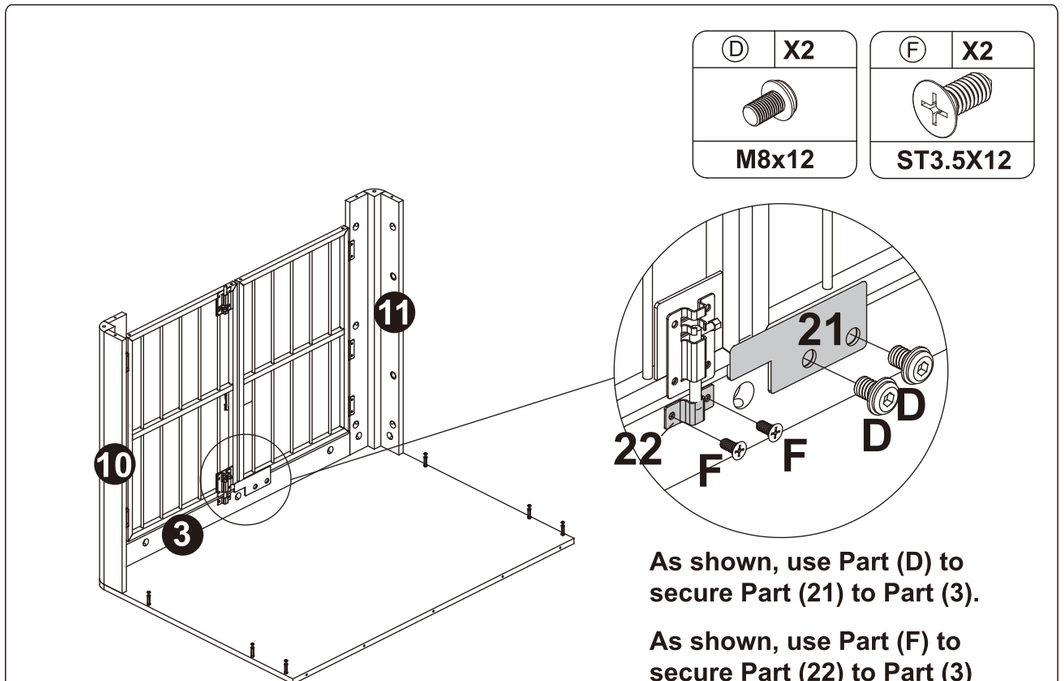

As shown, use Part (D) to secure Part (21) to Part (3).

As shown, use Part (F) to secure Part (22) to Part (3)

Step 10

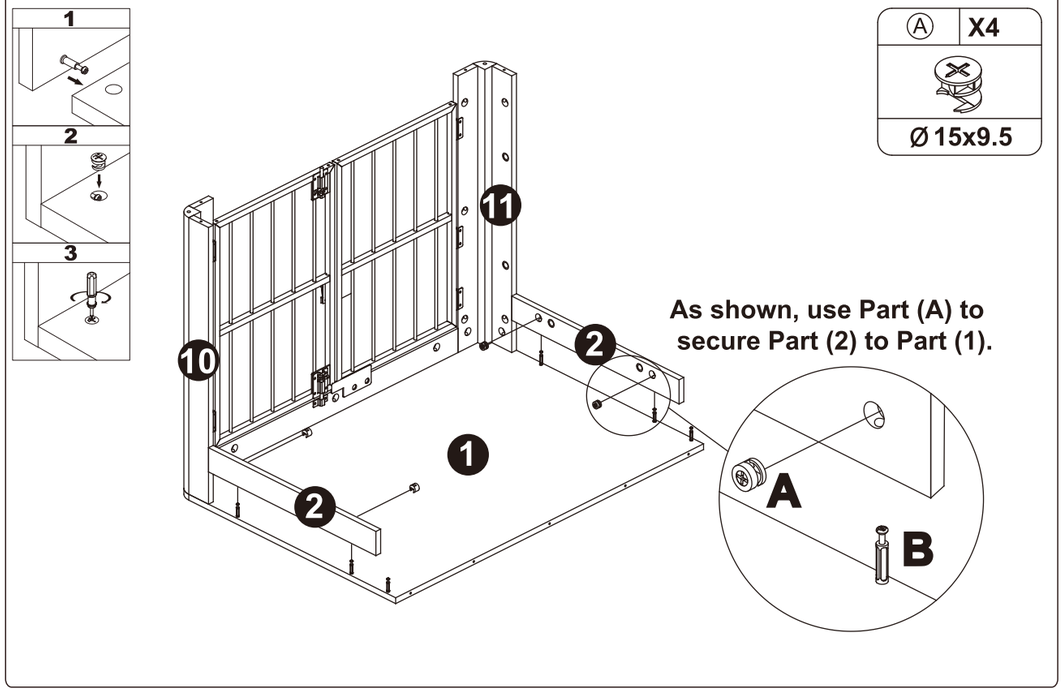

As shown, use Part (A) to secure Part (2) to Part (1).

Email : service@grandtunnel.com

EN

Step 11

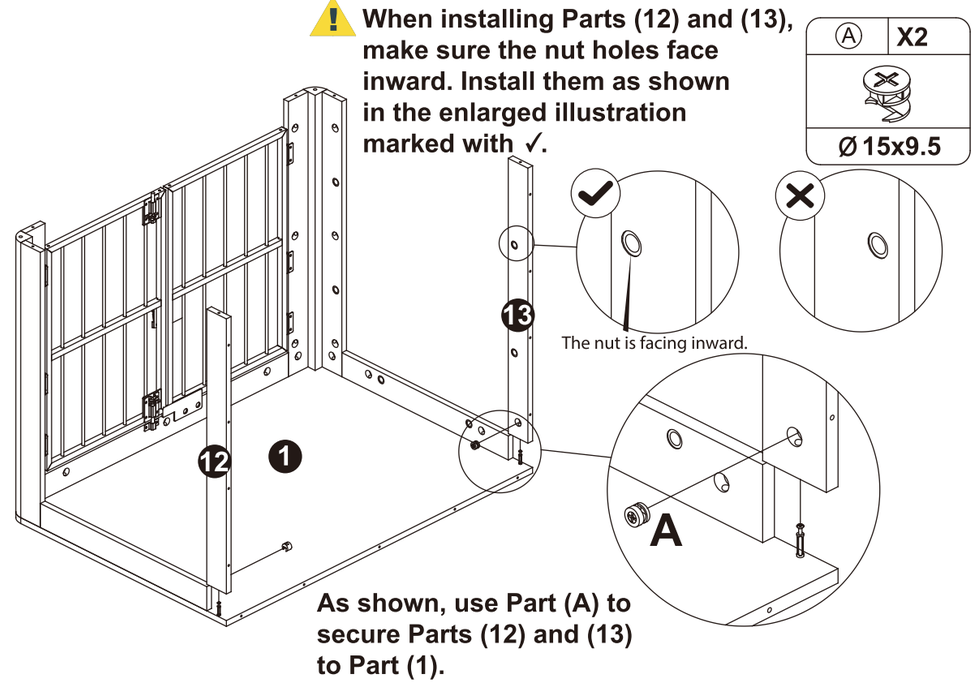

As shown, use Part (A) to secure Parts (12) and (13) to Part (1).

Step 12

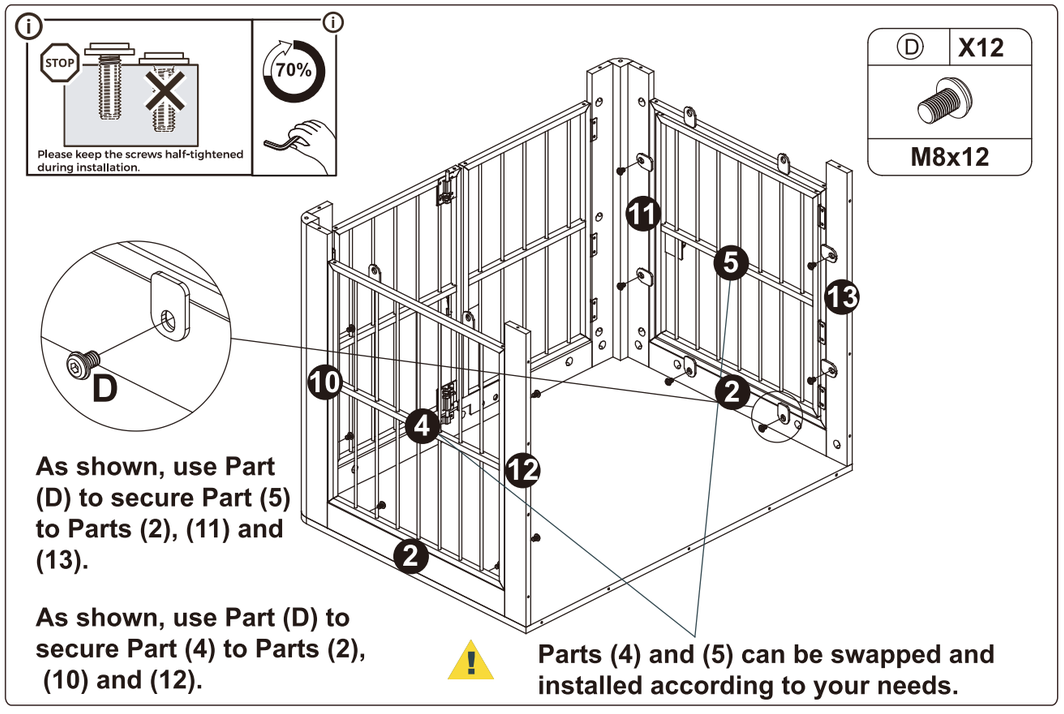

As shown, use Part (D) to secure Part (5) to Parts (2), (11) and (13).

As shown, use Part (D) to secure Part (4) to Parts (2), (10) and (12).

Parts (4) and (5) can be swapped and installed according to your needs.

Email : service@grandtunnel.com

EN

Step 13

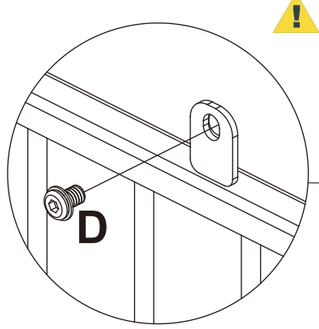

As shown, use Part (D) to secure Part (14) to Parts (4) and (5).

Note: Ensure flush alignment during assembly here.

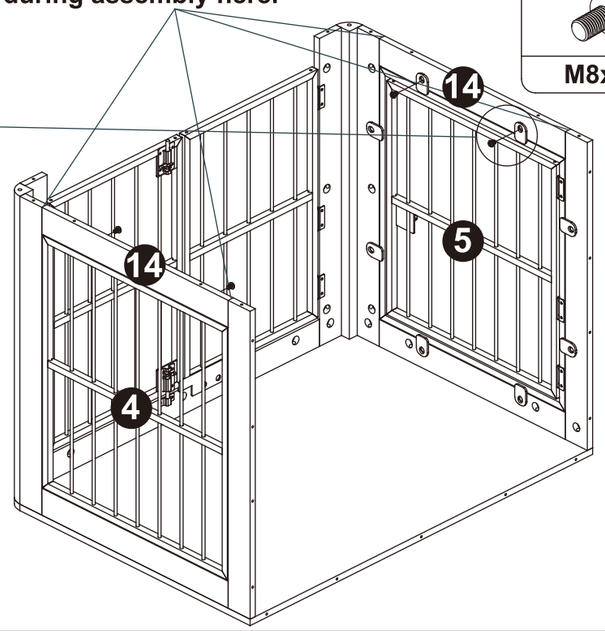

Ⓓ	X4
M8x12	

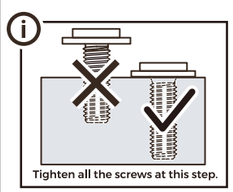



Step 14

Ⓕ	X2
ST3.5X12	

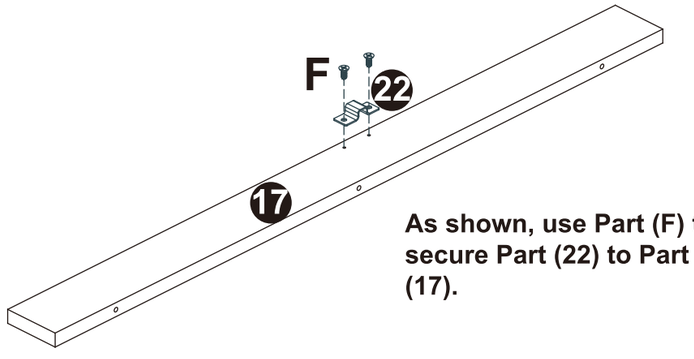

As shown, use Part (F) to secure Part (22) to Part (17).

Step 15

As shown, use Part (E) to secure Part (17) to Part (18).

Ⓔ	X3
ST5x35	

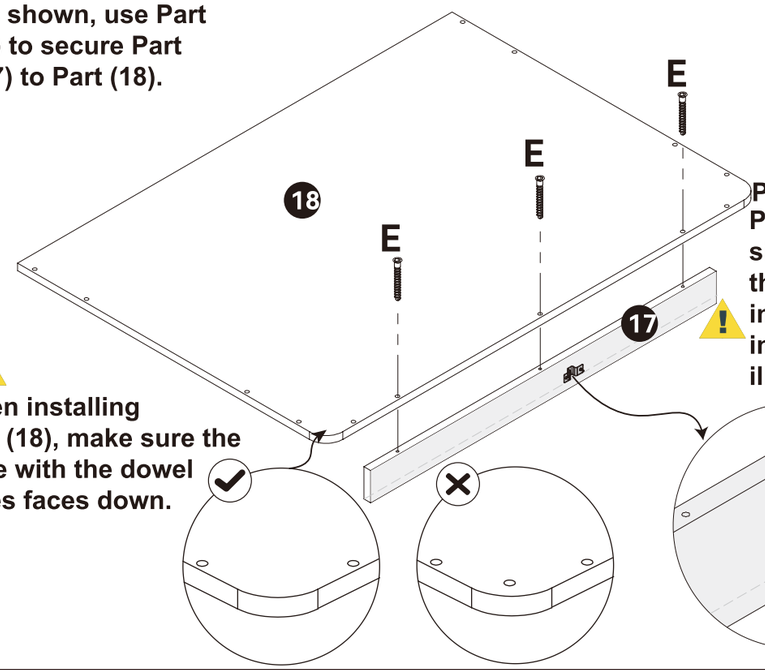

Position Part (17) with the side containing the fittings facing inward, as shown in the enlarged illustration.

When installing Part (18), make sure the side with the dowel holes faces down.

Step 16

2 PERSON ASSEMBLE

Ⓒ	X2
Ø 6x40	

Ⓔ	X10
ST5x35	

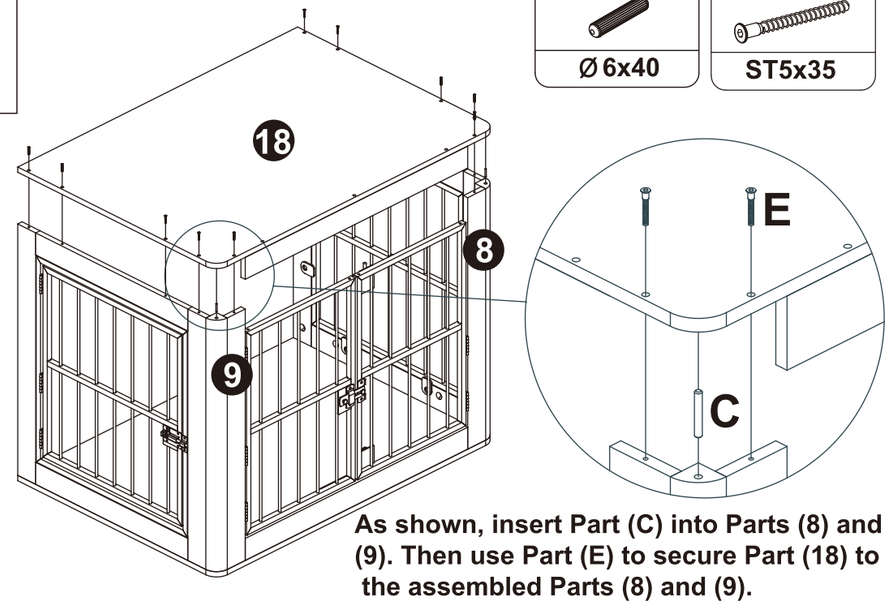

As shown, insert Part (C) into Parts (8) and (9). Then use Part (E) to secure Part (18) to the assembled Parts (8) and (9).

EN

Step 17

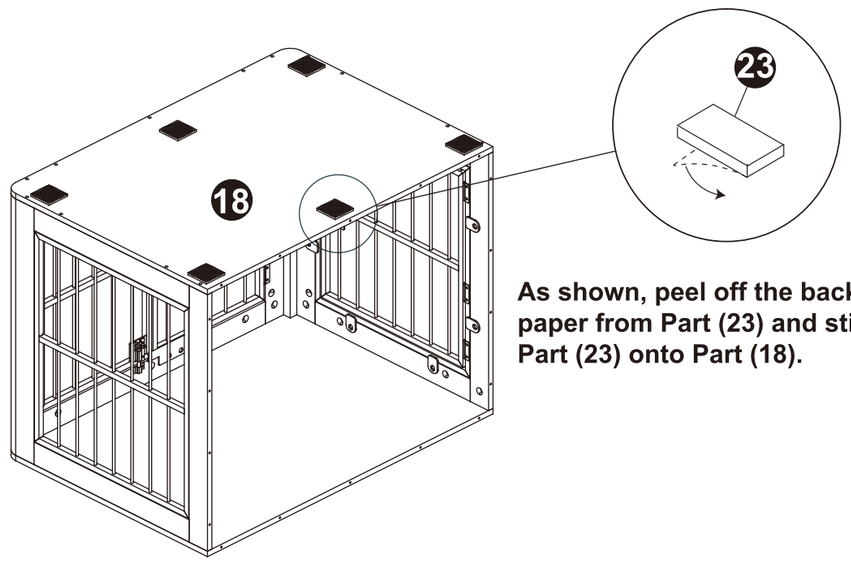

As shown, peel off the backing paper from Part (23) and stick Part (23) onto Part (18).

Step 18

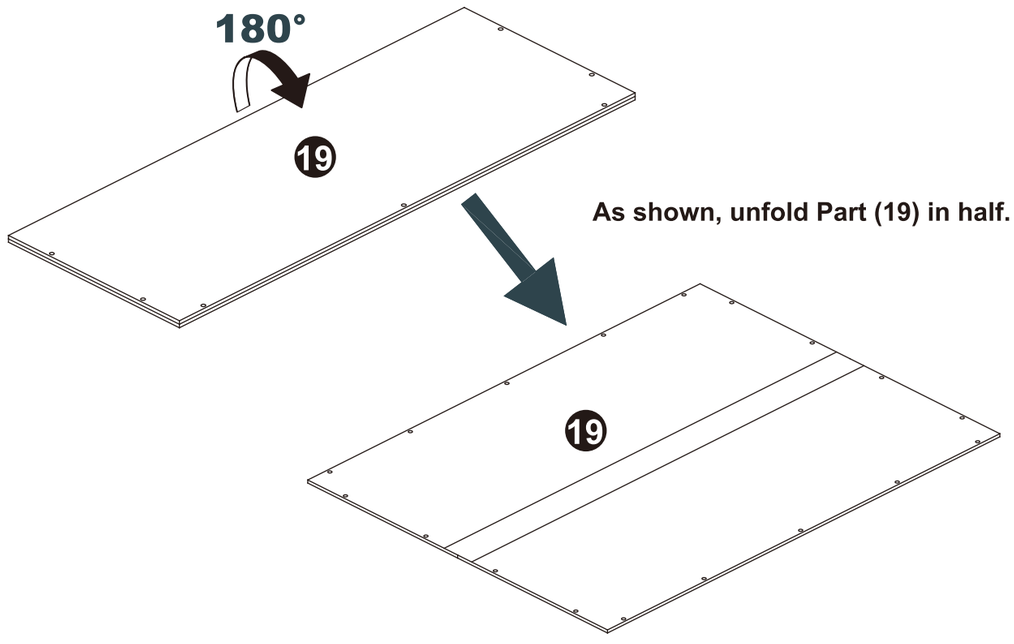

As shown, unfold Part (19) in half.

Email : service@grandtunnel.com

EN

Step 19

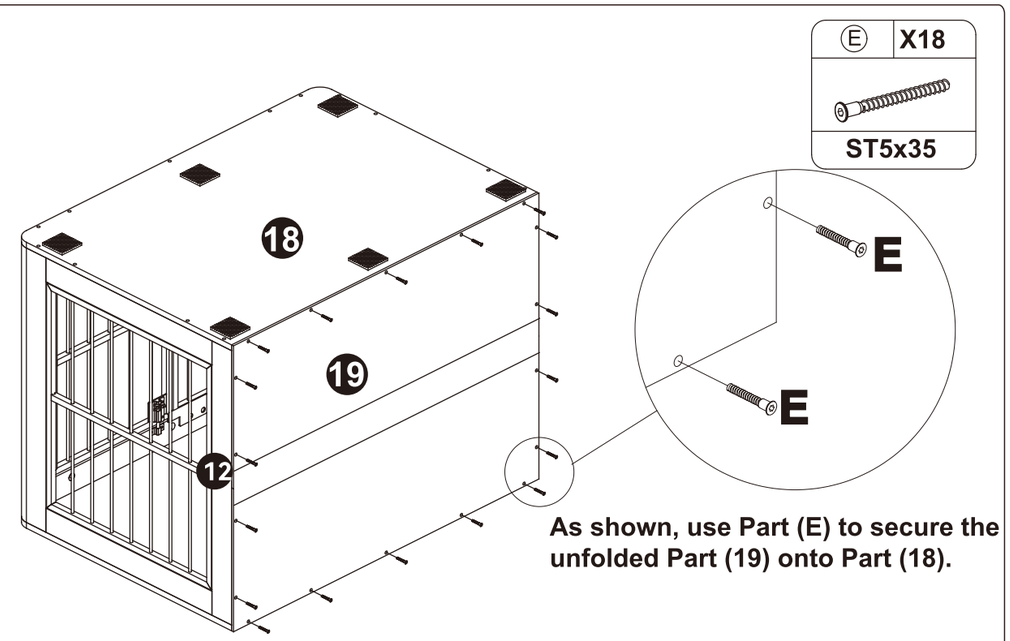

As shown, use Part (E) to secure the unfolded Part (19) onto Part (18).

Step 20

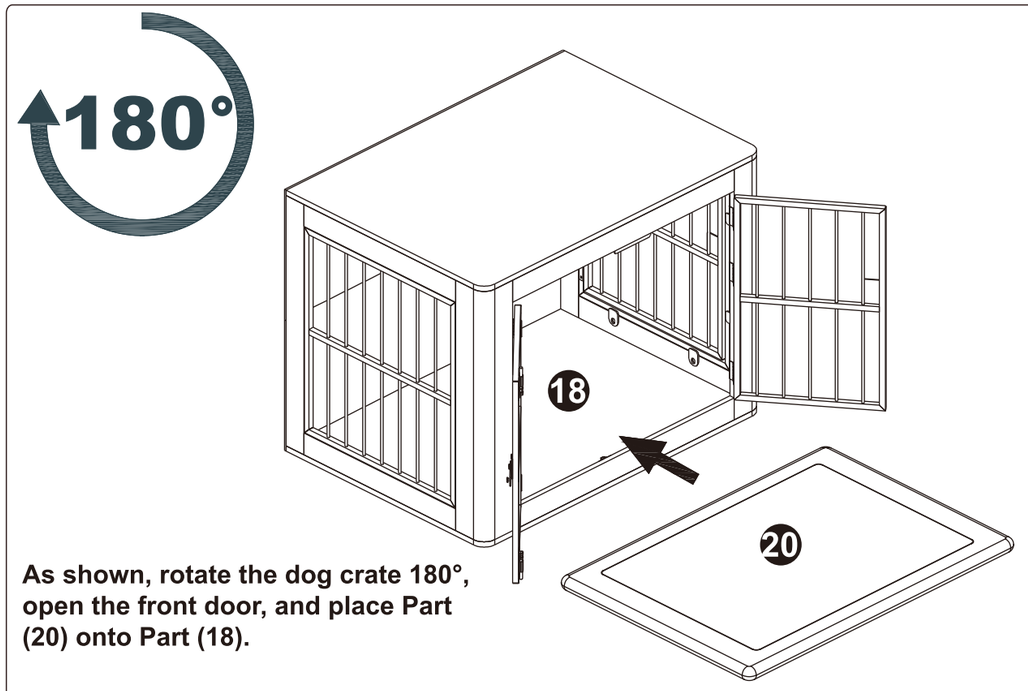

As shown, rotate the dog crate 180°, open the front door, and place Part (20) onto Part (18).

Email : service@grandtunnel.com

Step 21

Step 1

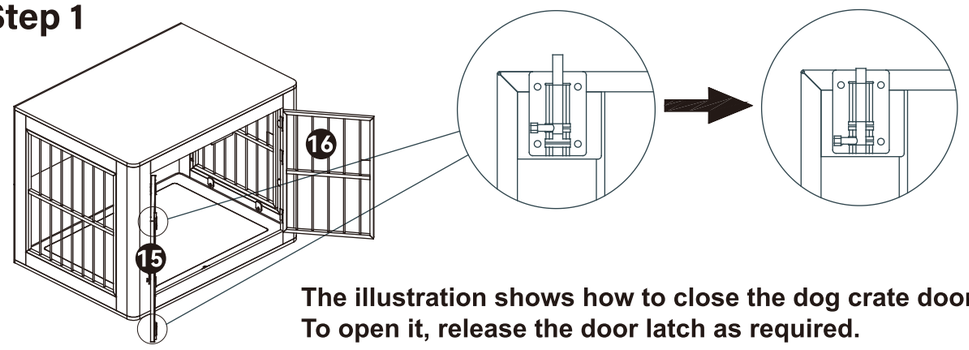

The illustration shows how to close the dog crate door.
To open it, release the door latch as required.

Step 2

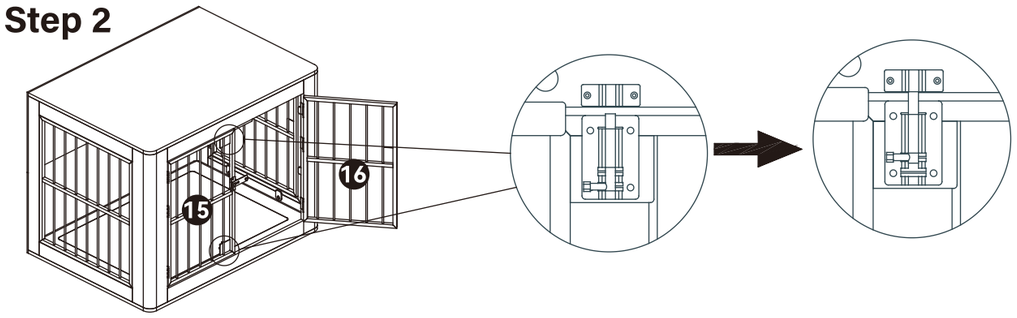

Step 22

Step 1

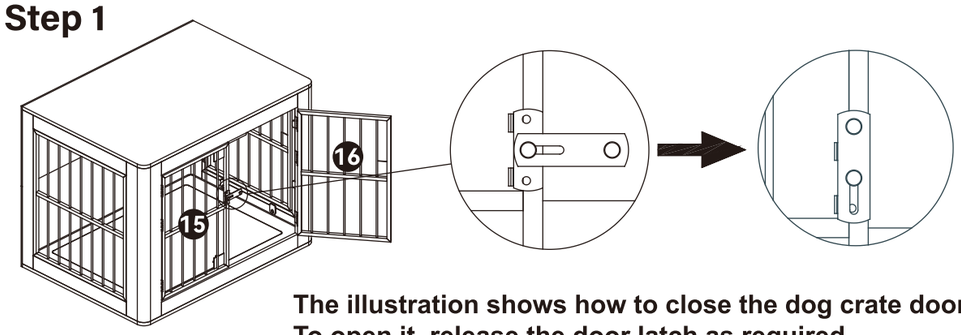

The illustration shows how to close the dog crate door.
To open it, release the door latch as required.

Step 2

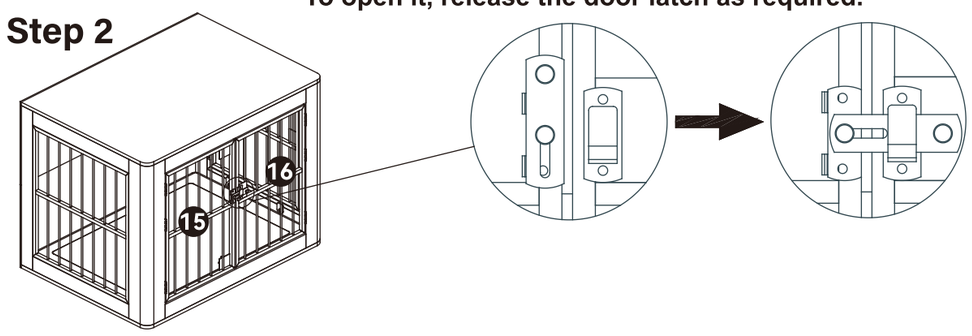

Email : **service@grandtunnel.com**

EN

Step 23

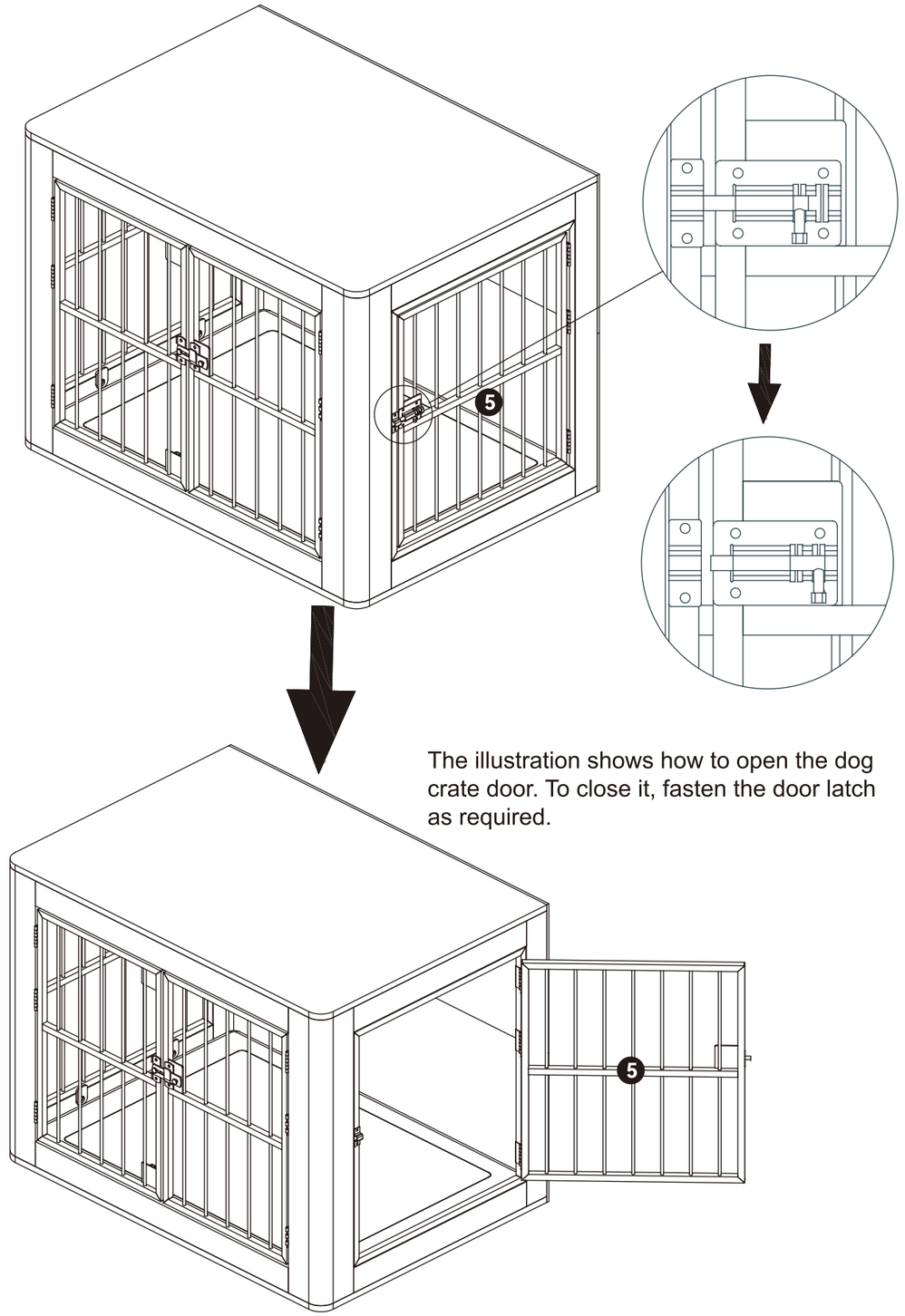

The illustration shows how to open the dog crate door. To close it, fasten the door latch as required.

Email : **service@grandtunnel.com**