Assembly Instructions

Caution : You must read this before you proceed

Care & Maintenance

- ⊘  Not for commercial use. For residential use only.
- ⊘  Do not put hot items directly on furniture surface.
- ⊘  Do not clean furniture with harsh cleansers or polish.
- ✓  To obtain the longest lifespan of your outdoor products, minimizing exposure to direct sunlight is recommended.
- ⊘  Children should not climb or jump on the furniture.
- ⊘  Do not write on furniture without a padded barrier to protect the surface.
- ✓  To obtain the longest lifespan of your outdoor products, avoid extended and lengthy exposure to rain, snow, and direct sunshine. Whenever possible cover the product and /or place under patio or awnings.
- ⊘  Stains may be removed with mild soap solution and damp cloth.

- ✓  Dust and pick-up spills using a clean, non-colored, lint-free cloth.

Please look in carton for hardware packs and legs.
Sets often ship in multiple boxes and may arrive a day or two apart.

ASSEMBLY INSTRUCTION

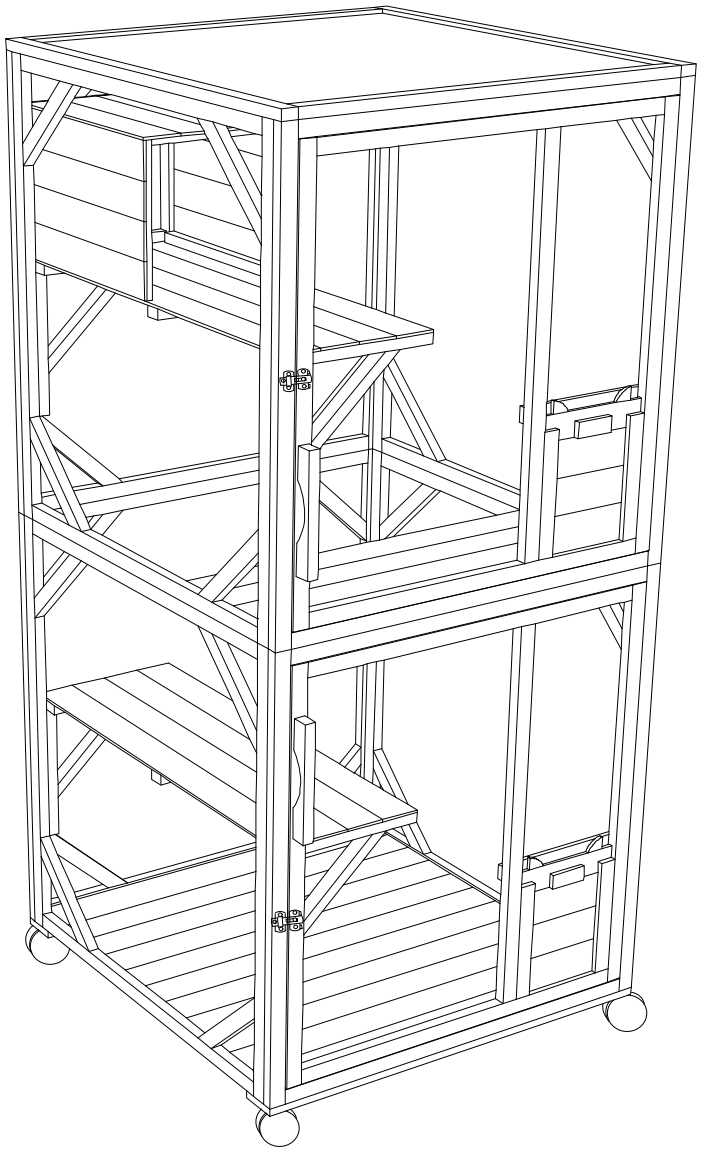

N775P469402

IMPORTANT NOTE:

1.Place all parts on a clean and smooth surface such as a rug or carpet to avoid the parts from being scratched.
2.Before you begin, kindly follow the assembly instruction step by step.
3.Do not tighten all screws and bolts until the bar cart is fully set-up.
4.Please do not return to store, contact the seller if you have any troubles with this product.

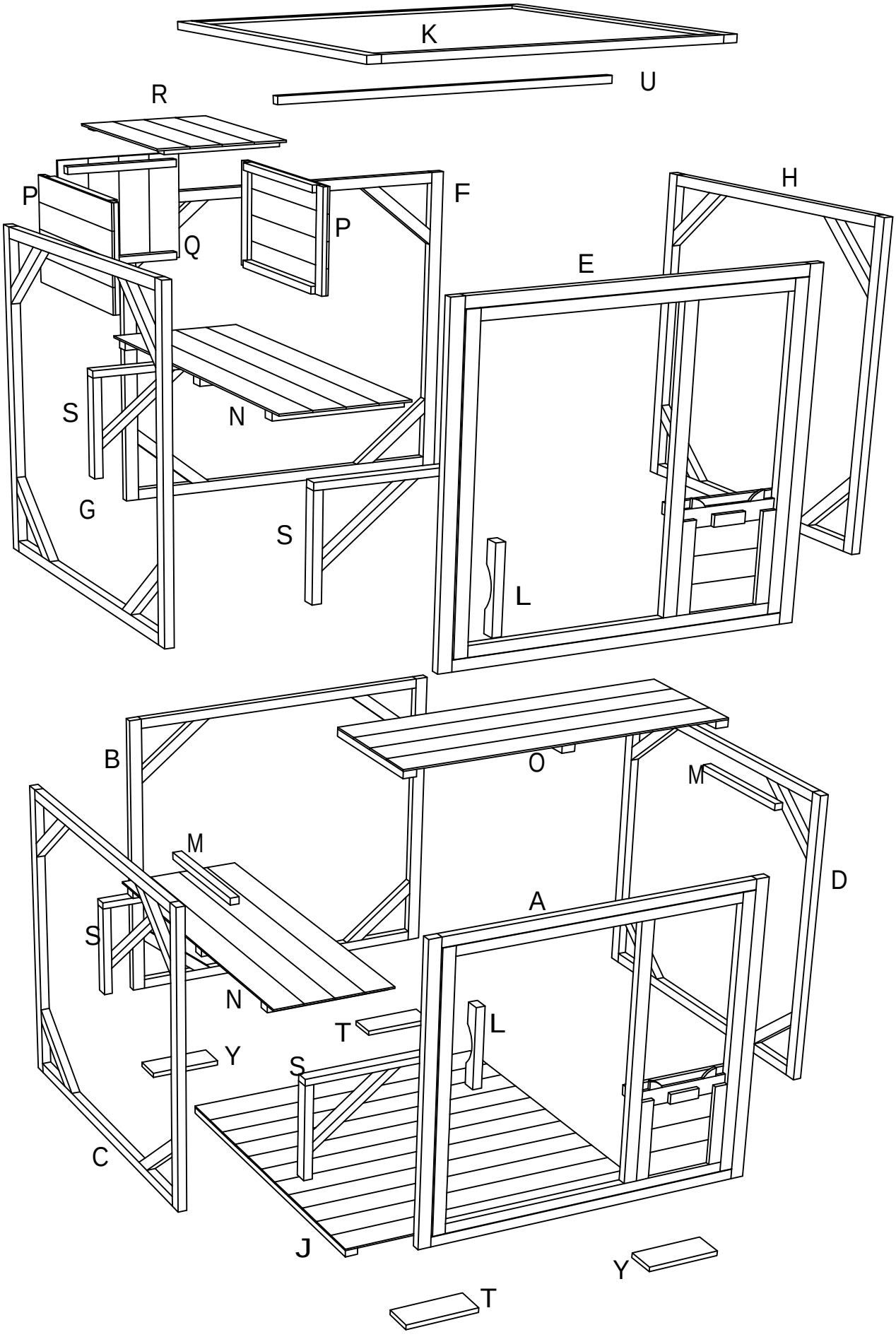
K
U
R
P
Q
P
F
H
E
S
N
G
S
L
B
O
M
M
D
A
S
N
T
L
Y
S
C
J
Y
T

Part List

A 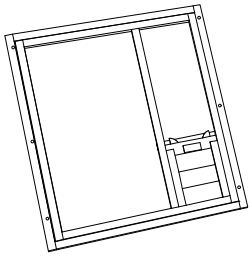 x1	B 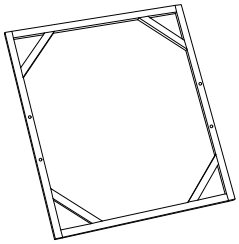 x1	C 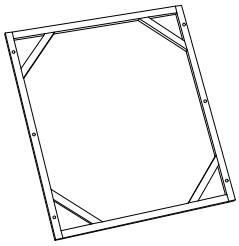 x1	D 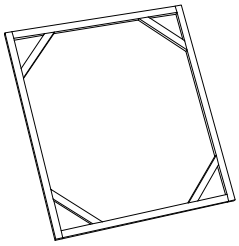 x1
E 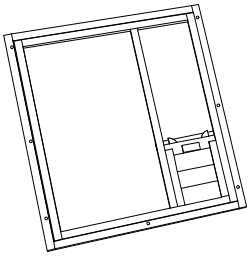 x1	F 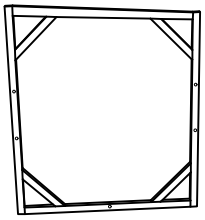 x1	G 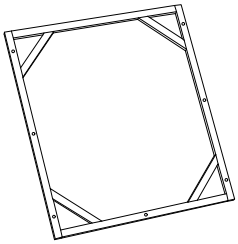 x1	H 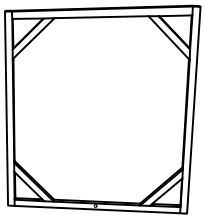 x1
J 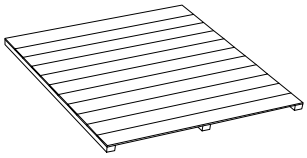 x1	K 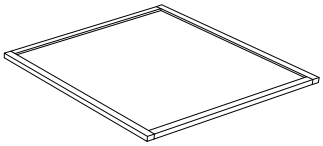 x1	L  x2	M  x2
N 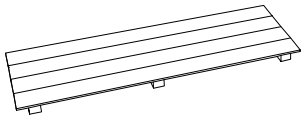 x2	O 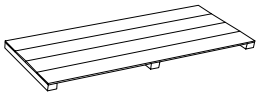 x1	P 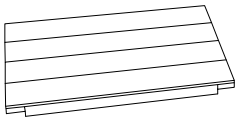 x2	Q 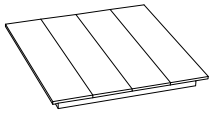 x1
R 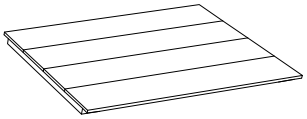 x1	S 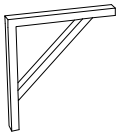 x4	T  x2 Y 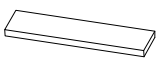 x2	U 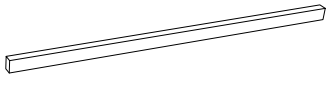 x1

Hardware List

1 x (42) 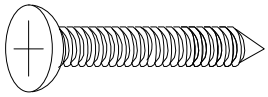 M4*40mm	2 x (16) 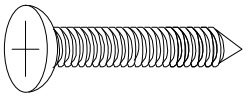 M4*30mm	3 x (4) 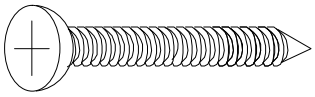 M4*45mm
4 x (16) 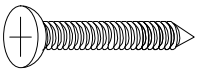 M3*20mm	5 x (8) 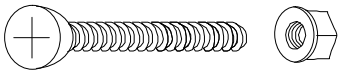 M6*50mm	6 x (8) 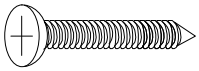 M3*16mm
7 x (2) 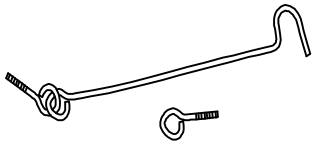	8 x (2) 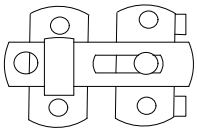	9 x 16 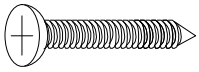 M4*20mm
10 x (4) 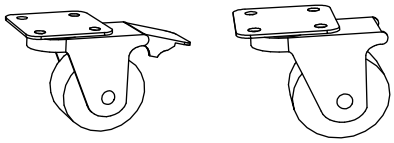		

STEP 1

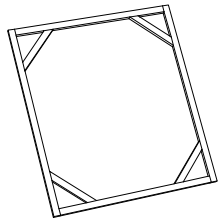

B/C/D



M*2

①:M4*40=6pcs
②:M4*30=4pcs

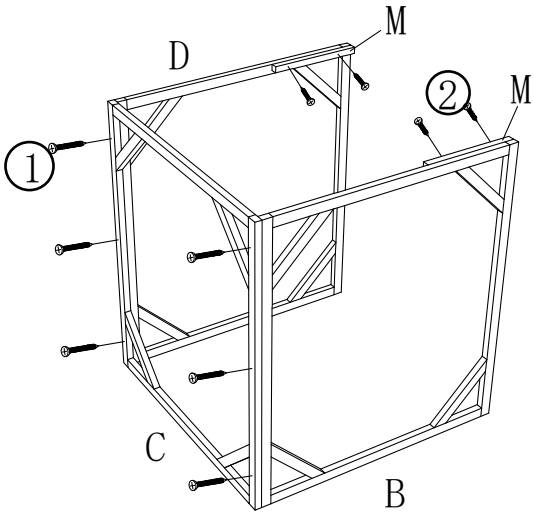

STEP 2

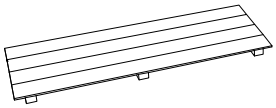

N*1

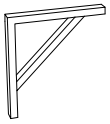

S*2

②:M4*30=4pcs
⑤:M6*50=4pcs

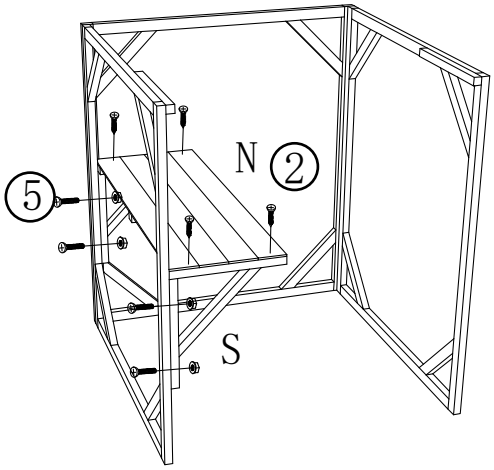

STEP 3-1

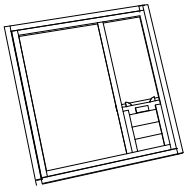

A*1



L*1



T*2



Y*2

①:M4*40=20pcs

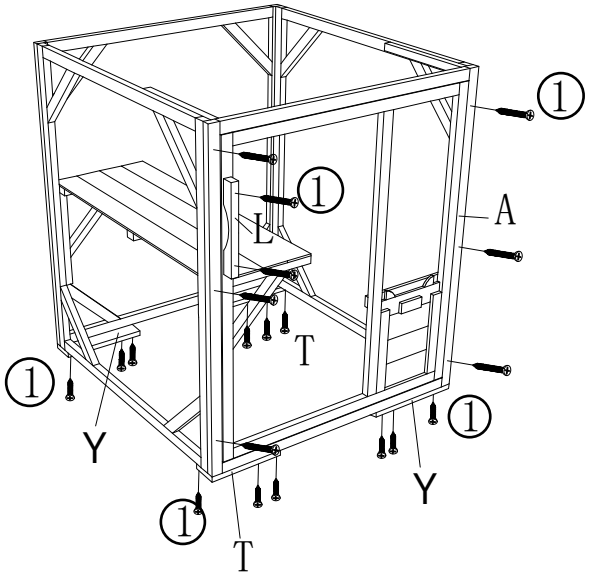

STEP 3-2

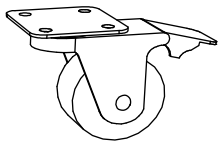

x2

10

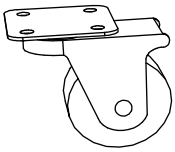

x2

10-1

⑨:M4*20=16pcs

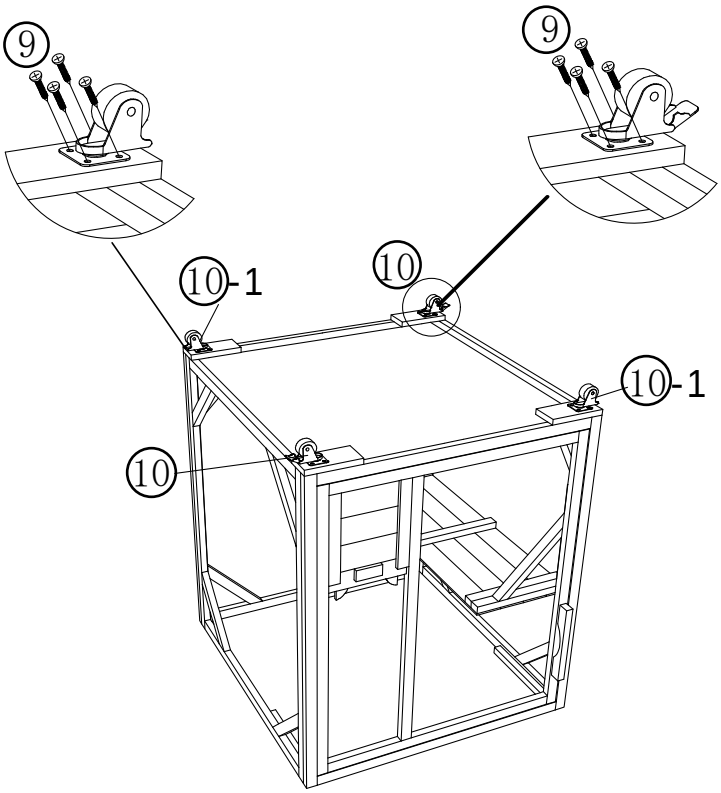

STEP 3-3

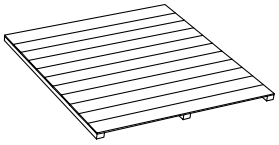

J*1

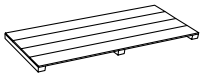

0*1

②:M4*30=4pcs

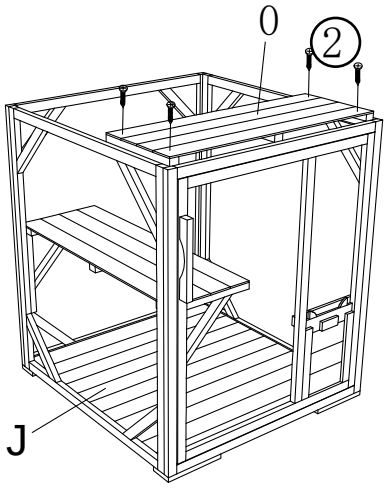

STEP 4

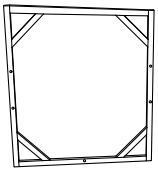

F*1

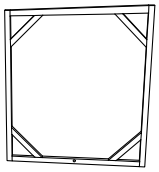

H*1

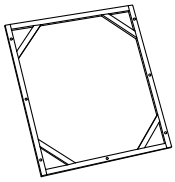

G*1

①:M4*40=6pcs

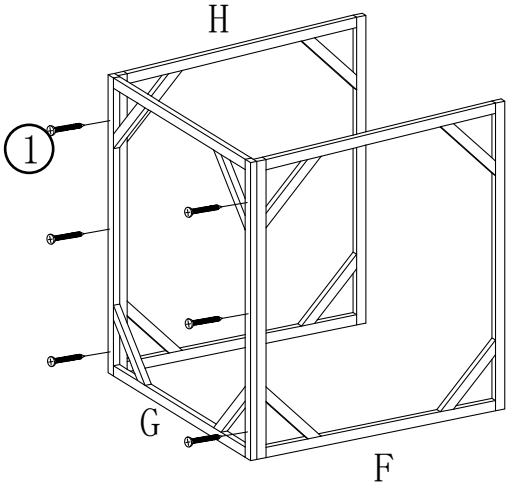

STEP 5

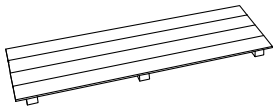

N*1

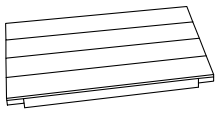

P*2

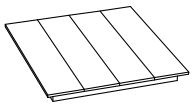

Q*1

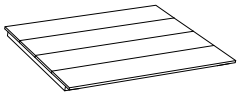

R*1

S*2

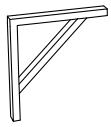

④:M3*20=16pcs

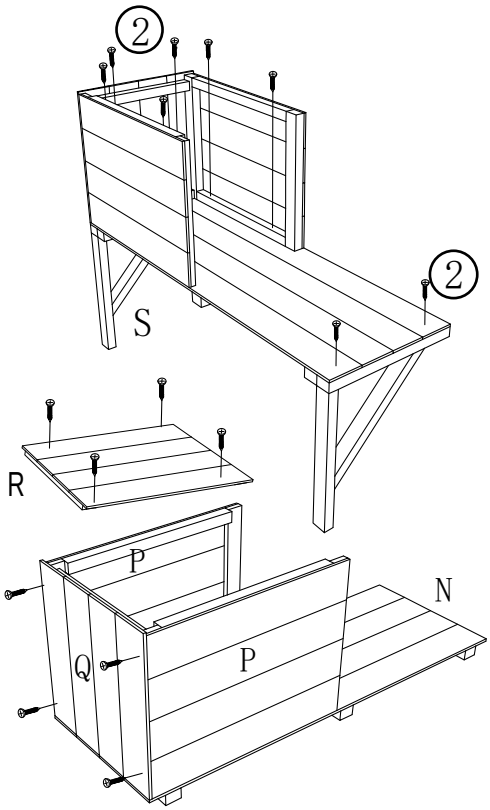

STEP 6

⑤:M6*50=4pcs

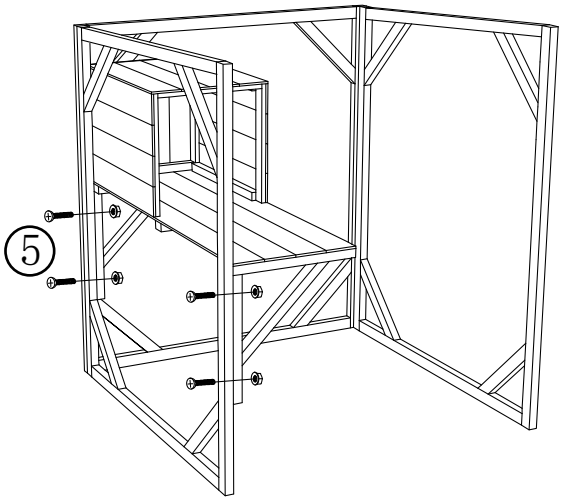

STEP 7

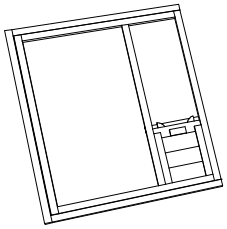

E*1



U*1



L*1

①:M4*40=10pcs

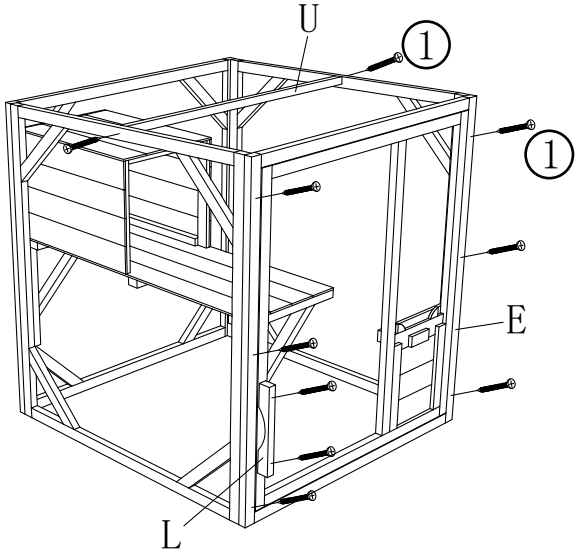

STEP 8

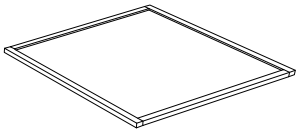

K*1

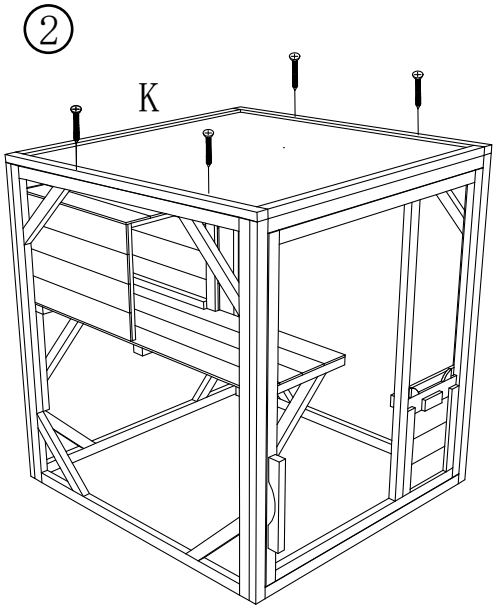

②:M4*30=4pcs

STEP 9

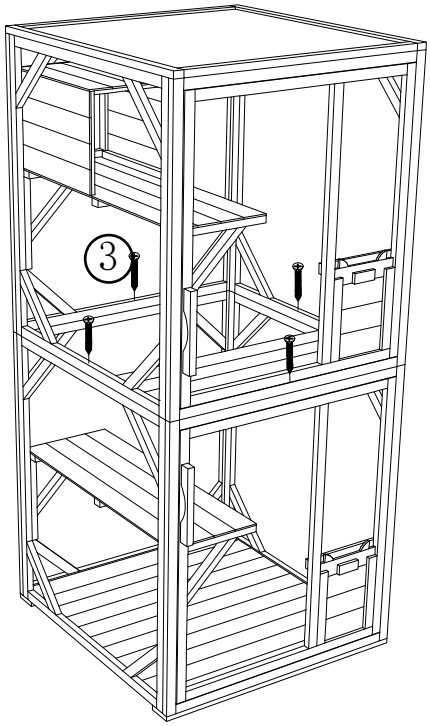

③:M4*45=4pcs

STEP 10

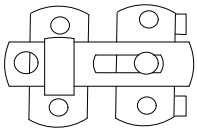

⑧ x (2)

⑩

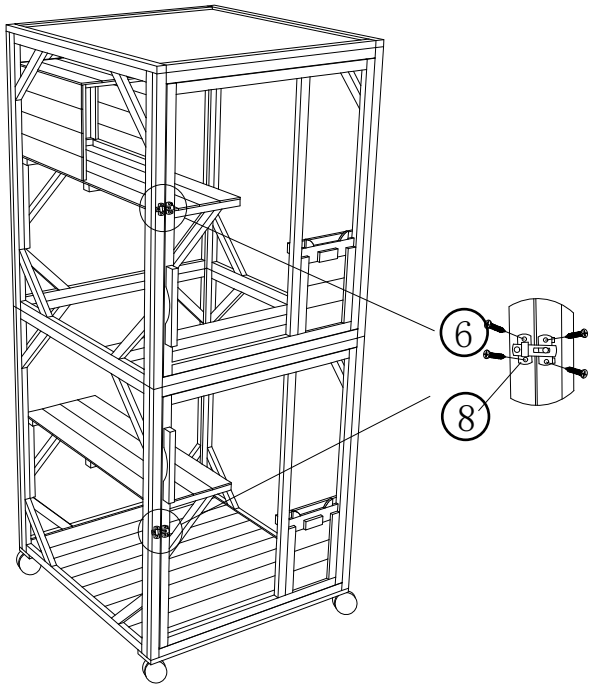

⑥ M3*16=8pcs

STEP 11

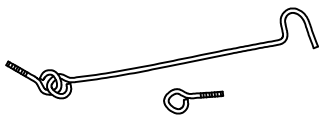

⑦

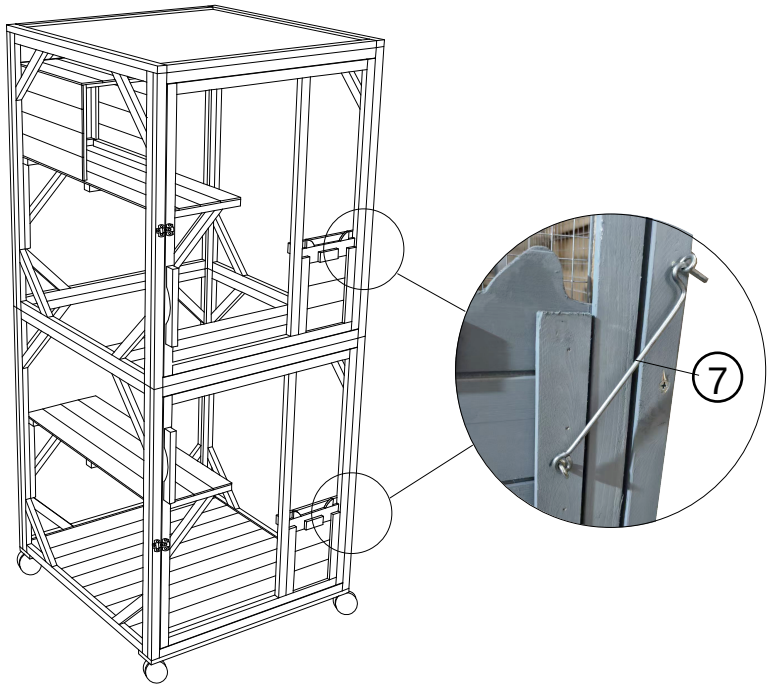

Questions & Answers about Proposition 65

• What is Proposition 65?

Proposition 65 requires businesses to provide warnings to Californians about significant exposures to chemicals that cause cancer, birth defects or other reproductive harm. These chemicals can be in the products that Californians purchase, in their homes or workplaces, or that are released into the environment. By requiring that this information be provided, Proposition 65 enables Californians to make informed decisions about their exposures to these chemicals.

Proposition 65 also prohibits California businesses from knowingly discharging significant amounts of listed chemicals into sources of drinking water.

Proposition 65 requires California to publish a list of chemicals known to cause cancer, birth defects or other reproductive harm. This list, which must be updated at least once a year, has grown to include approximately 900 chemicals since it was first published in 1987.

• What types of chemicals are on the Proposition 65 list?

The list contains a wide range of naturally occurring and synthetic chemicals that include additives or ingredients in pesticides, common household products, food, drugs, dyes, or solvents. Listed chemicals may also be used in manufacturing and construction, or they may be byproducts of chemical processes, such as motor vehicle exhaust.

• What does a warning mean?

If a warning is placed on a product label or posted or distributed at a workplace, a business, or in rental housing, the business issuing the warning is aware or believes that it is exposing individuals to one or more listed chemicals.

By law, a warning must be given for listed chemicals unless the exposure is low enough to pose no significant risk of cancer or is significantly below levels observed to cause birth defects or other reproductive harm.

• Where can I get more information on Proposition 65?

If you have specific questions on the administration or implementation of Proposition 65, you can contact OEHHA's Proposition 65 program at P65.Questions@oehha.ca.gov, or by phone at (916) 445-6900.