Assembly Instruction

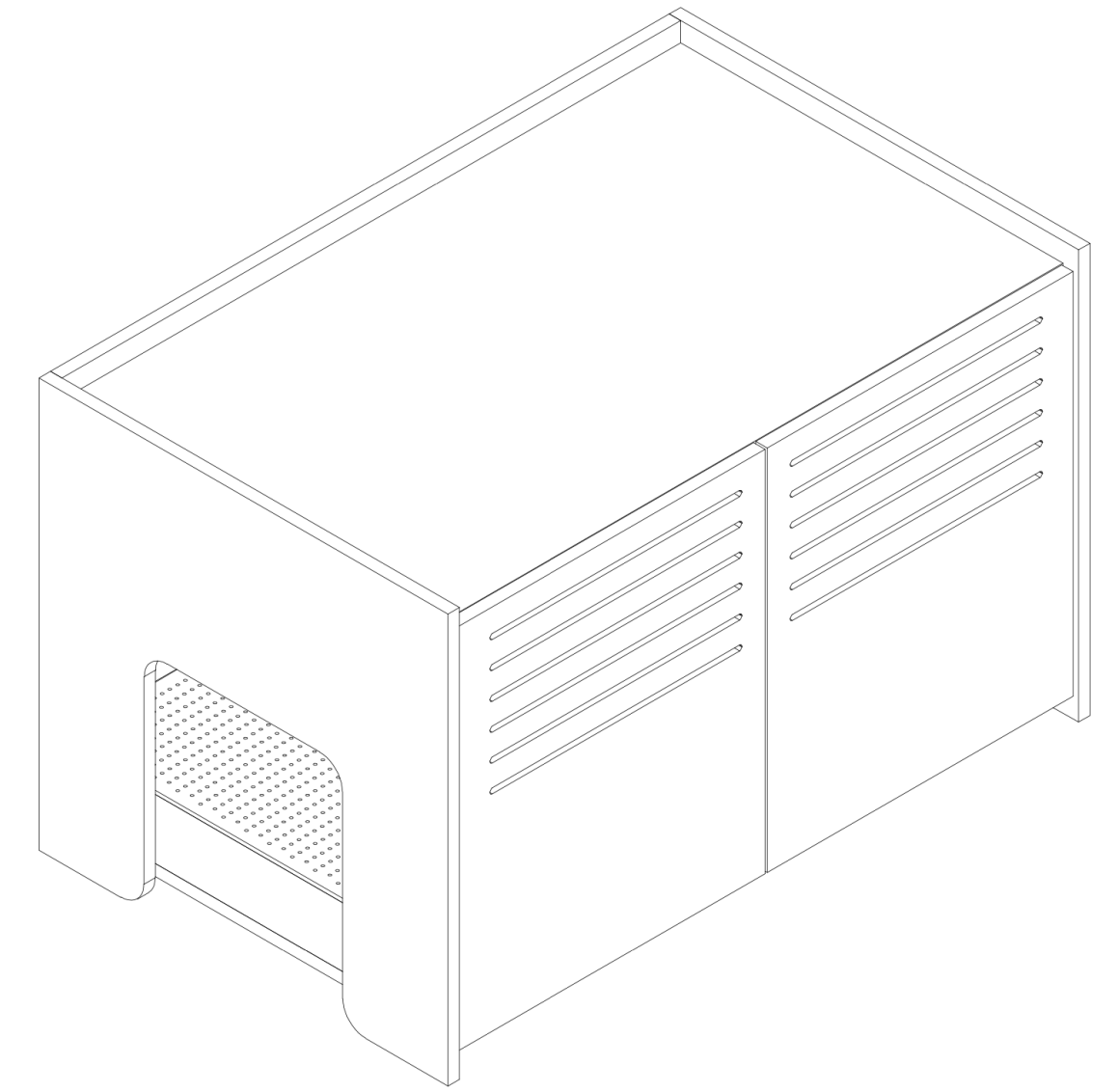

Product name

Cat Litter Box Enclosure

The Accessories

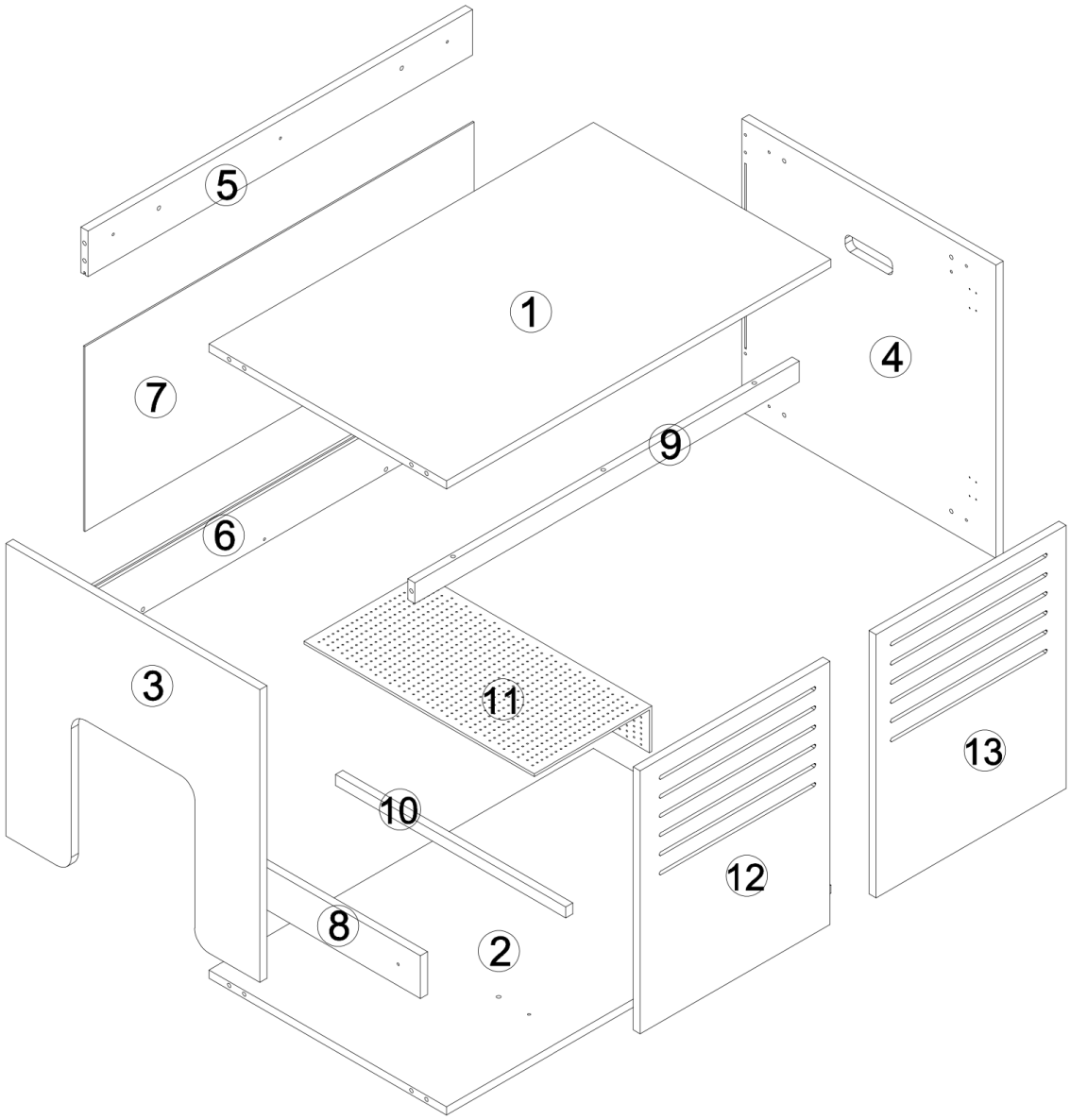

The Hardware

Code	Description	Qty	Code	Description	Qty
A	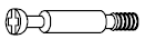 ϕ6x35mm	24	G	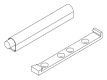	2
B	 ϕ15x10mm	24	H		2
C	 ϕ6x30mm	15	I	 ϕ3x12mm	2
D	 ϕ4x25mm	4	J	 ϕ3x16mm	4
E	 ϕ3x14mm	30	K	 ϕ4x40mm	2
F		4			

Purchased it from who will be able to resolve any issues.

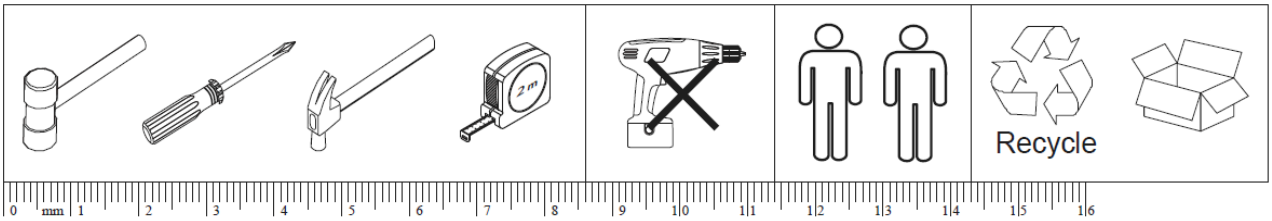

Assembling

Step1

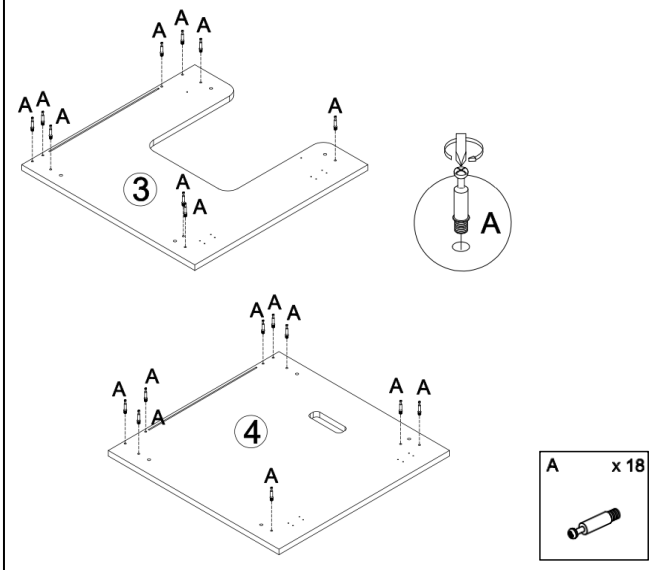

Step 2

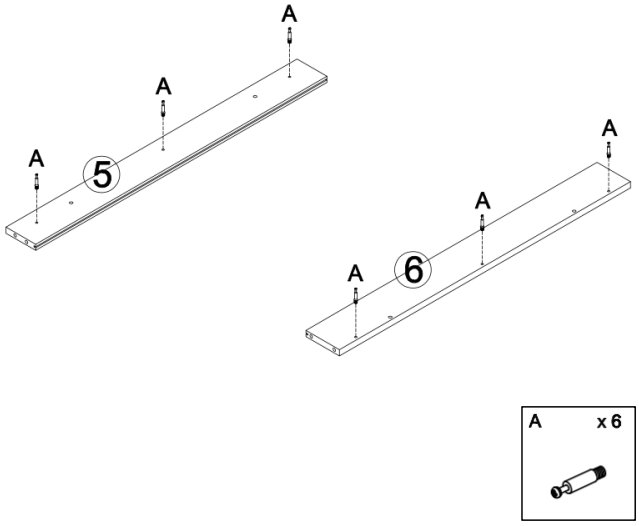

Step 3

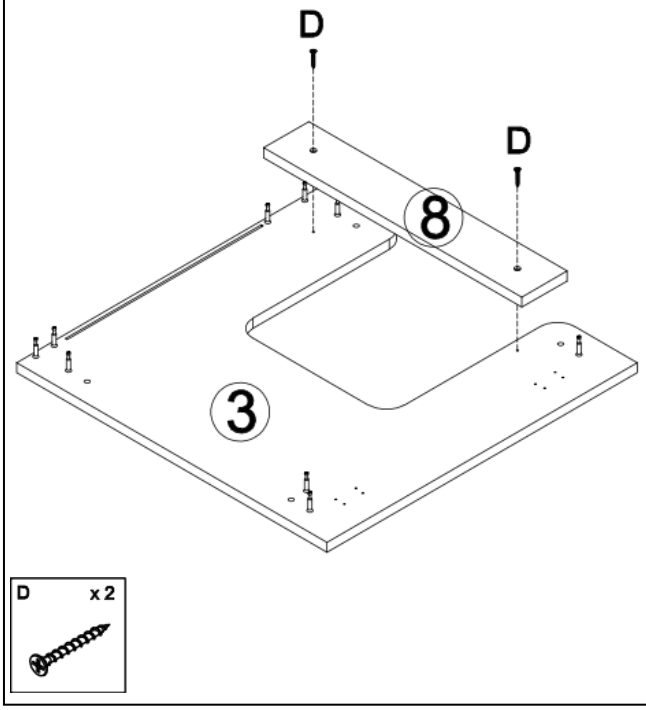

Step 4

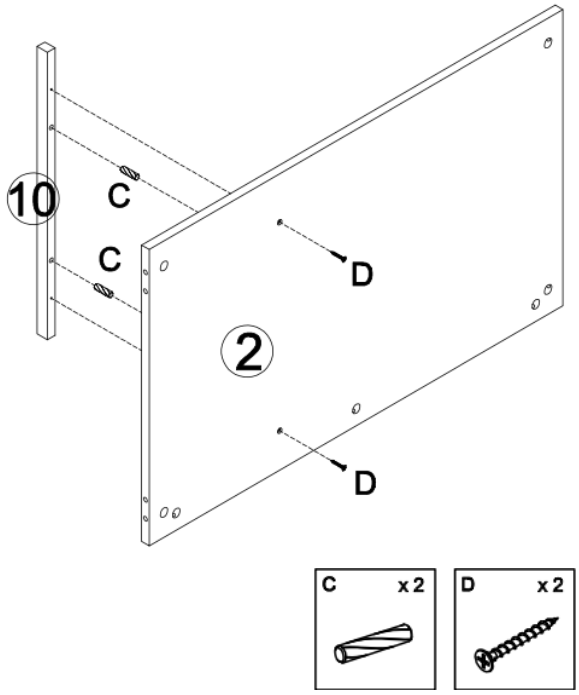

Step 5

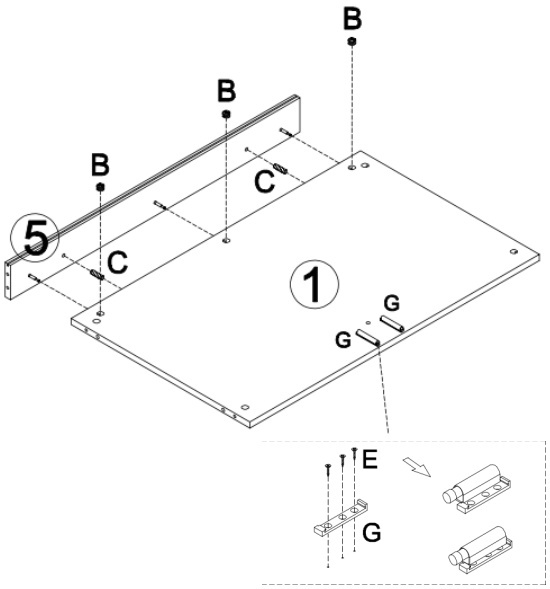

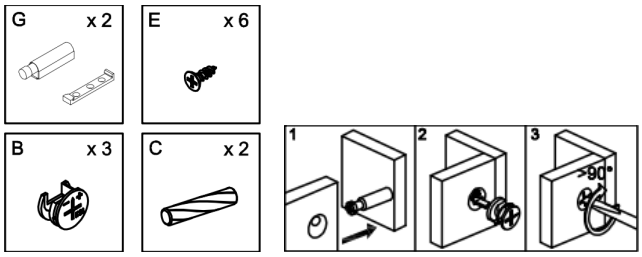

Step 6

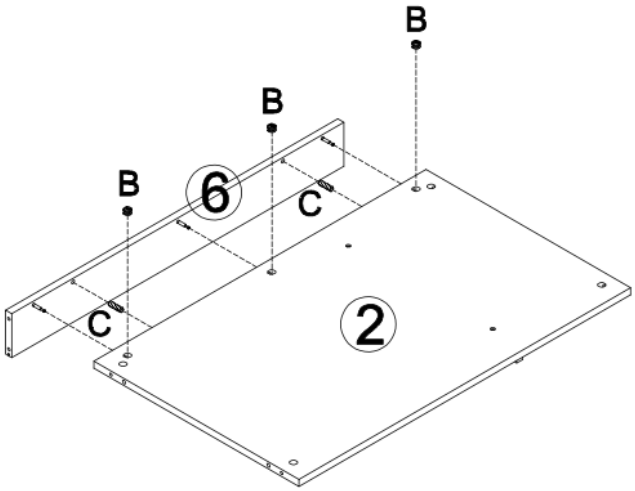

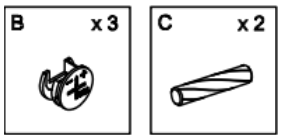

Step 7

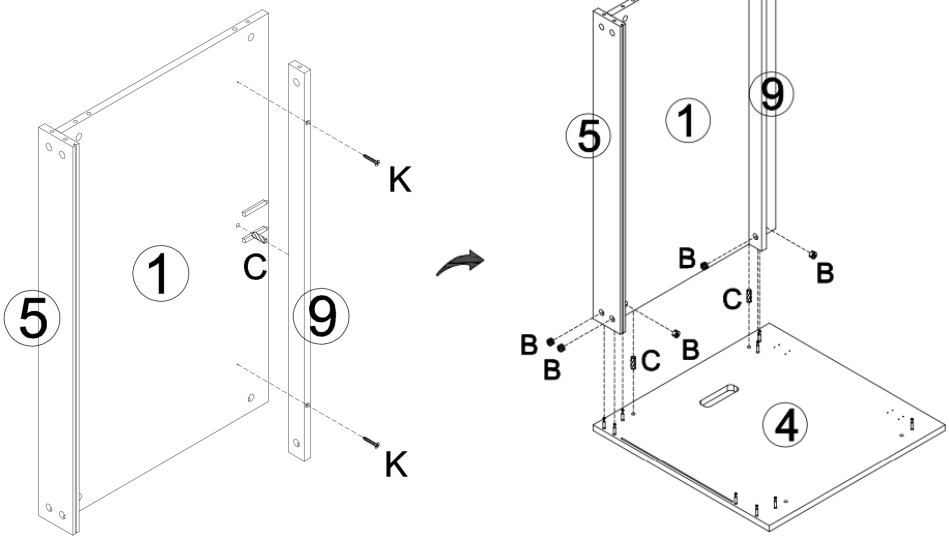

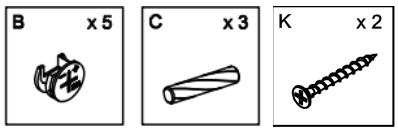

Step 8

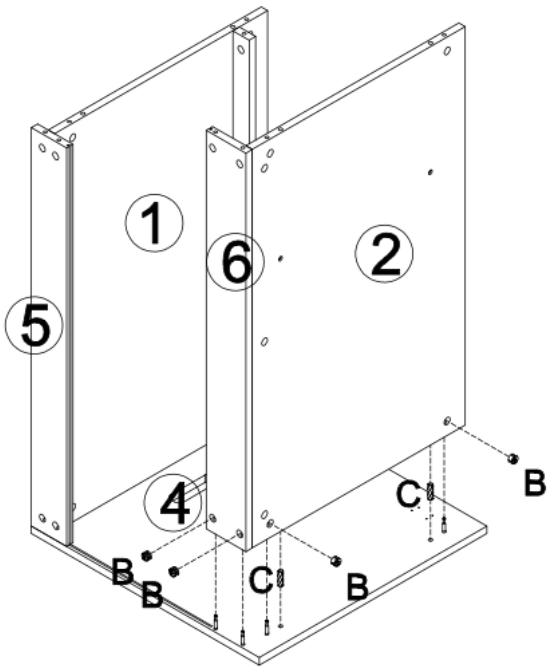

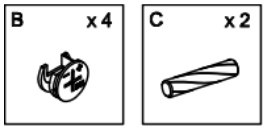

Step 9

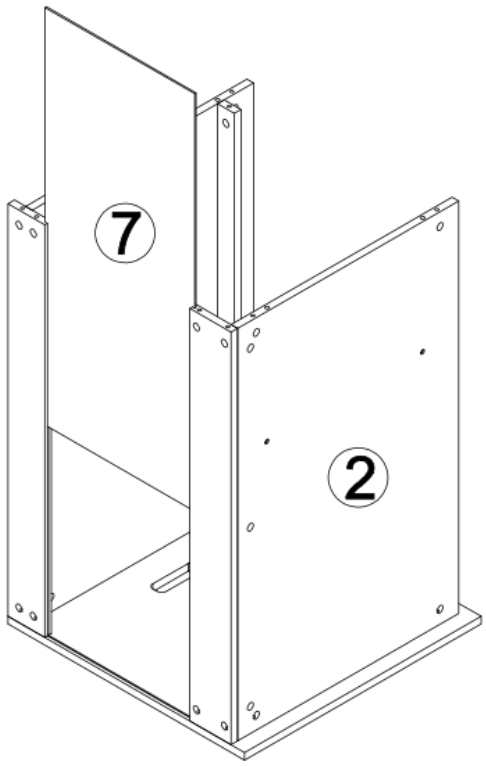

Step 10

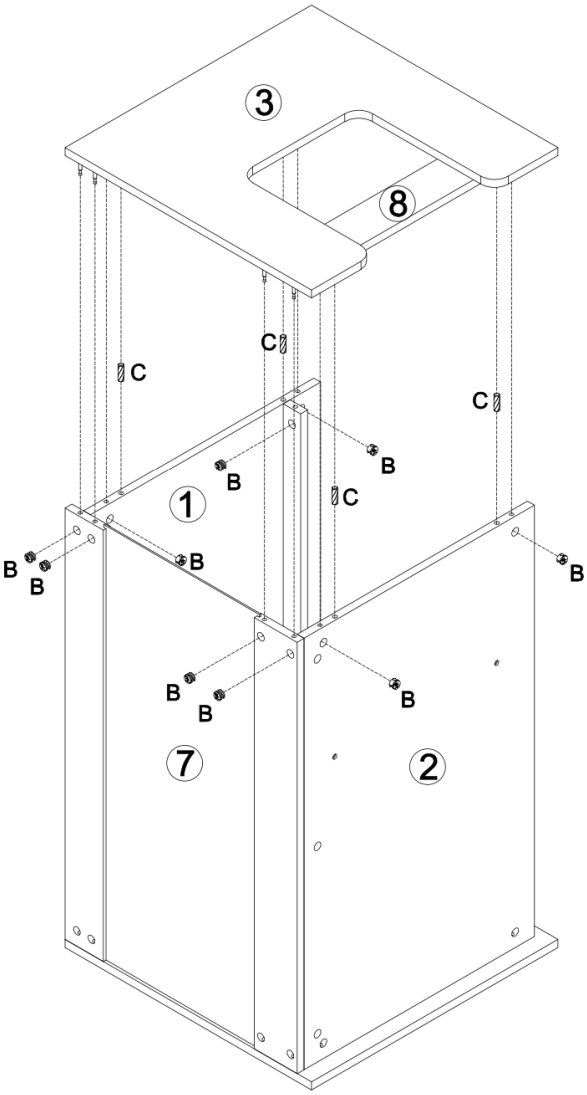

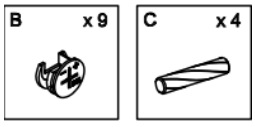

Step 11

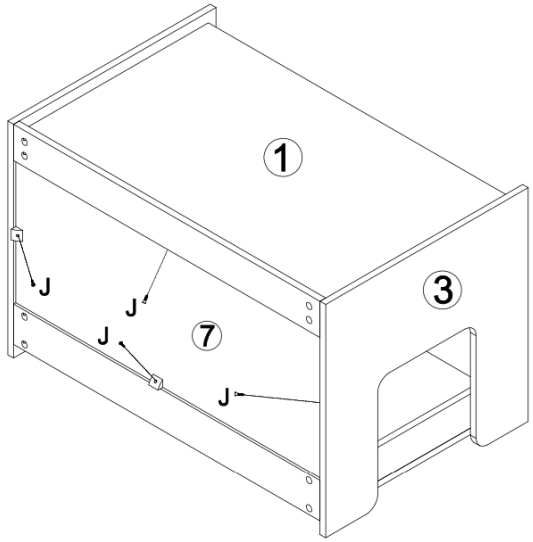

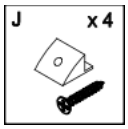

Step 12

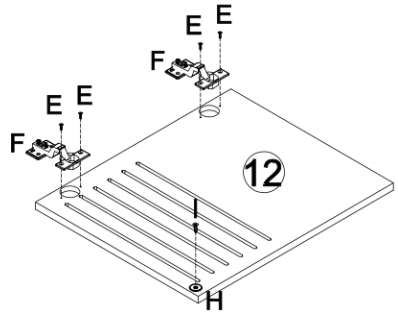

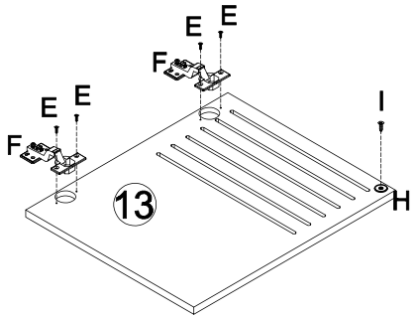

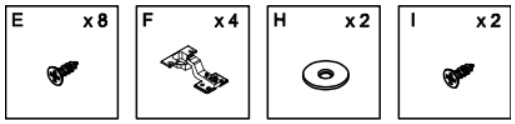

Step 13

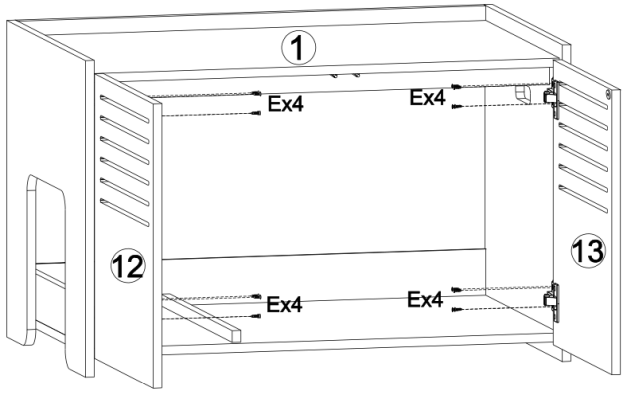

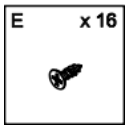

Step 14

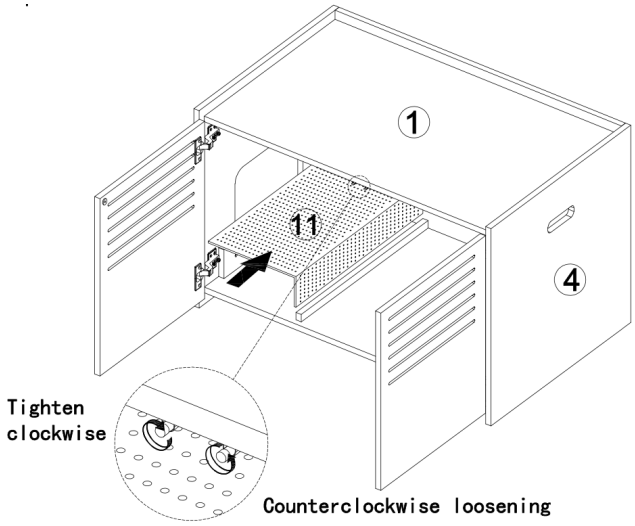

Assembly Guidelines & Precautions

Guidelines

- Read and follow the instructions carefully during assembly and use.
- Keep this manual for future reference or contact after-sales for support.
- If any parts are missing or defective upon unpacking, stop assembly and contact us for replacements.

Precautions

- For indoor use only. Follow the manual for correct assembly and use. Any modifications may result in injury or damage. The seller is not responsible for misuse or improper assembly.
- Keep the product away from fire, heat, and direct sunlight. Avoid placing hot objects on it.
- Assemble on a spacious surface. Do not place parts directly on the ground to avoid damage.
- Do not stand or sit on any part of the furniture.
- Wear gloves during assembly to avoid injury from sharp edges.
- Match parts by their numbers in the manual. Loosely align all screws before tightening them.
- Regularly check screw tightness and re-tighten if needed to ensure stability.
- Keep the product away from sharp objects and corrosive substances to prevent damage.

Warning

- Children should not assemble this product. Keep small parts and packaging out of children's reach to avoid choking or suffocation risks.
- In case of accidental spills, turn off any connected power immediately.