INSTALLATION AND SAFETY INSTRUCTIONS

FOR YOUR SAFETY

WARNING: BE SURE THE ELECTRICITY TO THE WIRES YOU ARE WORKING ON IS SHUT OFF; EITHER THE FUSE IS REMOVED OR THE CIRCUIT BREAKER IS SHUT OFF.

GENERAL

You don't need special tools to install this fixture. Be sure to follow the steps in the order given. Under no circumstances should a fixture be hung on house electrical wires, nor should a swag type fixture be installed on a ceiling, which contains a radiant type heating system. Read instructions carefully. If you are unclear as to how to proceed, consult a qualified electrician

NOTE: Proper wiring is essential for the safe operation of this fixture.

FIXTURE ASSEMBLY

Carefully remove the fixture from the carton and check that all parts are included as shown in figure. Be careful not to misplace any of the screws or parts, which are needed to install this fixture.

STEP 1: Place the shade (L) on the iron plate (M), and secure with the screws (N). Then place the metal frame (K) over the shade (L).

INSTALLATION

IMPORTANT: Do not attach fixture directly to outlet box.

STEP 1: Secure the mounting bar (A) to outlet box with the outlet box screws (B).Thread the nut (D) onto the nipple (E) so that five threads are exposed above the nut (D). Insert the lock washer (C) and thread the nipple (E) into the mounting bar (A), then secure with the nut (D).

STEP 2: Thread the screw collar (H) onto the nipple (E). Slide the screw collar ring (G) and the canopy (F) over the chain (I). Open one link of chain (I), connect it to fixture loop (J). Open the other one link of chain (I), connect it to collar loop (H) and close the link.

BE SURE TO CLOSE ALL CHAIN LINKS COMPLETELY.

STEP 3: Lace wires up through chain (I) and pas wires through holes in collar loop (H). We recommend lacing wire up through every other link of chain (I).

GROUNDING INSTRUCTIONS

STEP 1: Insert the green grounding screw into the hole with two raised dimples on the mounting bar. Wrap the ground wire from the fixture (if supplied) around the green grounding screw, then connect it to ground wire from the outlet box (if not fixed on the outlet box) using a wire connector (not supplied). If ground wire from the fixture is not supplied, wrap the ground wire (if not fixed on the outlet box) from the outlet box around the green grounding screw and tighten it.

NEVER CONNECT GROUND WIRE TO BLACK OR WHITE POWER SUPPLY WIRES.

STEP 2: Take note of the color of the wire(s) on your fixture. Identify which group your fixture wire(s) falls into and connect the wires according to the directions below:

GROUP A: Connect to Black House Wire	GROUP B: Connect to White House Wire
BLACK	WHITE
*PARALLEL WIRE (round & smooth)	*PARALLEL WIRE (square & ridged)
WHITE OR GREY WITH TRACER	WHITE OR GREY WITHOUT TRACER
BROWN GOLD OR BLACK WITHOUT TRACER	BROWN, GOLD OR BLACK WITH TRACER

*NOTE: When parallel wire (SPT-I & SPT-2) is used, the tracer wire is square shaped or ridged and the less tracer wire is round in shape or smooth (seen best when viewed from wire end.)

STEP 3: Take your fixture wire(s) from group A and place evenly against the black wire from the outlet box. Do NOT twist wires together before using wire connectors

STEP 4: Fit a wire connector over the wires and screw the connector clockwise until you feel firmness.

STEP 5: Try gently to pull the connector off the wires. If you can pull the connector off, carefully re-do steps 3 and 4 as above and check again for a firm connection.

STEP 6: Connect the fixture wire from group B to the white wire from the outlet box in the same manner. Make sure no bare wires can be seen outside wire connectors.

FINAL ASSEMBLY

STEP 1: After wires are connected, place the canopy (F) on the ceiling and secure collar ring (G). Then tuck them carefully inside outlet box.

STEP 2: Thread the nut (P) onto the nipple (Q) and thread the nipple (Q) into the coupling (O).

STEP 3: Slide the tube (R), the cap (S), the metal washer (T), the plastic washer (U), the glass panel (V) and the plastic washer (W), the metal washer (X) onto the nipple (Q), then secure with the nut (Y).

STEP 4: Slide the cap (Z) onto the nipple (Q) and secure with the finial (A1).

STEP 5: Install lamps. (Please do not exceed the maximum capacity recommended on the socket.)

CLEANING
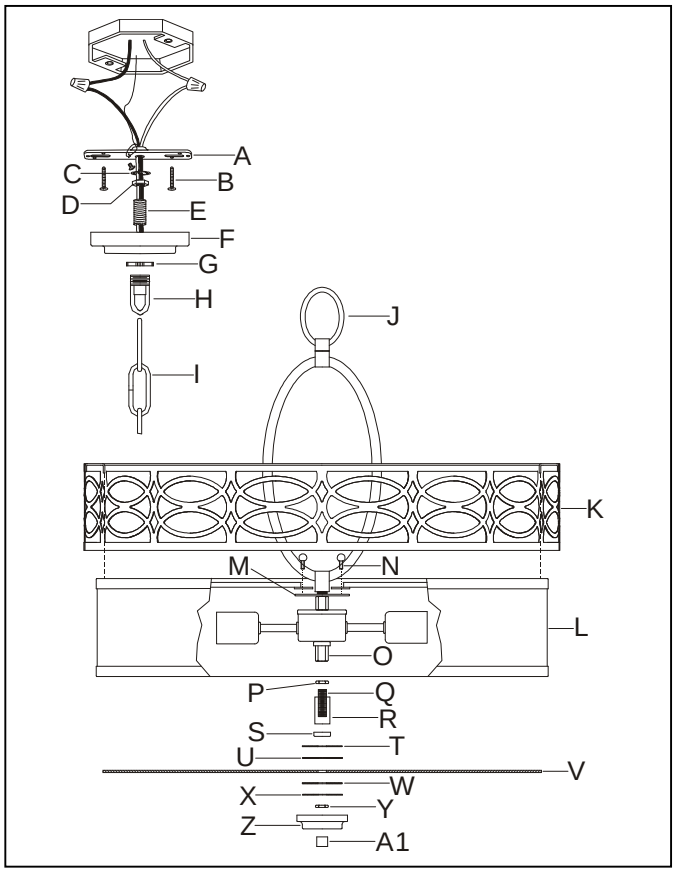
To clean, wipe fixture with a soft cloth. Clean glass with a mild soap. Do not use abrasive materials such as scouring pads or powders, steel wool or abrasive paper.