ASSEMBLE INSTRUCTION

Ax1



A① 1pc A② 5psc

Bx1

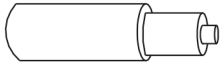

Cx5



Dx1

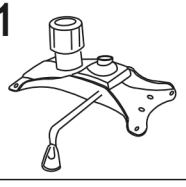

Ex1



Fx1

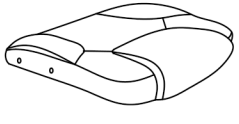

Mx1

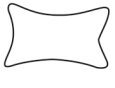

Gx2

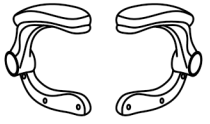

Hx10



M6x12MM

Ix4

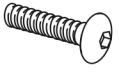

M6x20MM

Jx8

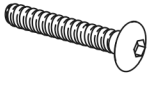

M6x25MM

Kx8



Lx1

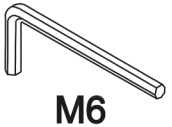

M6

1

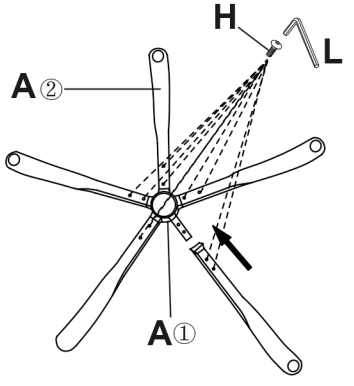

2

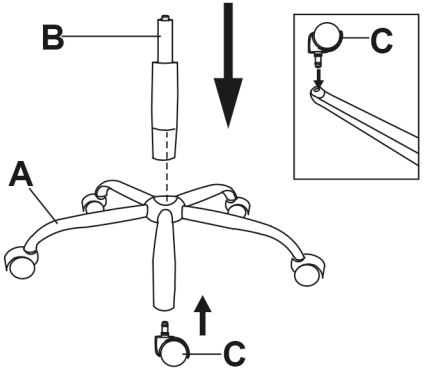

3

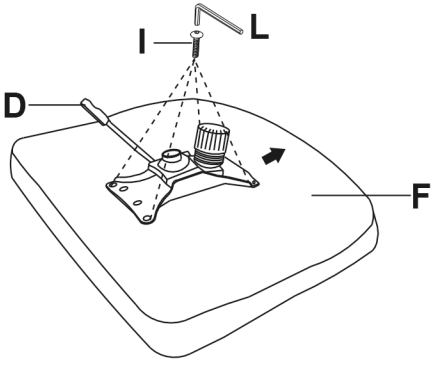

4

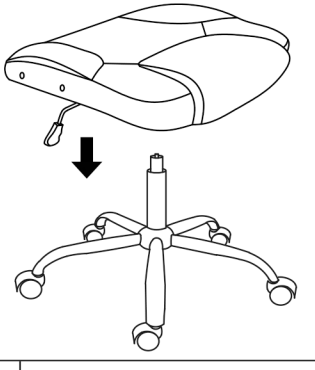

5

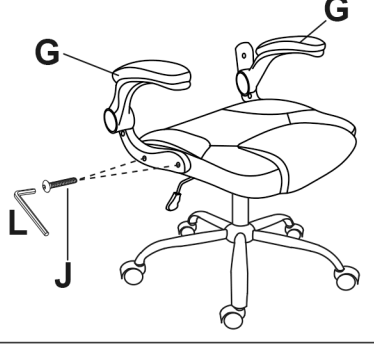

6

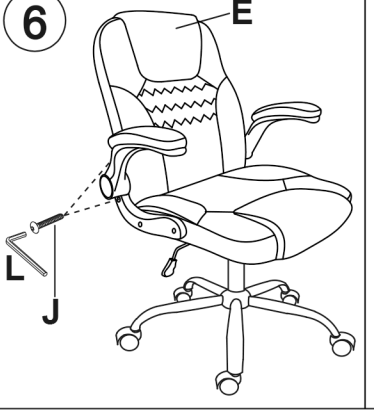

7

