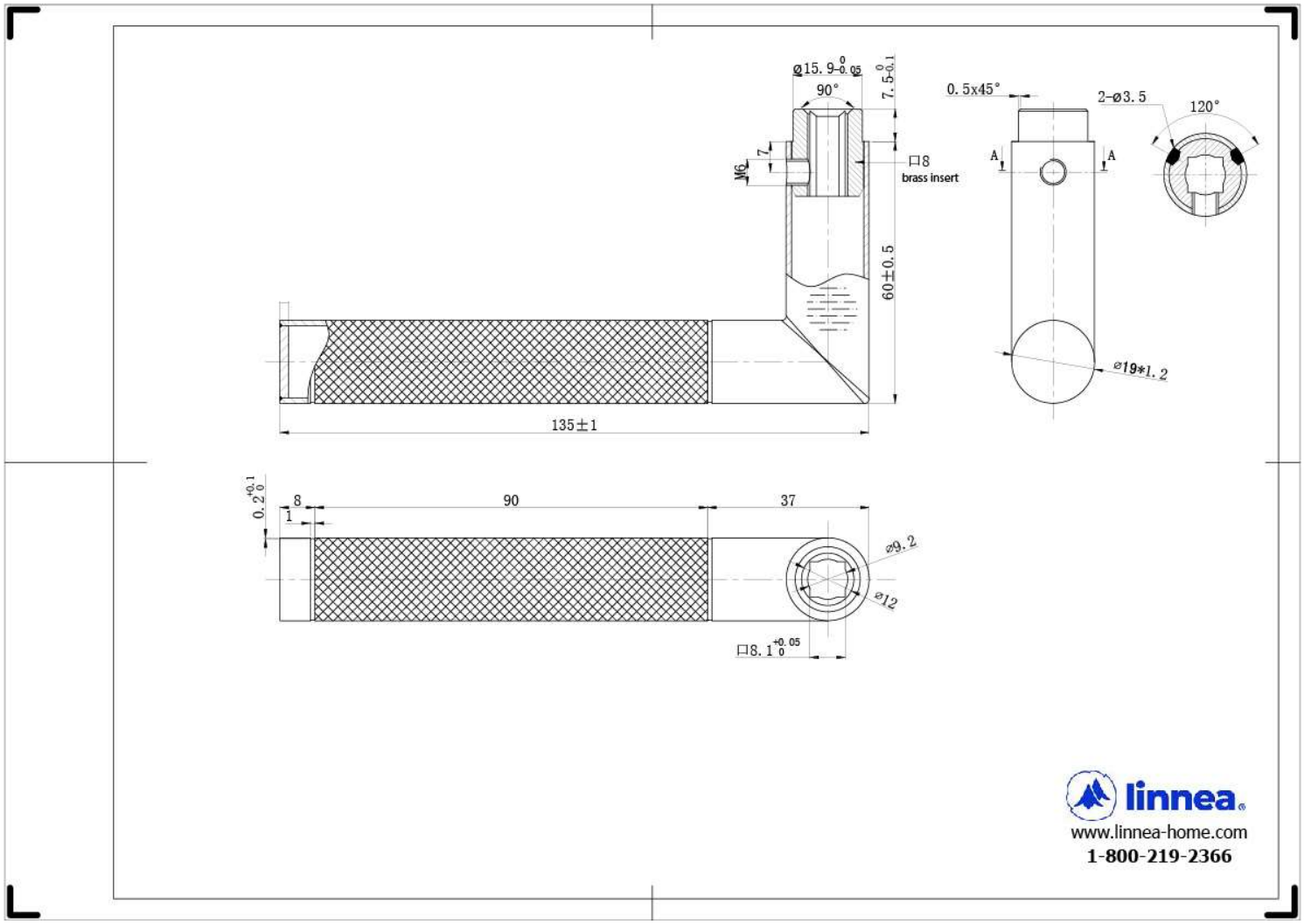
ø15.9-0.05 0
90°
7.5-0.1 0
0.5x45°
2-ø3.5
120°
7
M6
□8
brass insert
A
A
60±0.5
ø19*1.2
135±1
0.2 +0.1 0
8
1
90
37
ø9.2
ø12
□8.1 +0.05 0
linnea
www.linnea-home.com
1-800-219-2366