Nesting Coffee Table

MONTAJ KLAVUZU / ASSEMBLY MANUAL

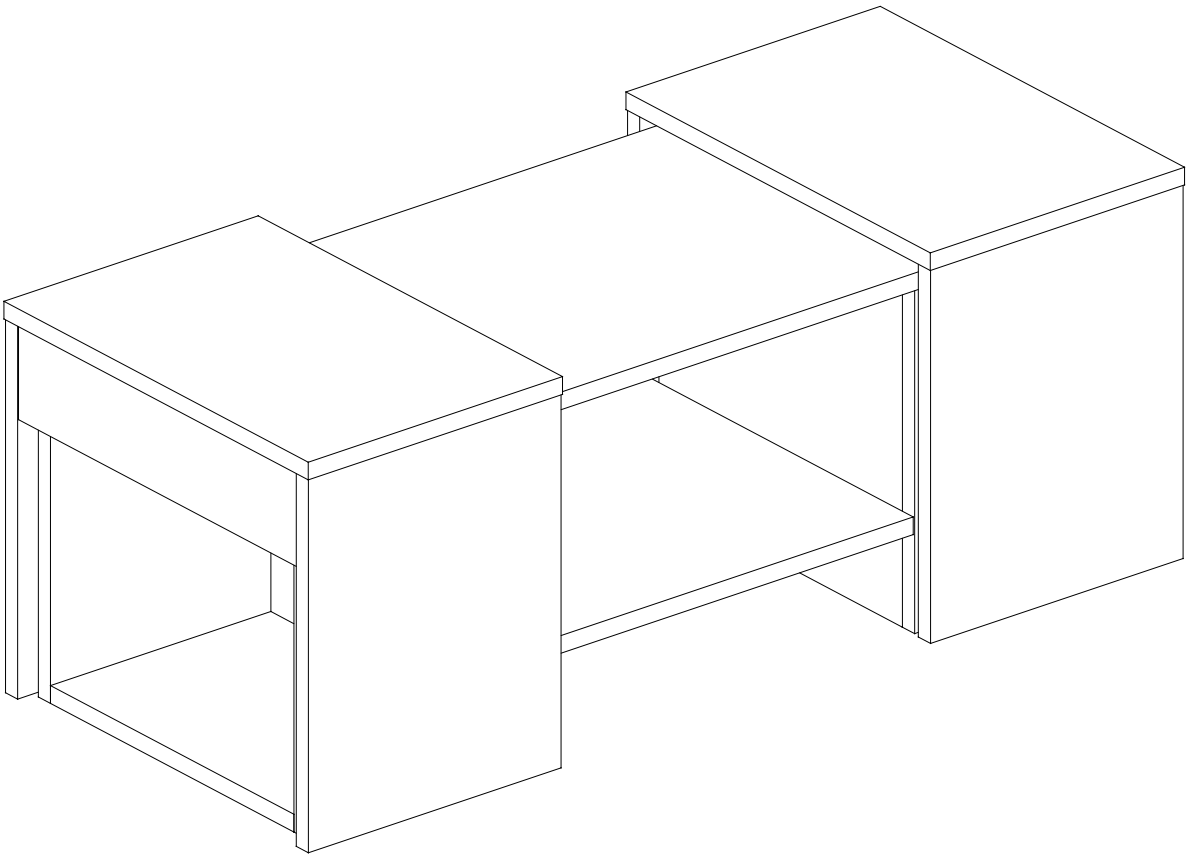

Scan the **QR code** to view the product video

Montaj videosuna ulaşmak için lütfen **QR kodunu** tarayınız.

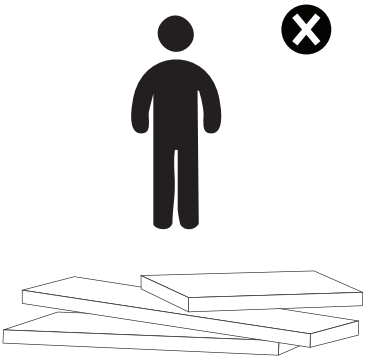

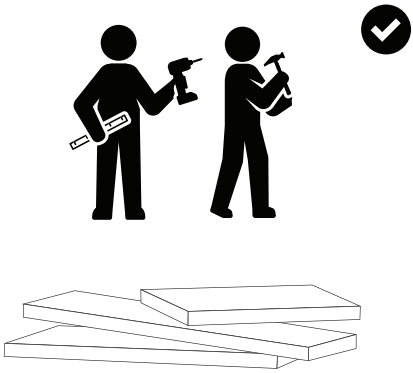

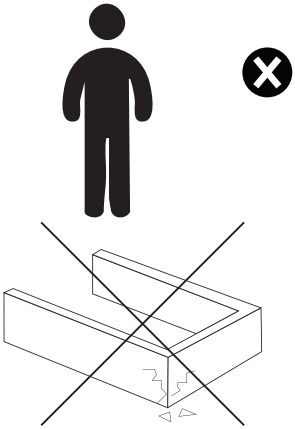

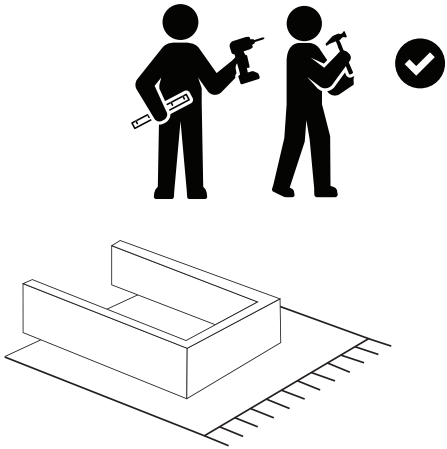

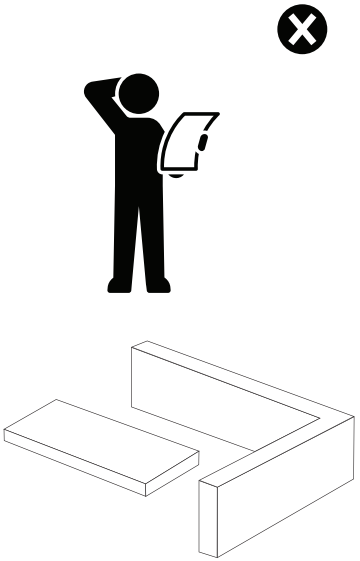

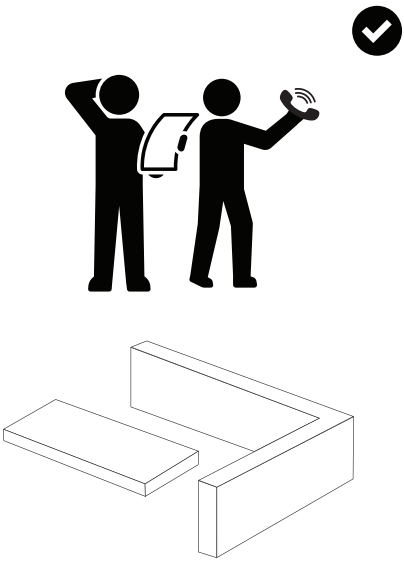

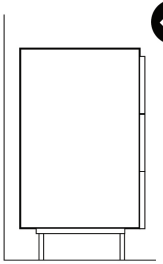

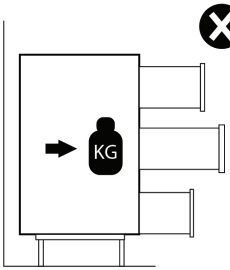
KG

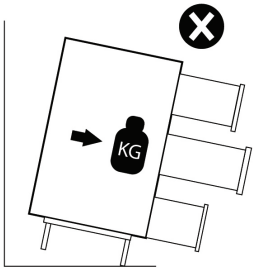
KG

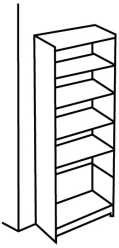

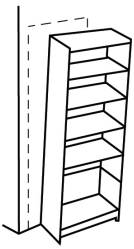

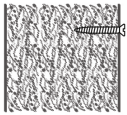

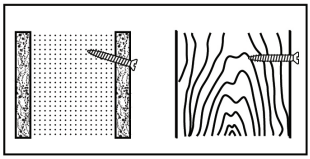

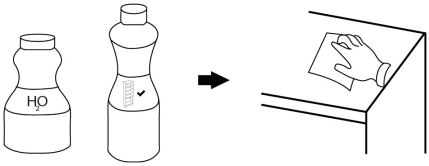
H2O

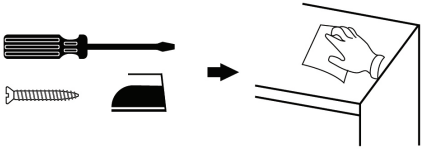

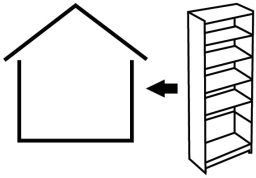

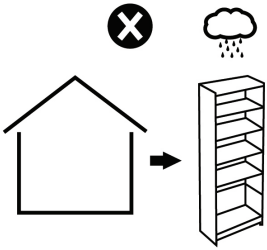

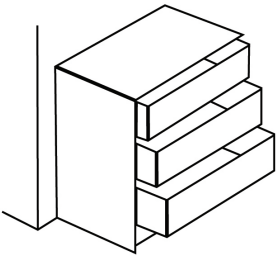

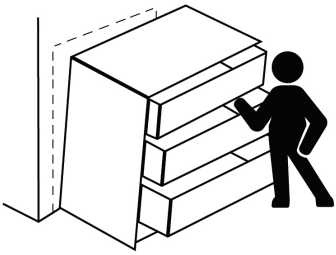

Dear Customer,

We are delighted to meet your needs and hope you enjoy our products. May they bring joy to you and your family.

Please be assured that this product has successfully passed all safety and health tests. Thank you for choosing us!

Assembly Recommendations

We kindly recommend checking the components and accessories listed in the installation guide before beginning assembly. If you have purchased multiple products (we're happy to hear that!), we suggest completing the assembly of the first product before moving on to the second.

We recommend that you clean all parts with a slightly damp cloth before assembling the product.

Safety Instructions

Please avoid using the products for purposes other than their intended use. It is crucial for the safety and well-being of you and your family to prevent any risk of injury. To ensure the longevity of the product, please keep it away from excessive heat, cold, and humidity.

WARNING!

Securing the furniture to the wall is highly recommended for your safety. Furniture tipovers can result in serious injuries or even fatal accidents. To prevent such risks, please ensure your furniture is securely fixed to the wall. Please note that fixing devices are not included in the package, as different wall types require different solutions. Use suitable fixing devices that you trust. If you are unsure which devices to use, we recommend consulting your local dealer for guidance. Do not undo or remove the drawer locking system.

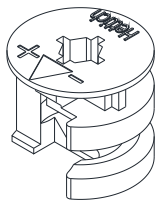

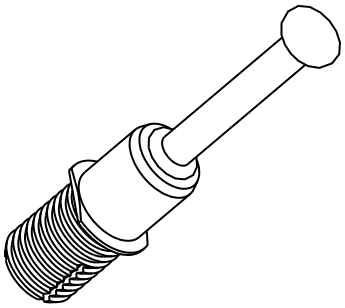

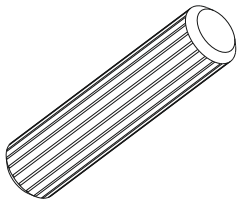

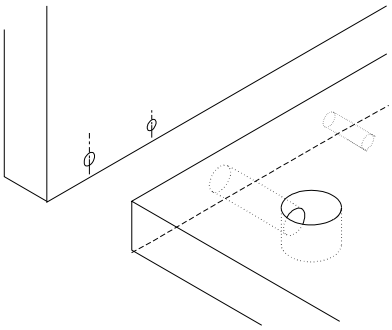

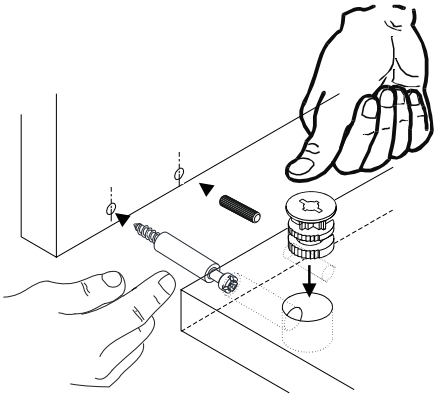

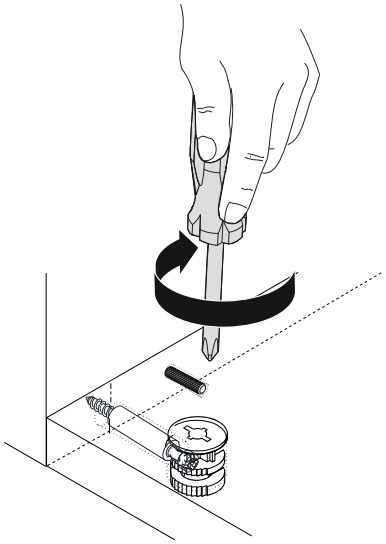

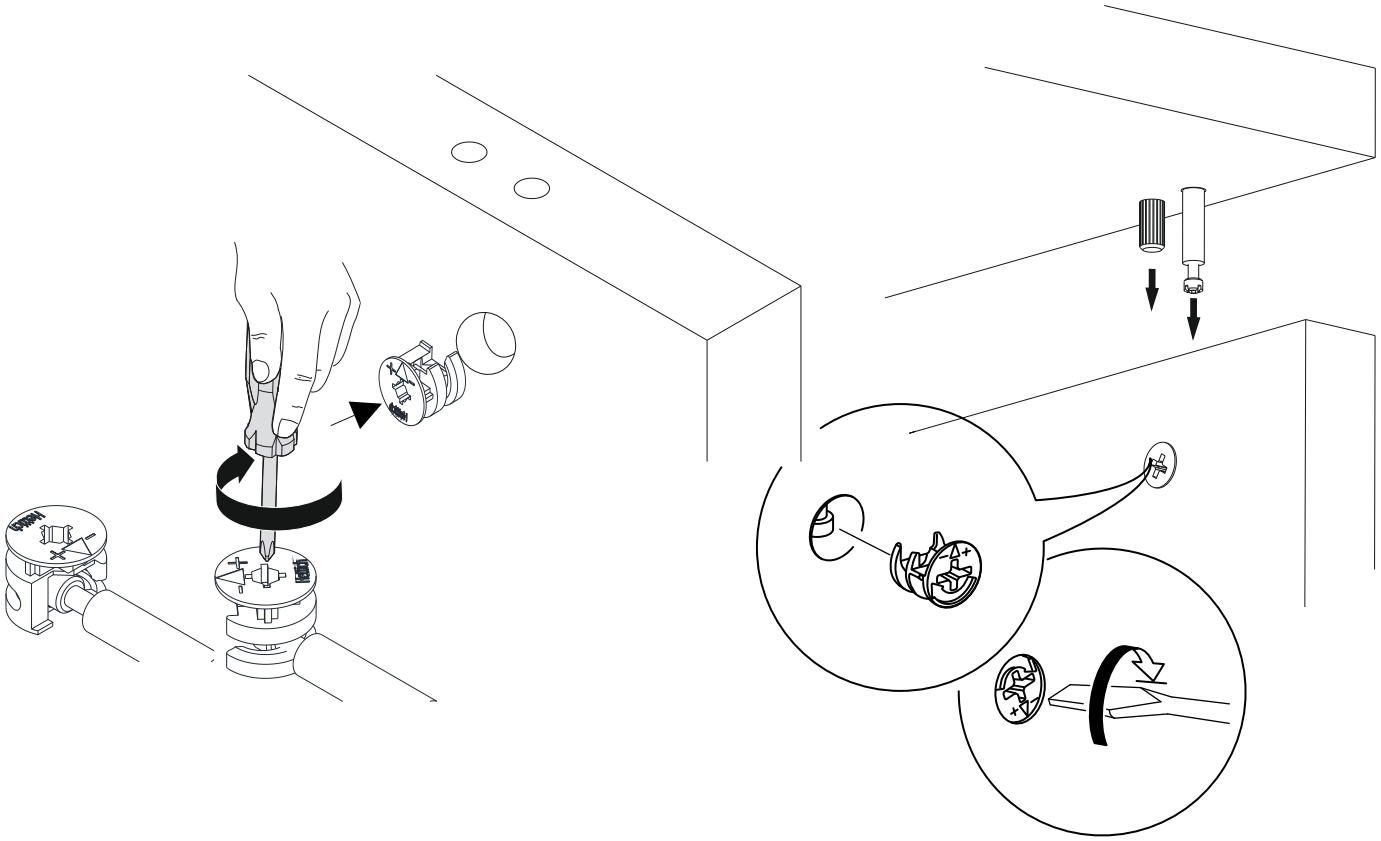

Aksesuarlar / Assembly Hardware

A23	A22	A04	A06 18 mm	A06 18 mm
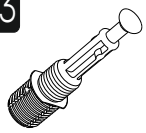 40x	40x	44x	1.Renk 28x	2.Renk 12x

1.RENK	/	2. RENK
CEVİZ	/	ANTRASİT
ATLANTİK	/	BUTE BEJ
BEYAZ	/	BEYAZ

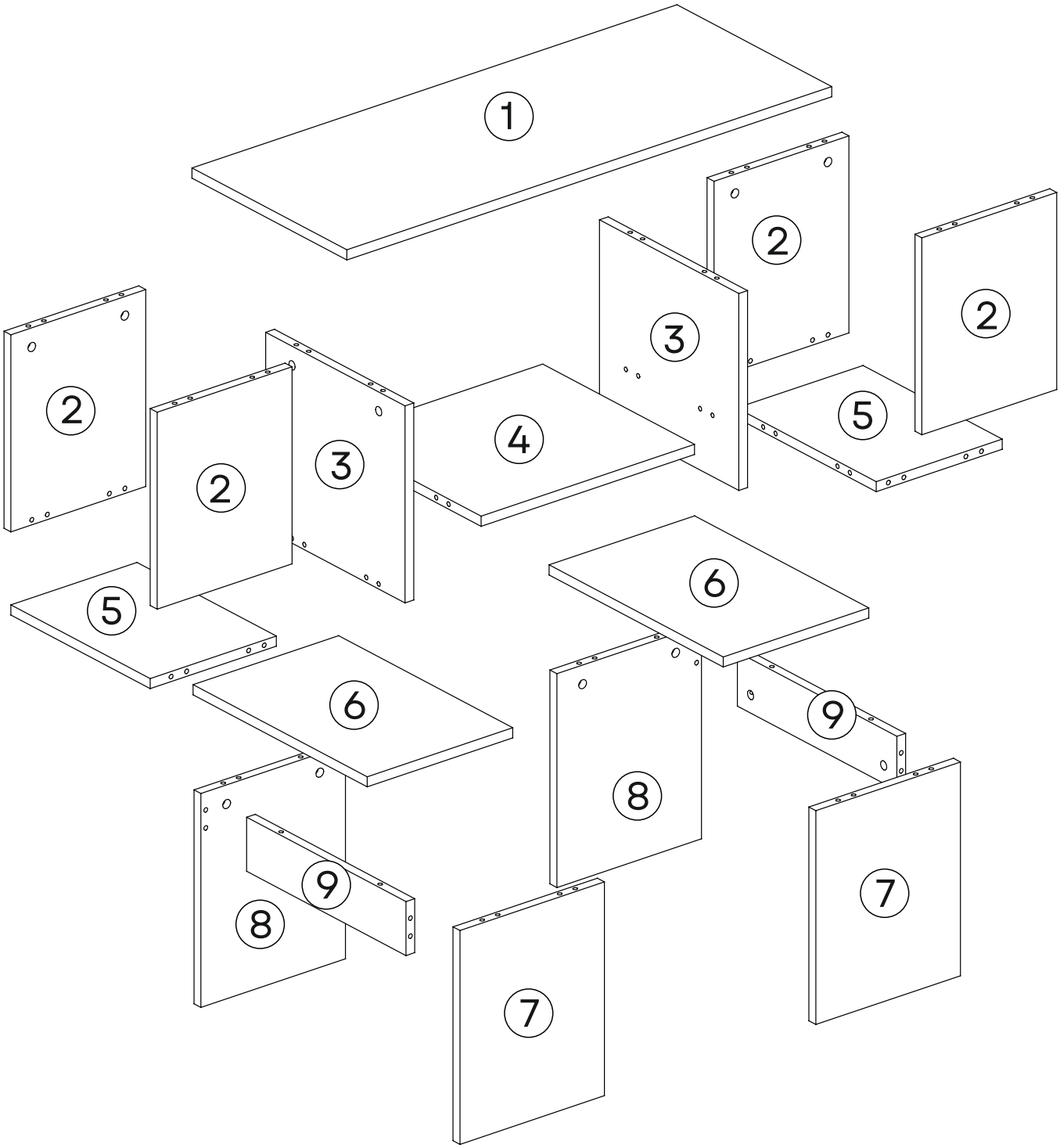

1

x2

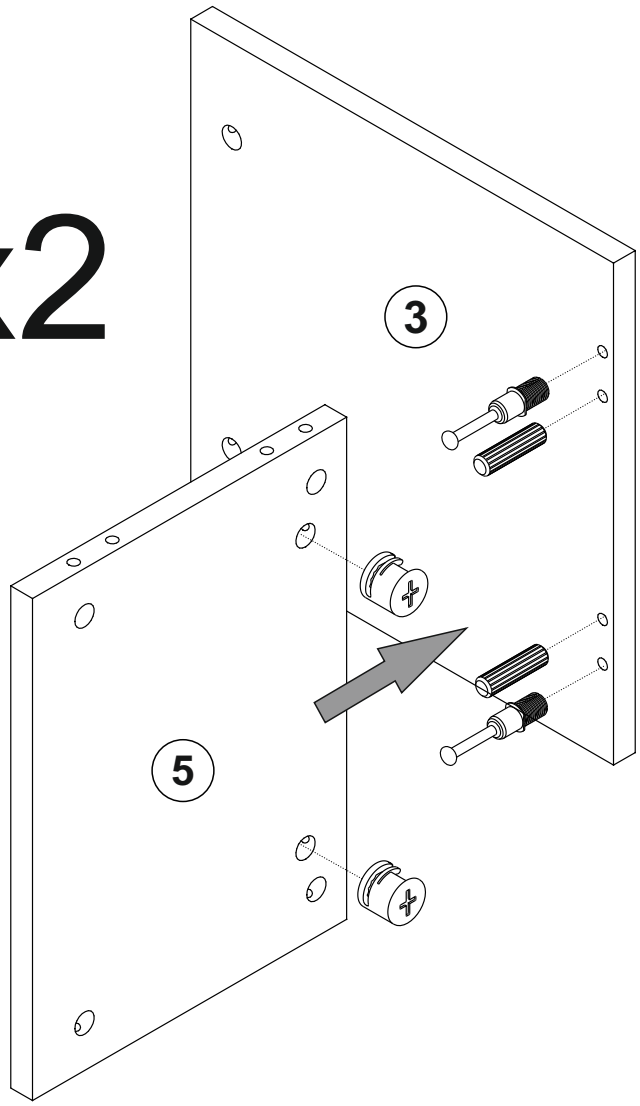

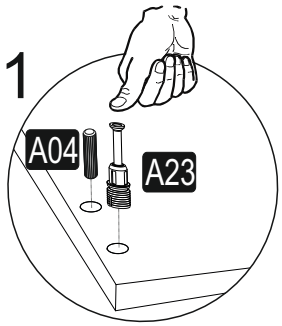

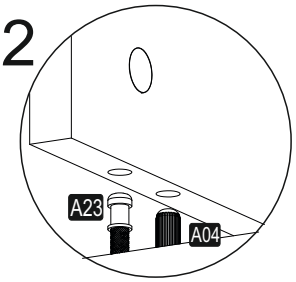

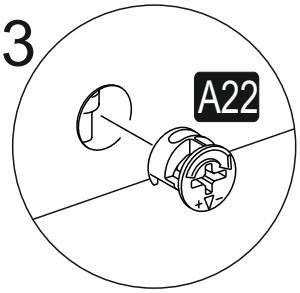

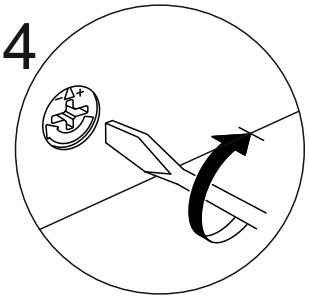

2

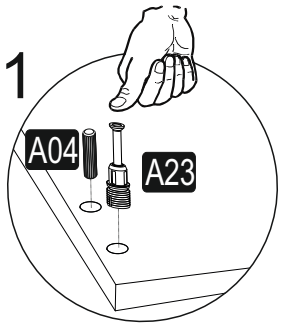

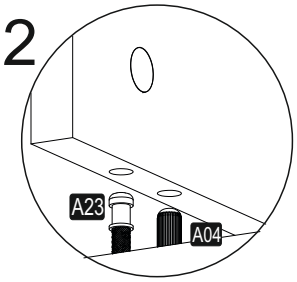

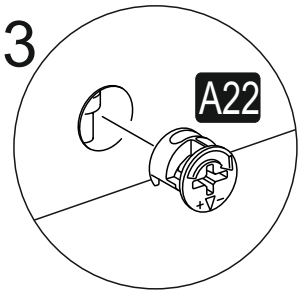

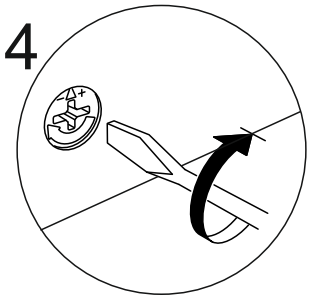

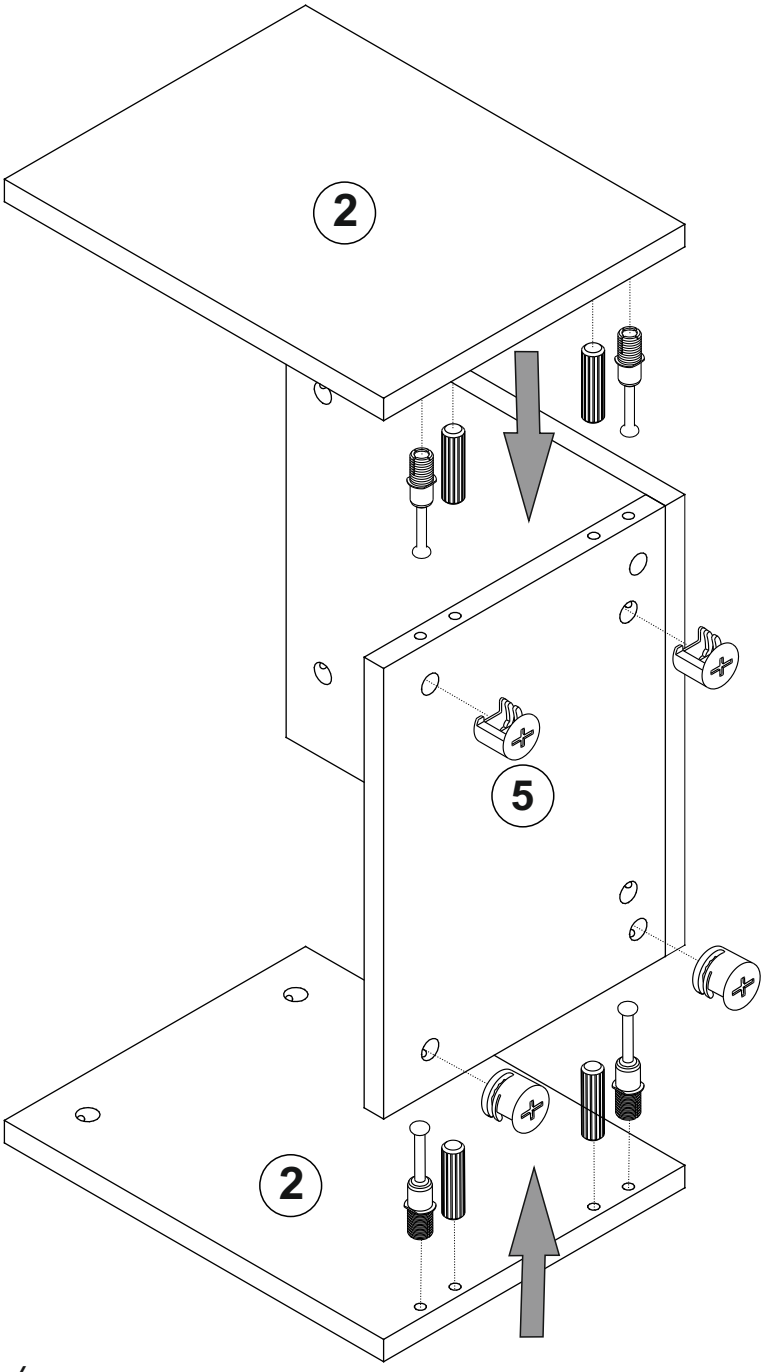

3

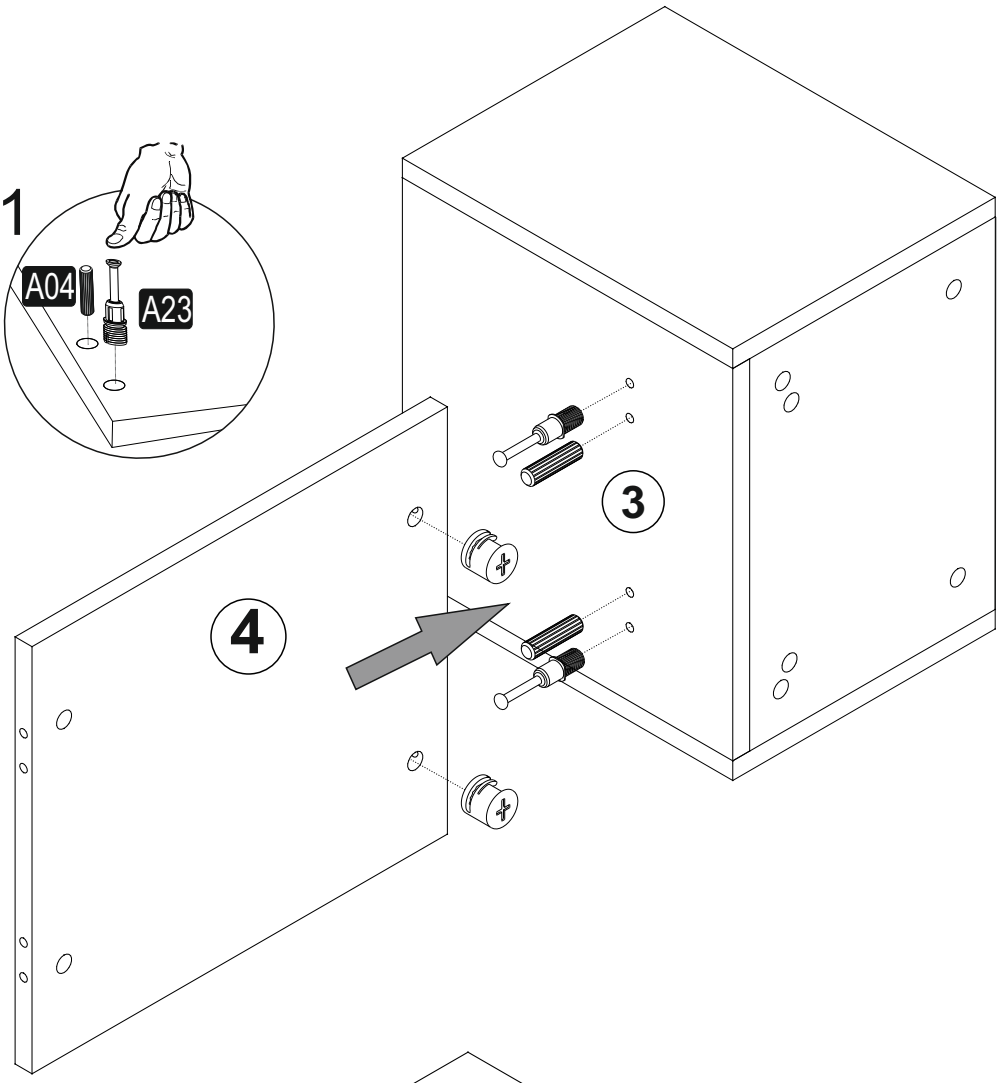

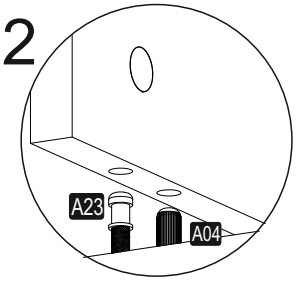

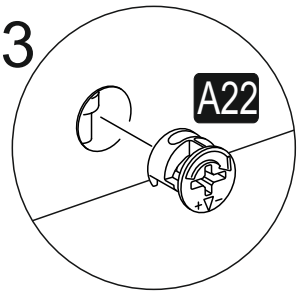

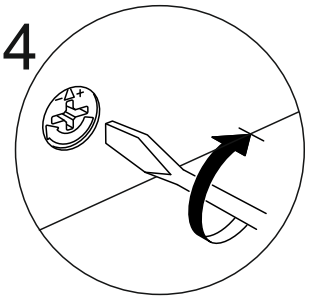

4

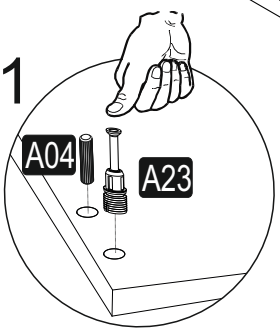

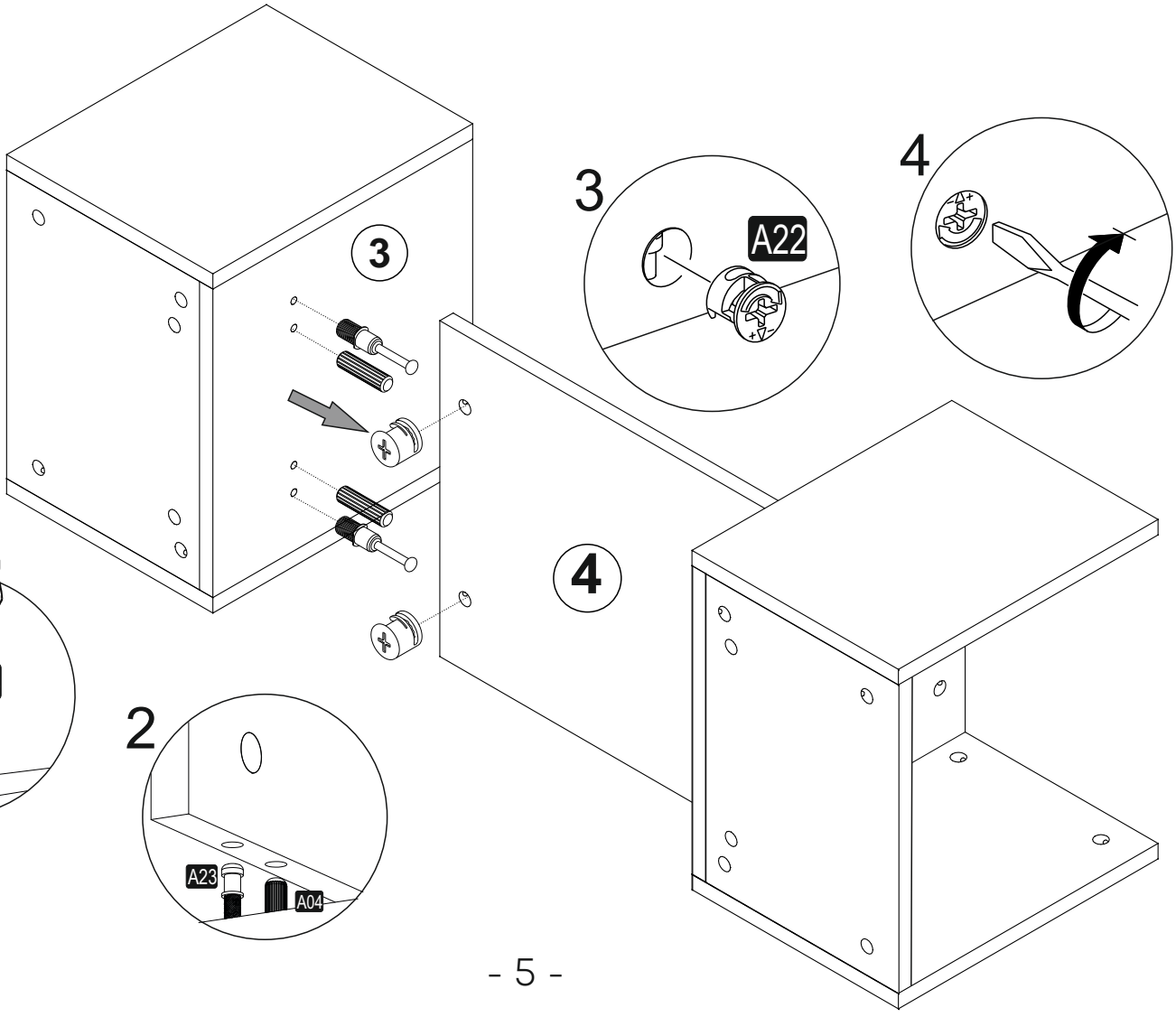

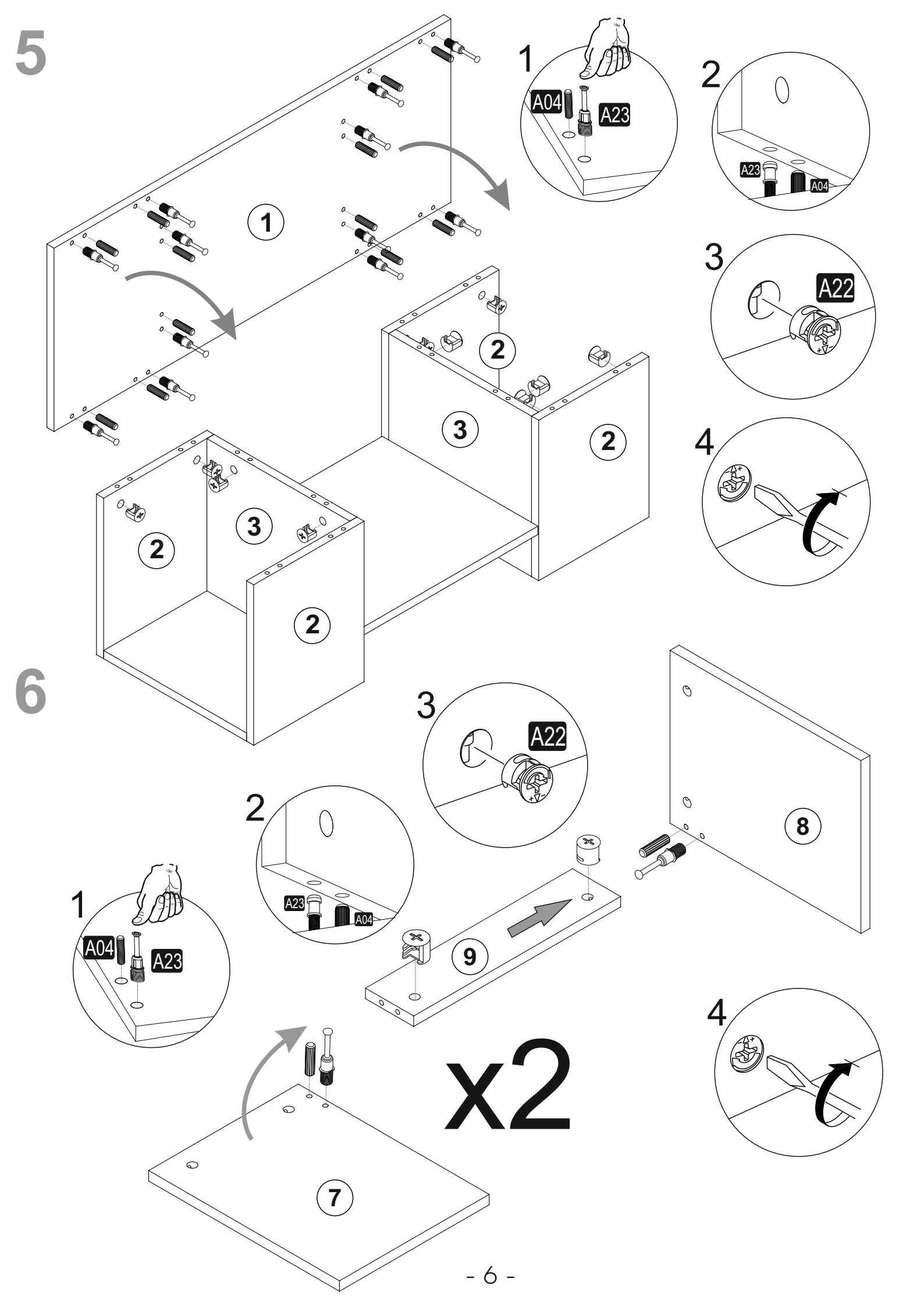
5
1
A04
A23
2
A23
A04
3
A22
4
1
2
3
2
3
2
2
6
3
A22
2
A23
A04
8
1
A04
A23
9
4
x2
7

7

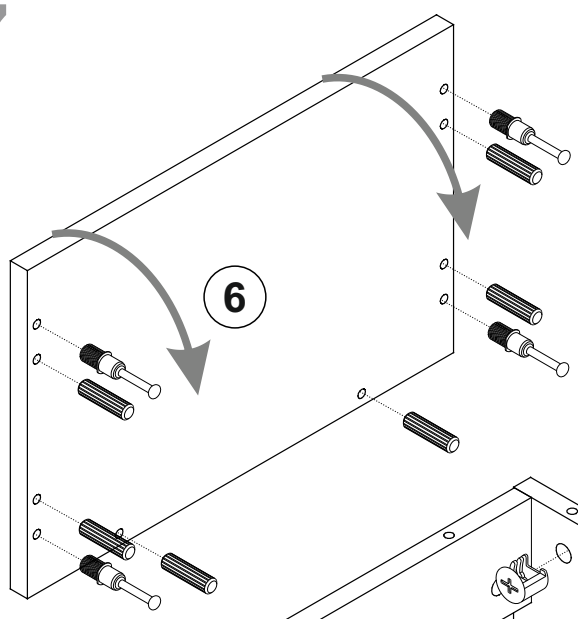

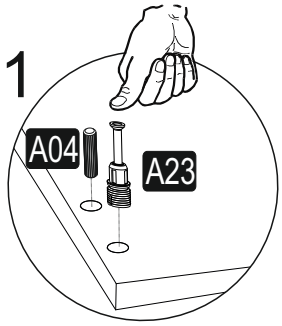

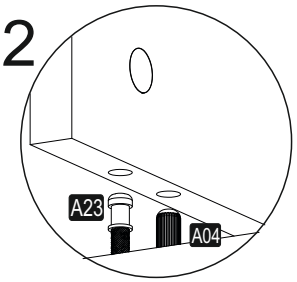

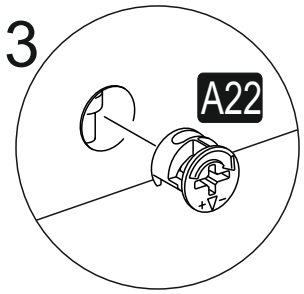

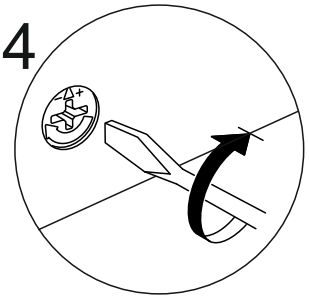

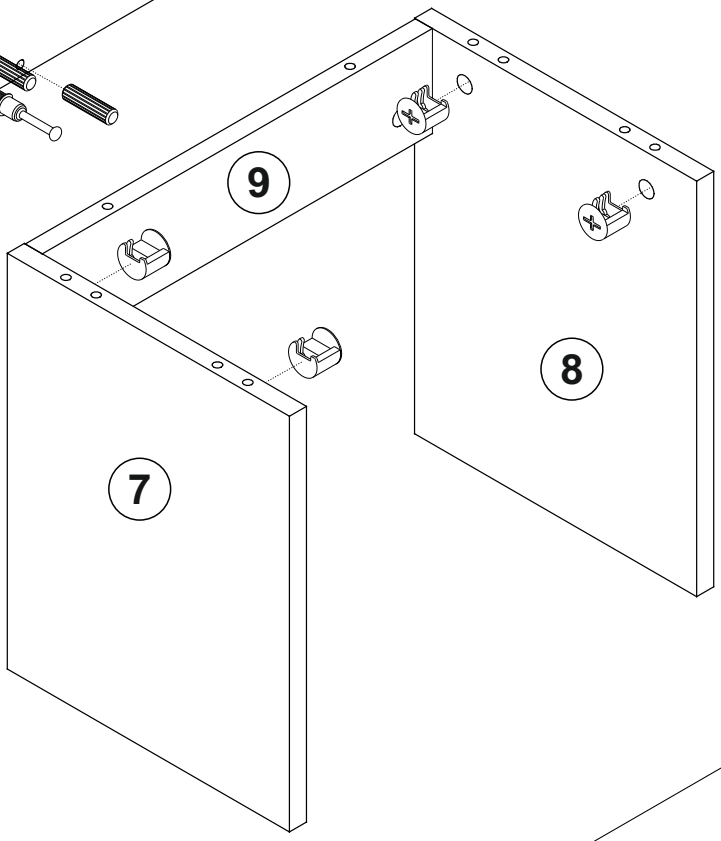
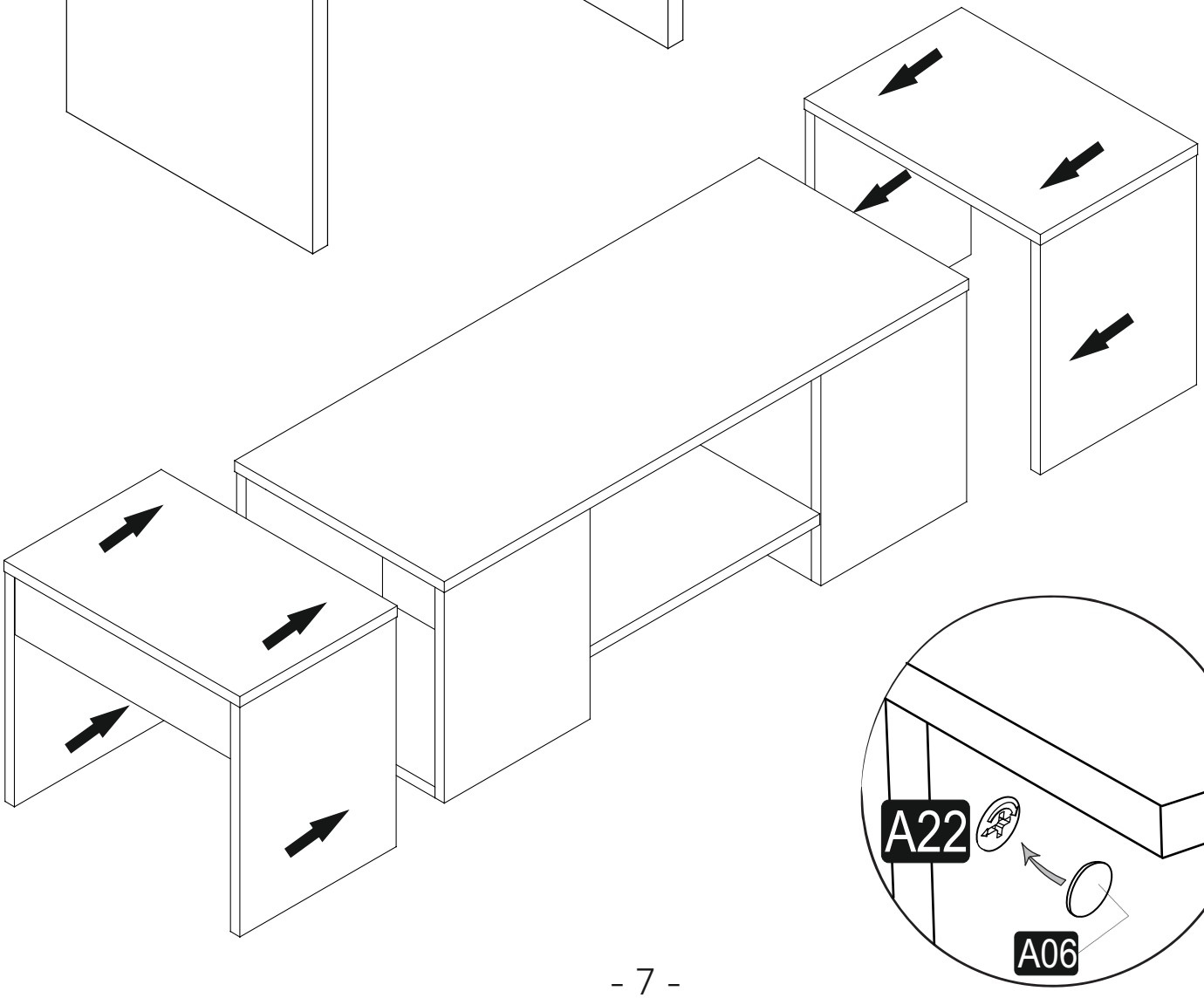
8