Assembly Instructions

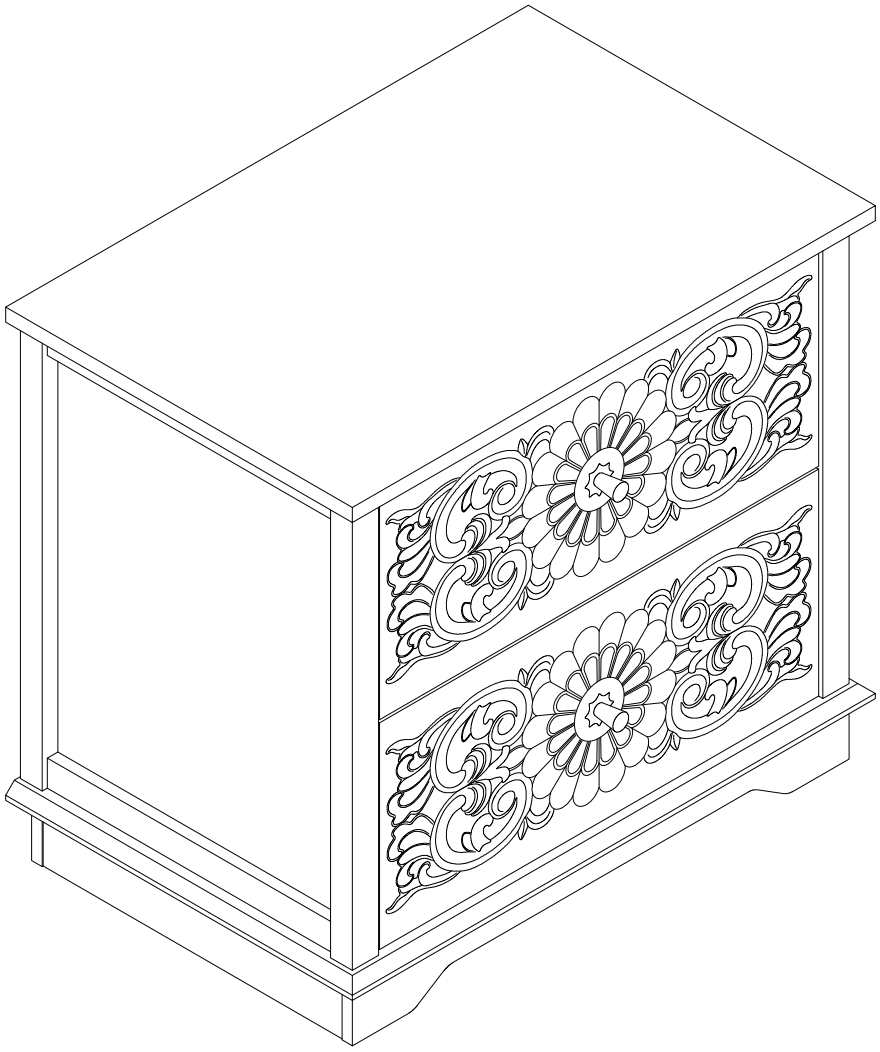

⚠	“Please check all parts and hardware against the list before assembly. If any parts are missing or damaged, please contact us immediately.”

Before Assembly

1. Assembly requires two or more people to complete.
2. Using power tools will make the installation finish faster.

Tips Before Your Start:

- Remove all wrapping material, including staples & packing straps before you start to assemble.
- DO NOT tighten all screws and bolts until the assembly is completely assembled.
- Keep all hardware parts out of reach of children.

QUICKFIT

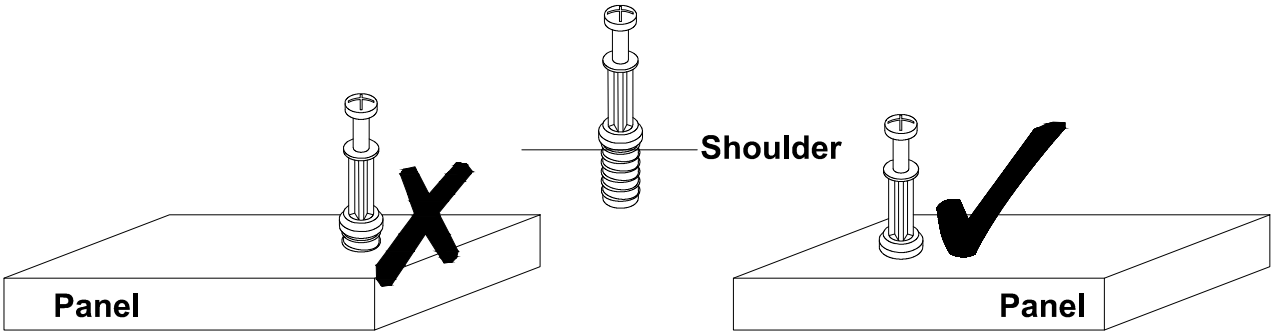

Tighten quickfit until shoulder is flush with panel. Do not overtighten or undertighten.

CAM LOCK

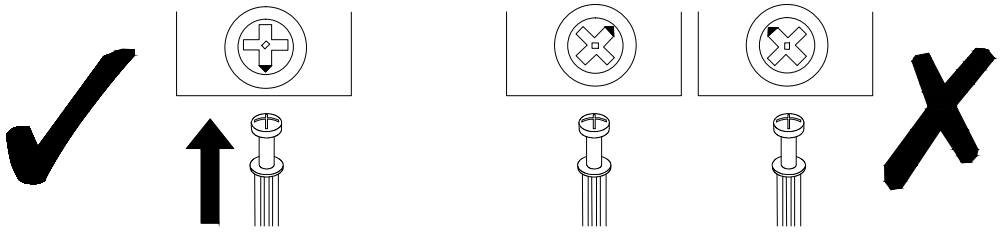

When fitting a cam lock, ensure the starting position is correct before inserting the connecting QUI CKFIT

"Ensure the arrow on the Cam Lock (B) is pointing towards the hole for the Cam Lock Dowel (A) before inserting."

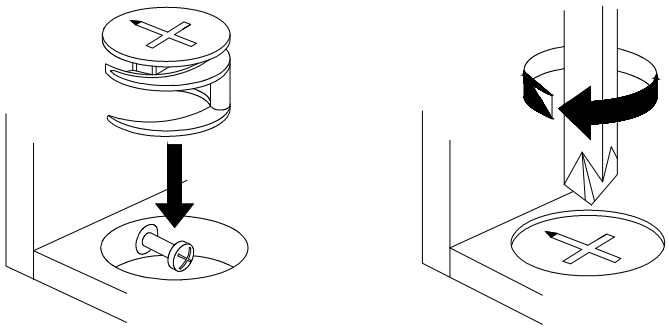

Turn cam lock clockwise to tighten.

Product structure

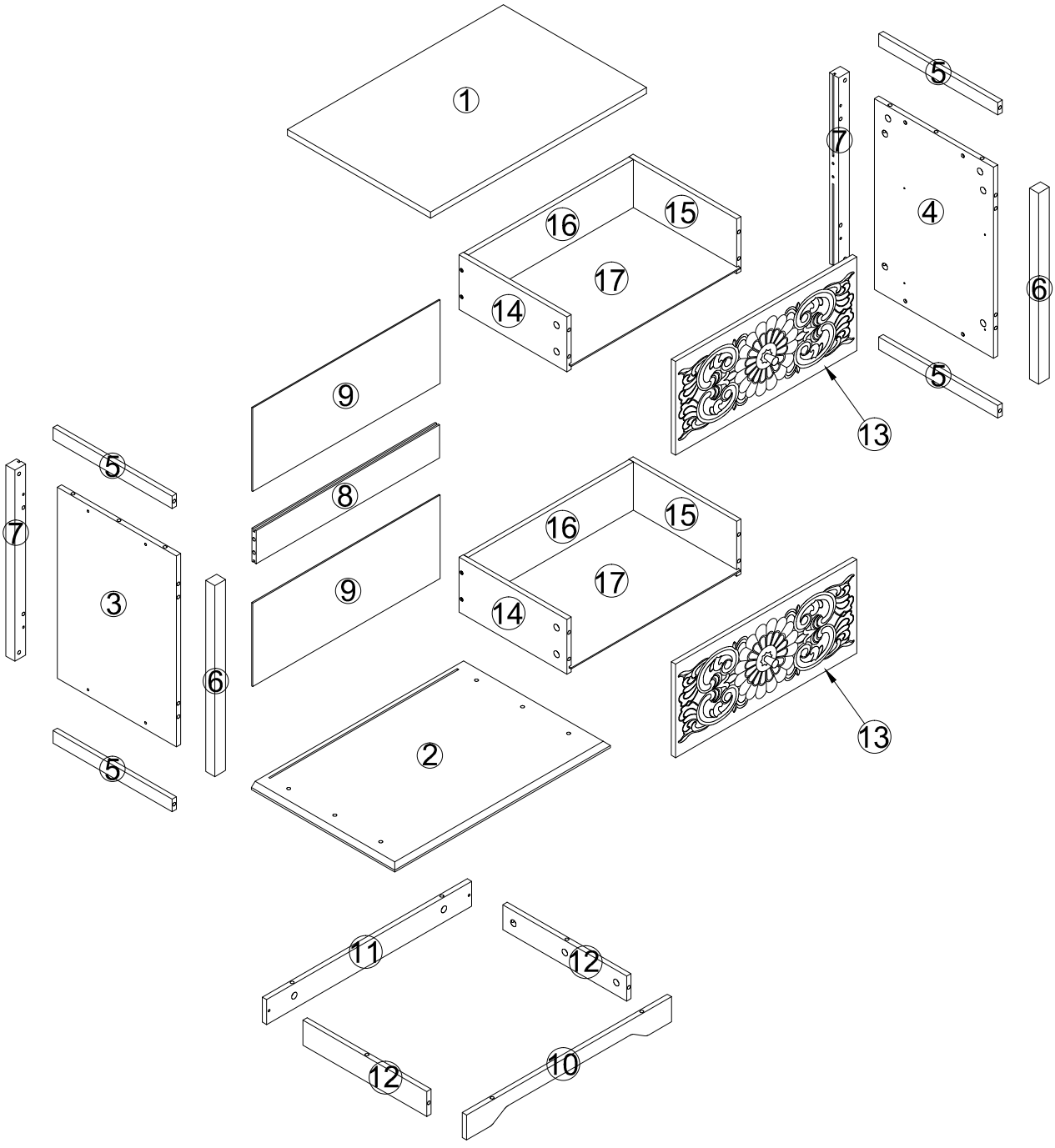

⚠	“Assemble on a soft surface, such as a carpet or the original packaging box, to avoid scratches to the panels.”

Part List

“Please check all parts and hardware against the list before assembly. If any parts are missing or damaged, please contact us immediately.”

No. A Quantity:34 Pcs Cam Lock Dowel 8*28mm 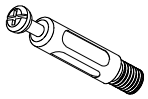	No. B Quantity:34 Pcs Cam φ15 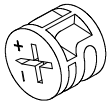	No. C Quantity:34 Pcs Sticker Ø20 	No. D Quantity:20 Pcs Dowel 8*30mm 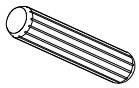
No. E Quantity:2 Sets Ordinary bottom-dragging rail 12" 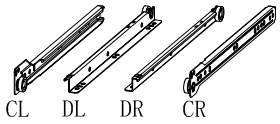	No. F Quantity:16 Pcs Screw M3.5*12mm 	No. G Quantity:8 Pcs Screw M4*20mm 	No. H Quantity:8 Pcs Screw M4*30mm 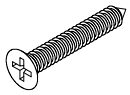
No. I Quantity:4 Pcs Foot Pad Ø12 	No. J Quantity:2 Pcs Handle Φ20*23mm 	No. K Quantity:2 Pcs Screw M4*20mm 	No. L Quantity:4 Pcs Screw M6*40mm 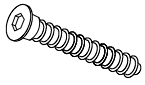
No. M Quantity:1 Pc Allen Key 4# 	No. N Quantity:8 Sets Plastic Wedge 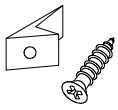	No. O Quantity:1 Sets Anti-falling Parts 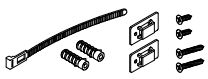	

STEP 1

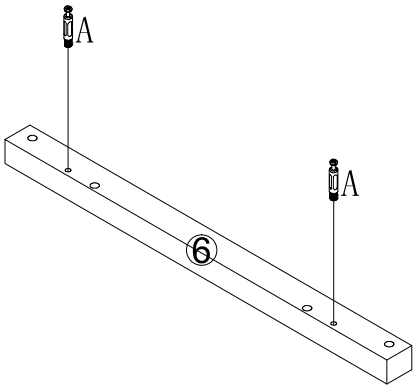

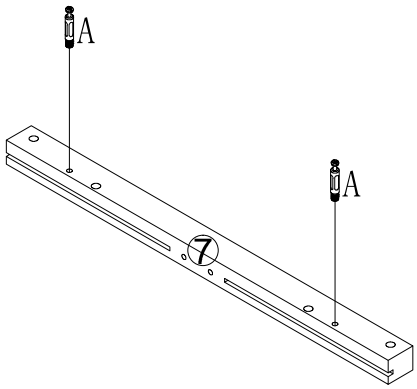

No. A
Quantity: 8 Pcs
8*28 mm



×2

STEP 2

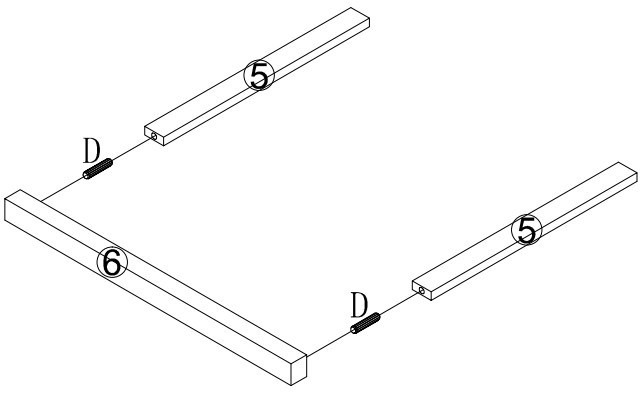

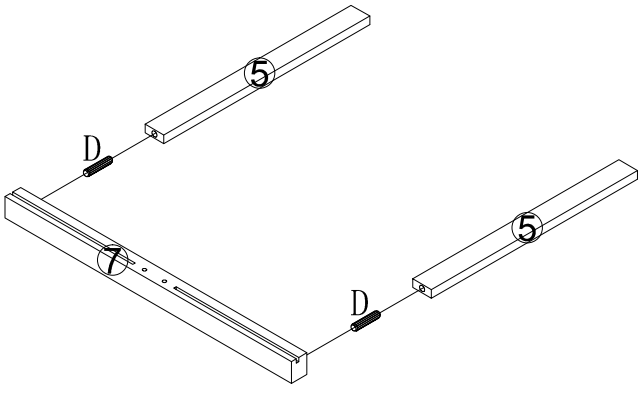

No. D
Quantity: 4 Pcs
8*30mm

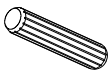

STEP 3

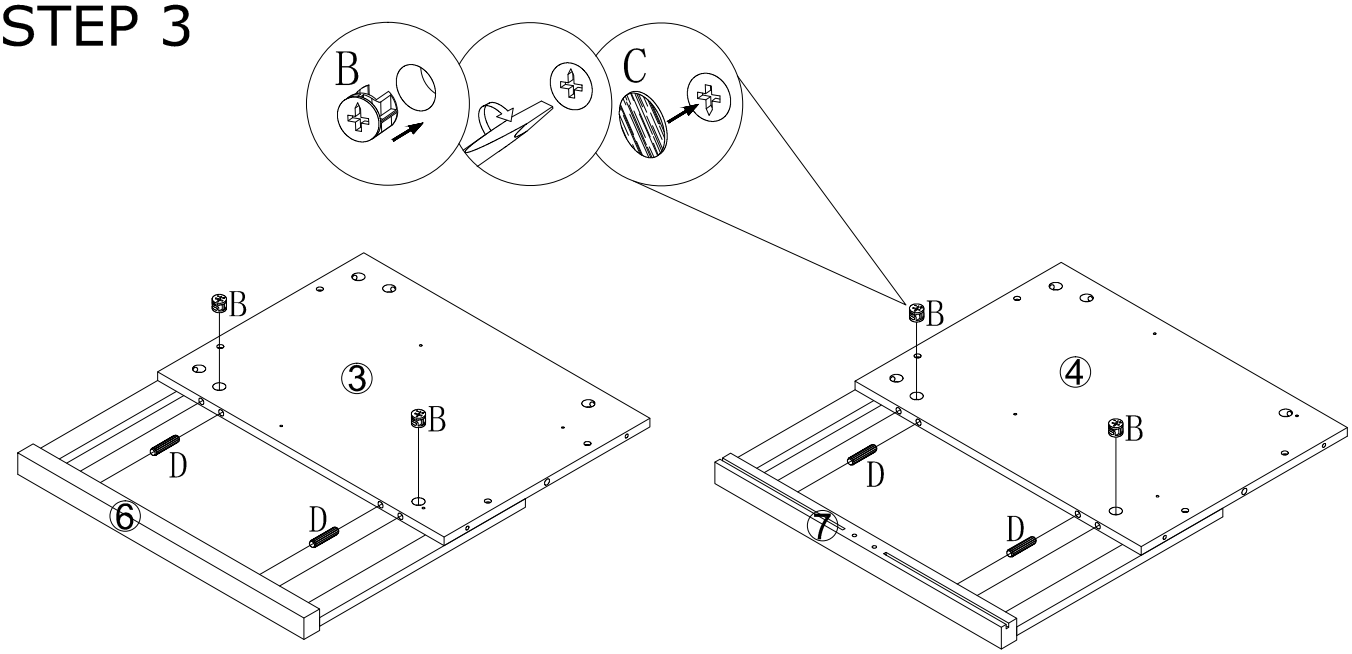

No. B	No. C	No. D
Quantity: 4 Pcs	Quantity: 4 Pcs	Quantity: 4 Pcs
Ø15	Ø20	8*30mm
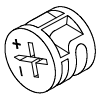		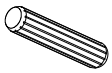

STEP 4

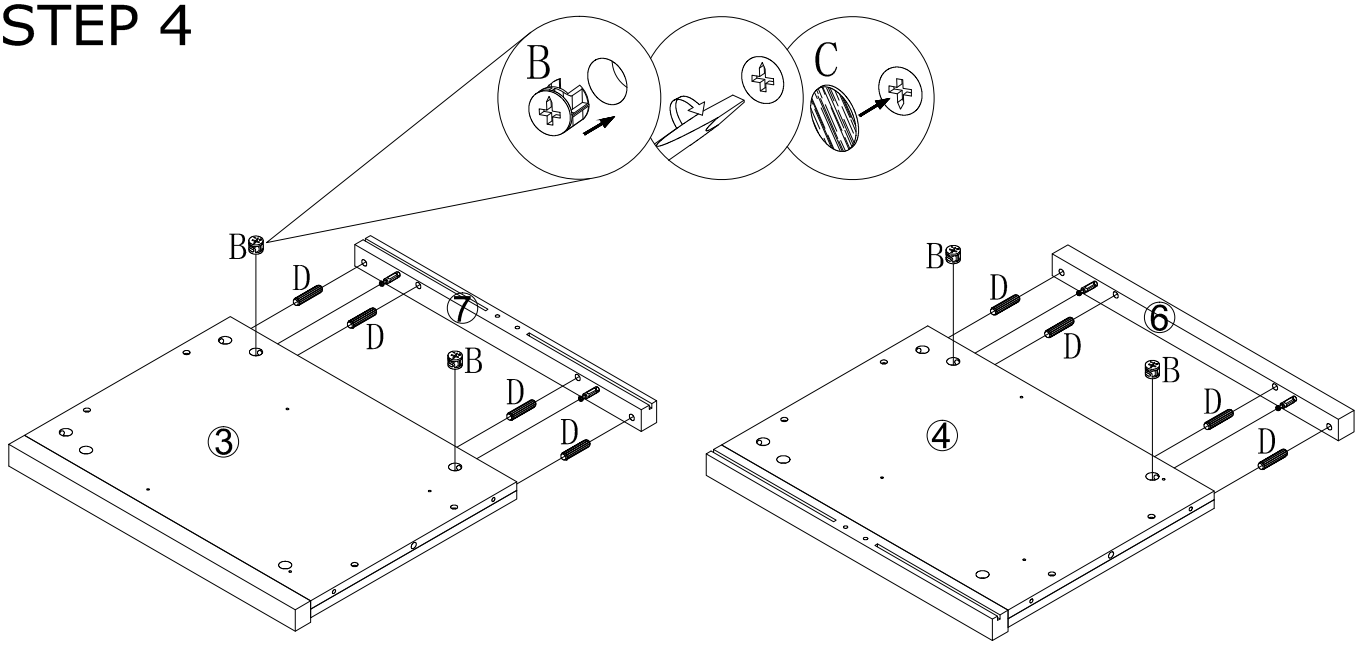

No. B	No. C	No. D
Quantity: 4 Pcs	Quantity: 4 Pcs	Quantity: 8 Pcs
Ø15	Ø20	8*30mm
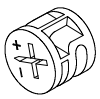		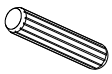

STEP 5

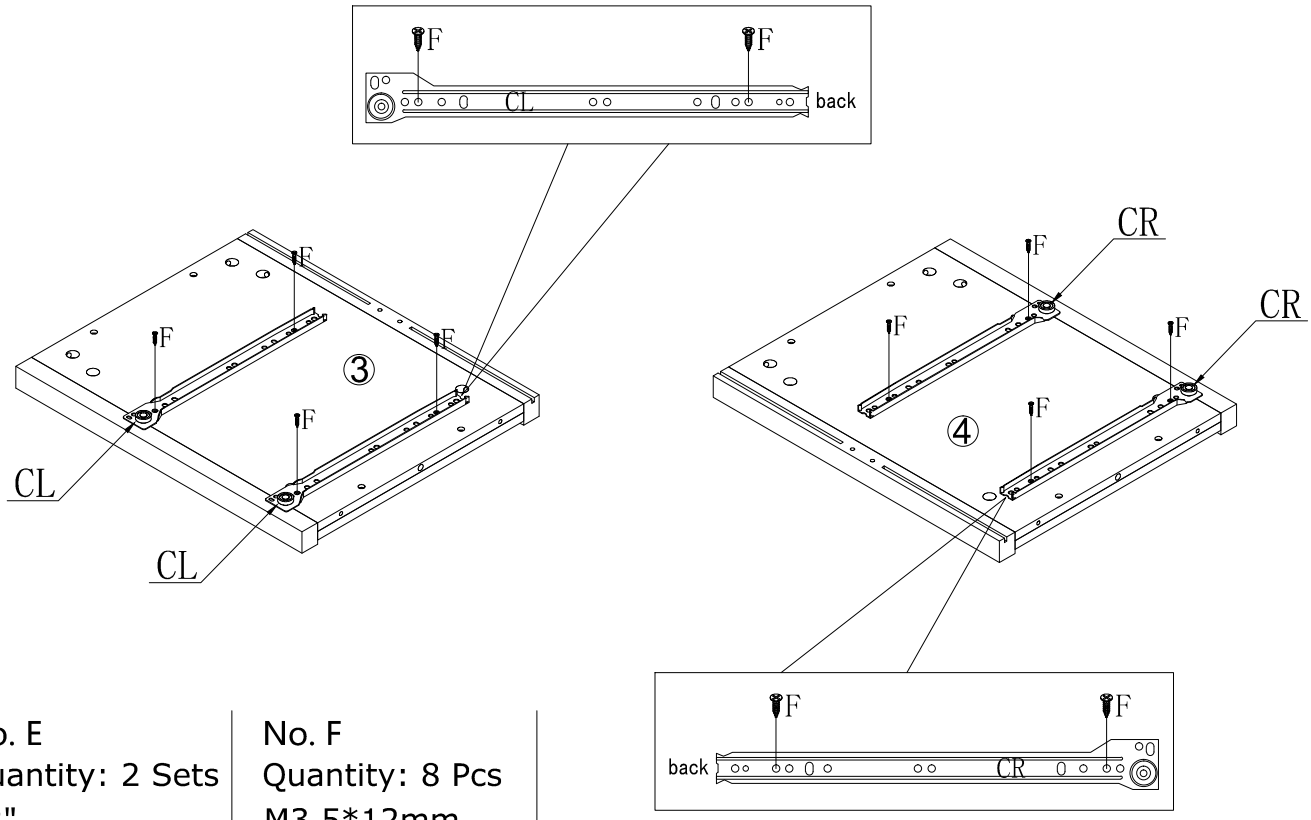

No. E
Quantity: 2 Sets
12"

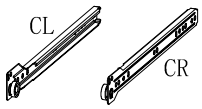

No. F
Quantity: 8 Pcs
M3.5*12mm



STEP 6

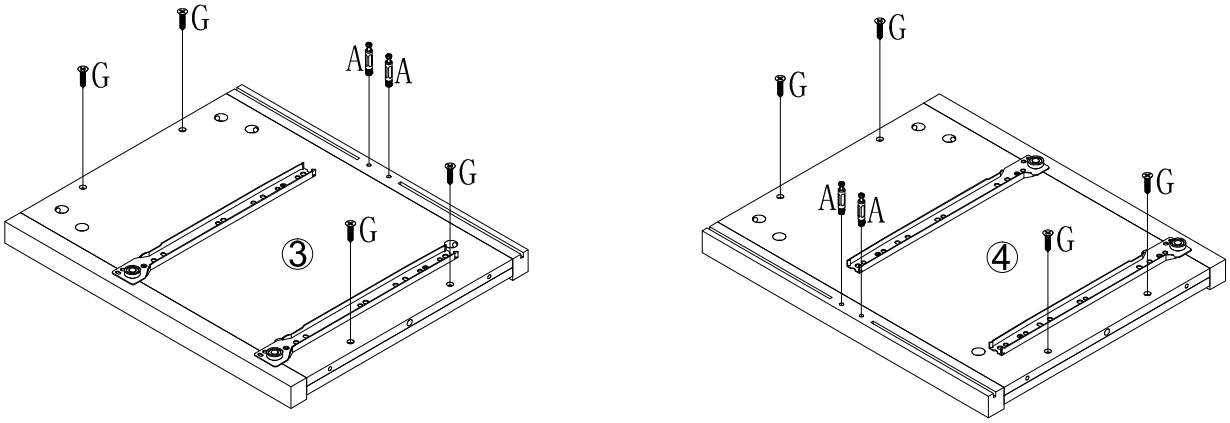

No. A
Quantity: 4 Pcs
8*28 mm

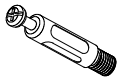

No. G
Quantity: 8 Pcs
M4*20mm



STEP 7

No. B
Quantity: 4 Pcs
Ø15

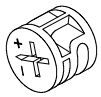

No. C
Quantity: 4 Pcs
Ø20



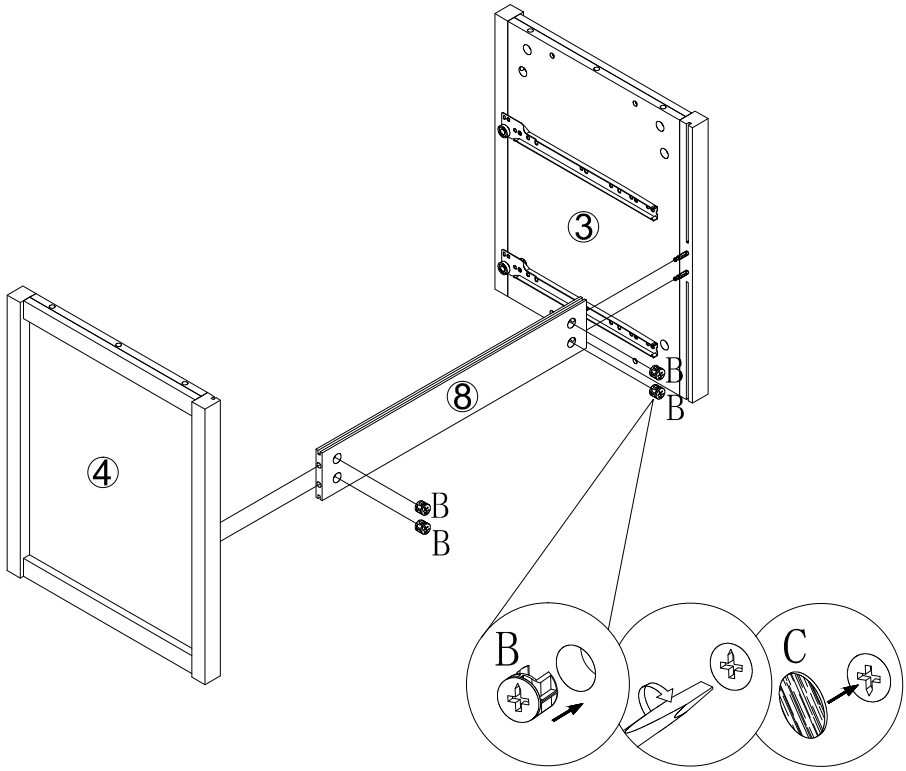

STEP 8

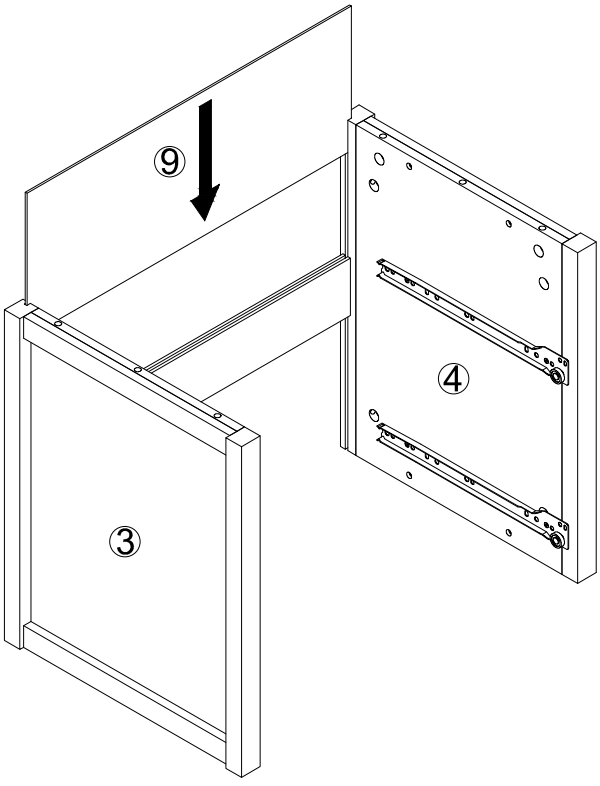

STEP 9

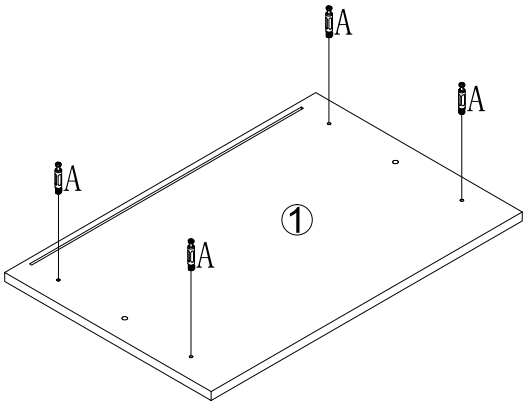

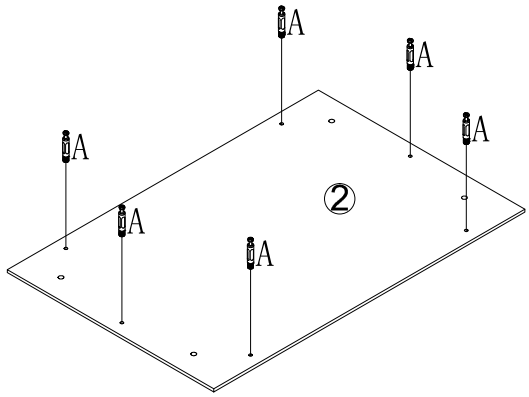

No. A
Quantity: 10 Pcs
8*28 mm



STEP 10

No. B
Quantity: 4 Pcs
Ø15

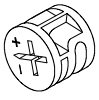

No. C
Quantity: 4 Pcs
Ø20



No. D
Quantity: 2 Pcs
8*30mm

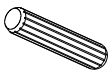

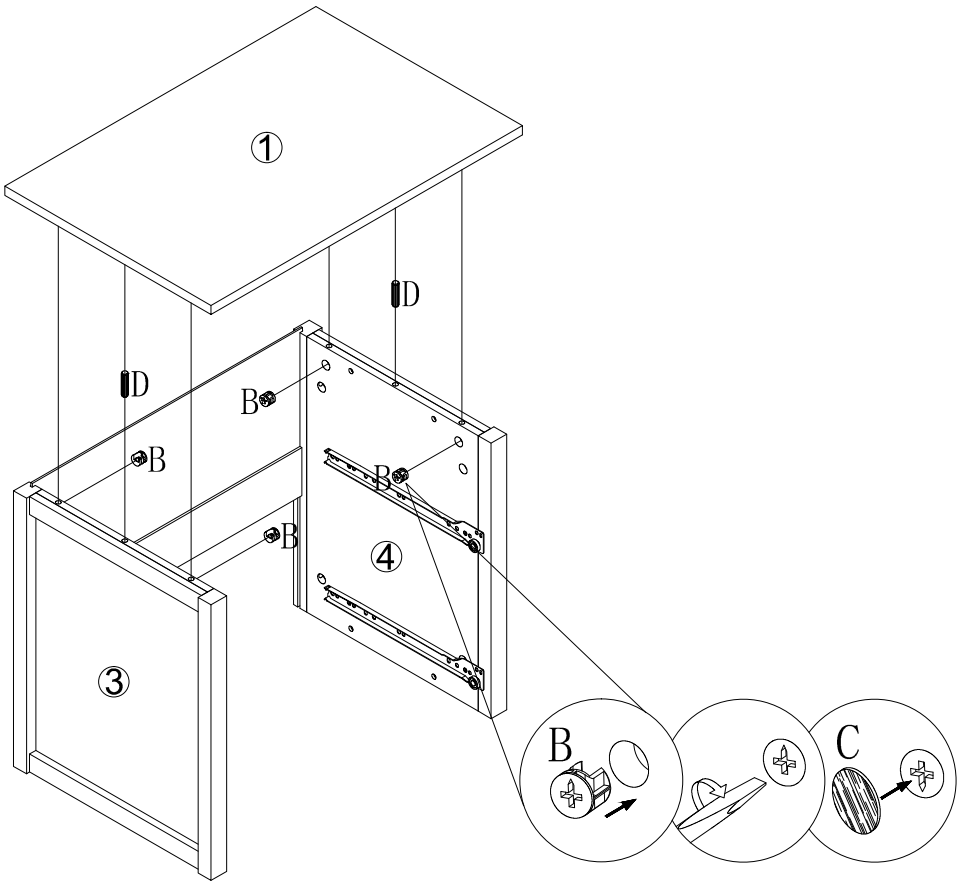

STEP 11

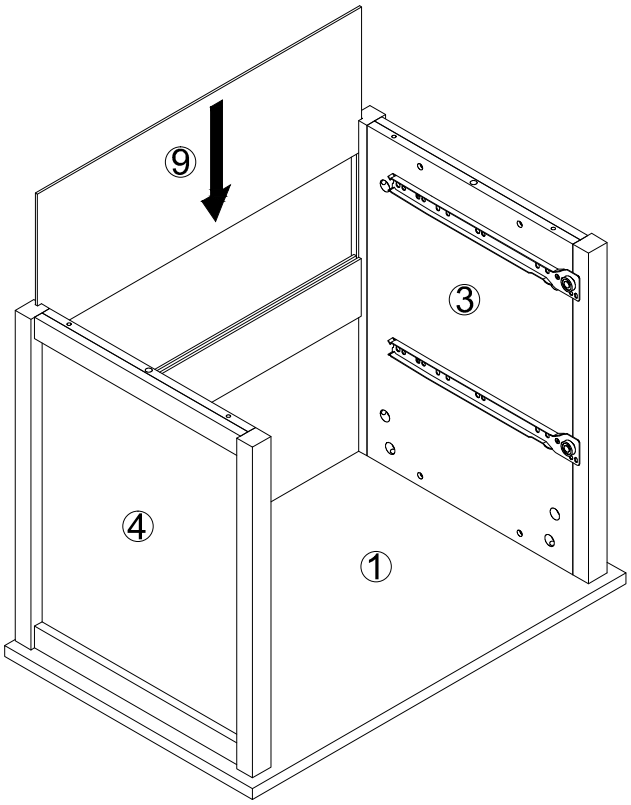

STEP 12

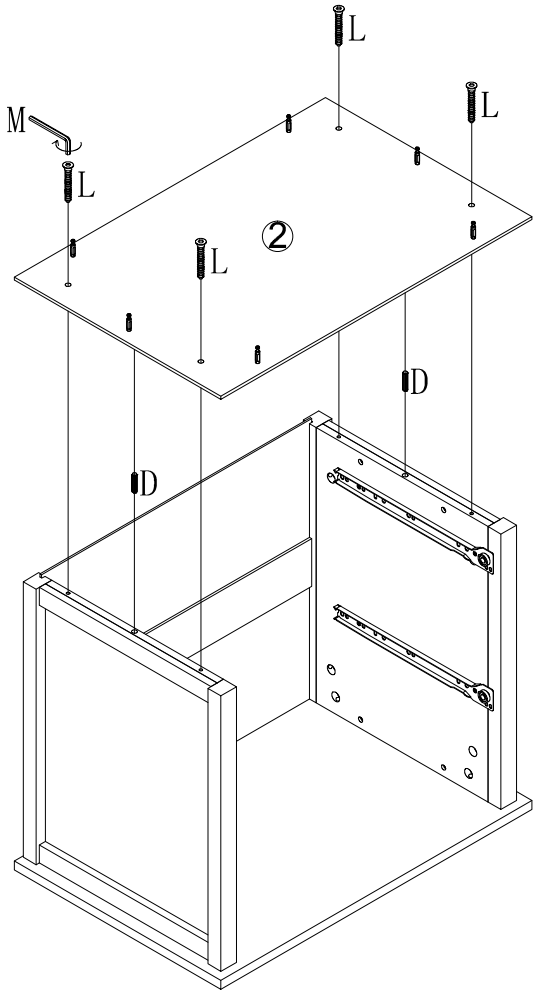

No. D
Quantity: 2 Pcs
8*30mm

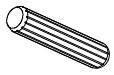

No. L
Quantity: 4 Pcs
M6*40mm



No. M
Quantity: 1 Pc
4#

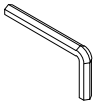

STEP 13

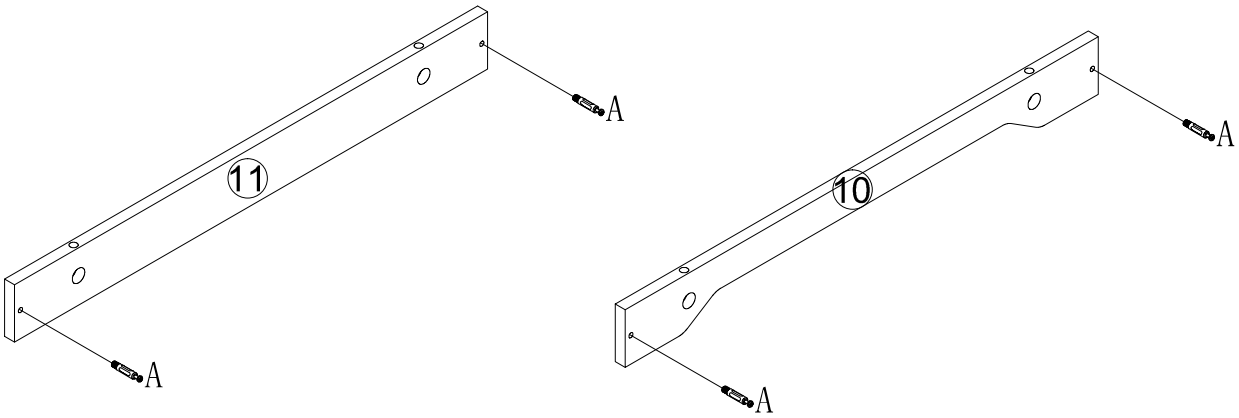

No. A
Quantity: 4 Pcs
8*28 mm

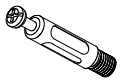

STEP 14

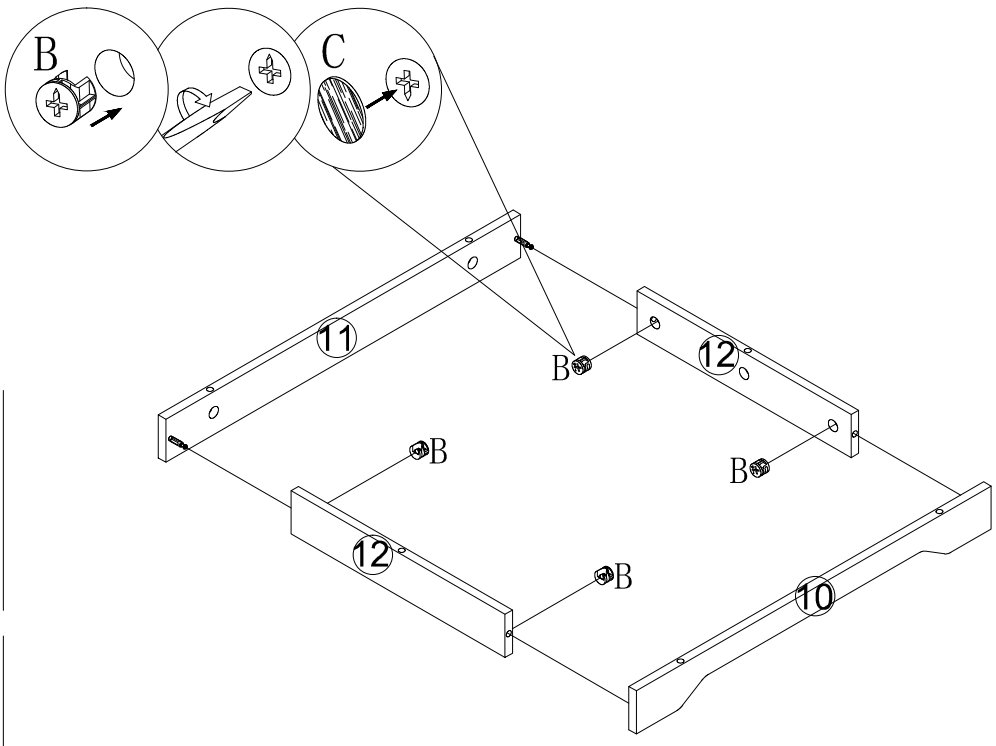

No. B
Quantity: 4 Pcs
Ø15



No. C
Quantity: 4 Pcs
Ø20



STEP 15

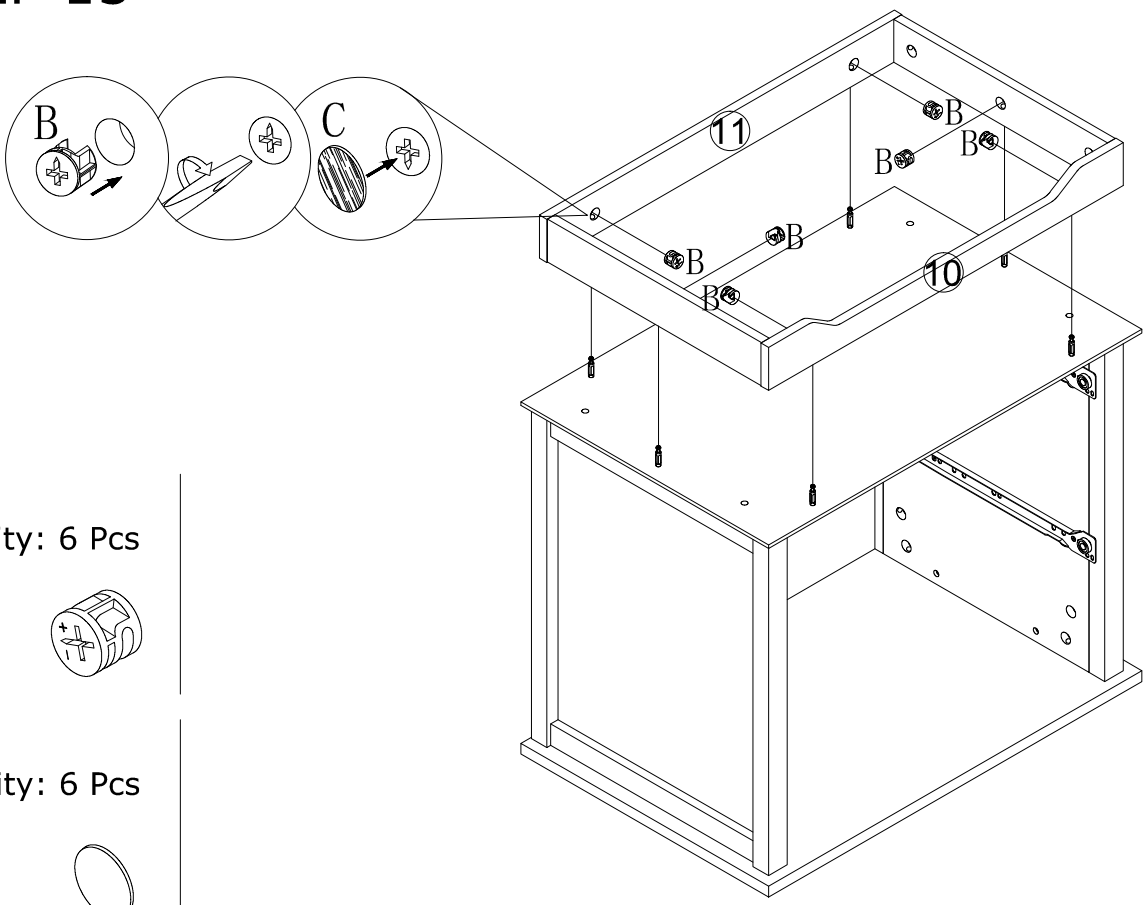

No. B
Quantity: 6 Pcs
Ø15

No. C
Quantity: 6 Pcs
Ø20

STEP 16

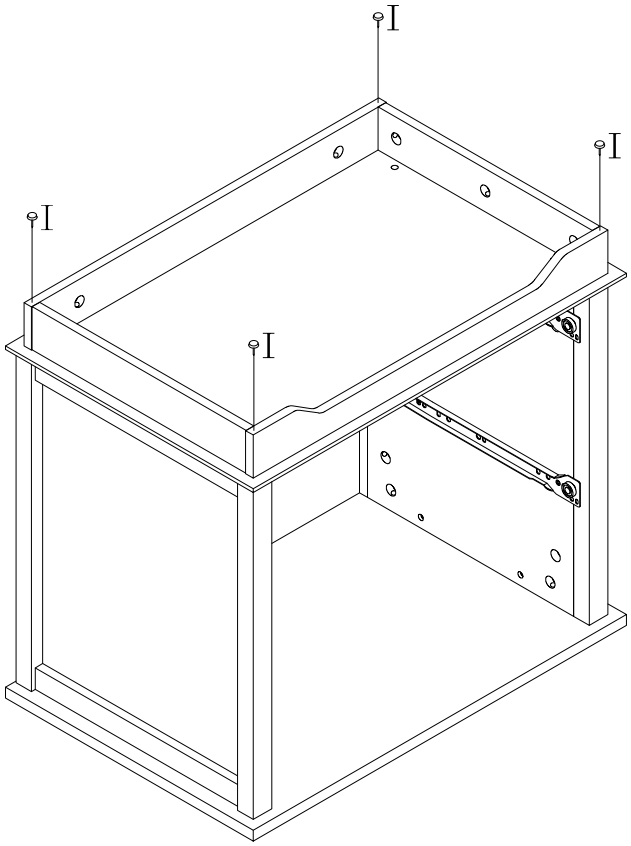

No. I
Quantity: 4 Pcs
Ø12



STEP 17

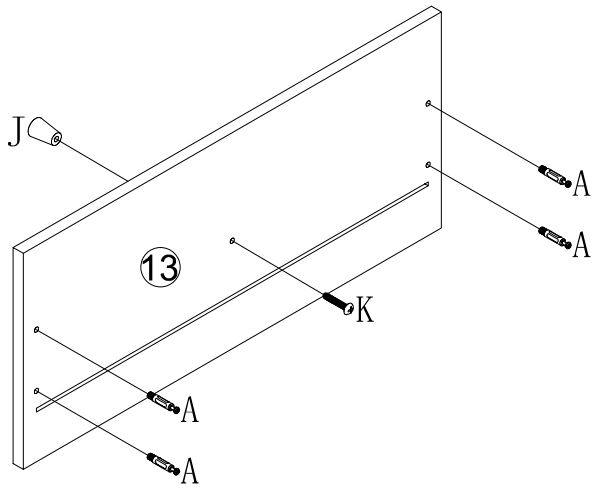

×2

No. A
Quantity: 8 Pcs
8*28 mm

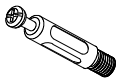

No. J
Quantity: 2 Pcs



No. K
Quantity: 2 Pcs
M4*20mm



STEP 18

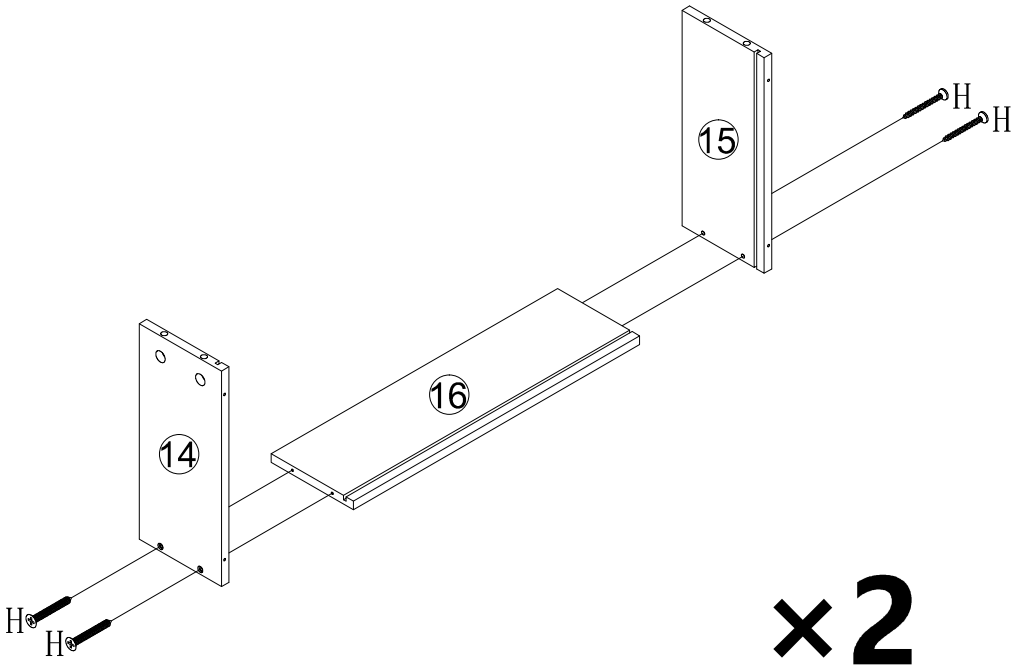

×2

No. H
Quantity: 8 Pcs
M4*30mm

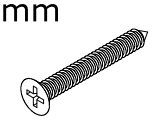

STEP 19

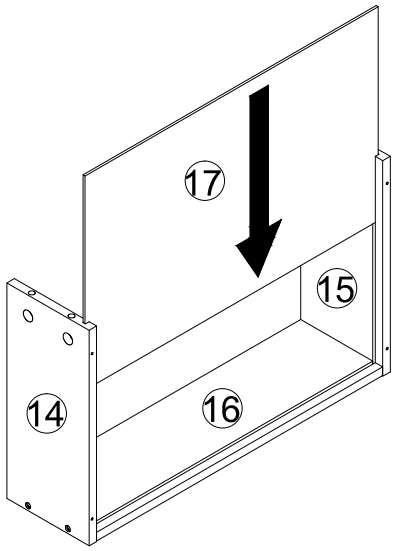

×2

STEP 20

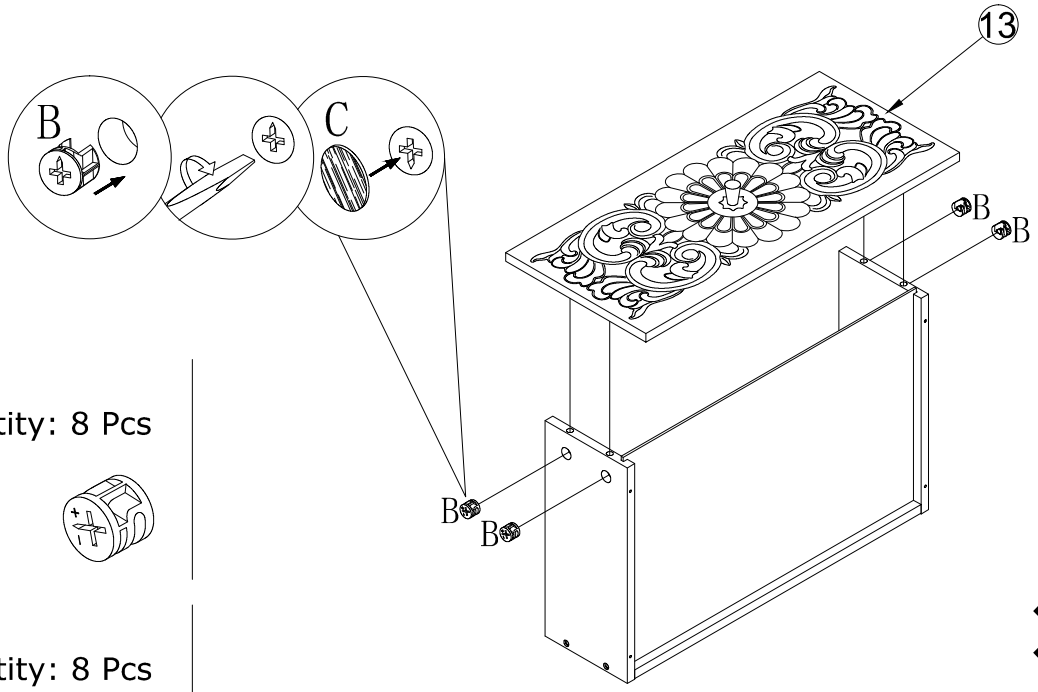

No. B
Quantity: 8 Pcs
Ø15

No. C
Quantity: 8 Pcs
Ø20



×2

STEP 21

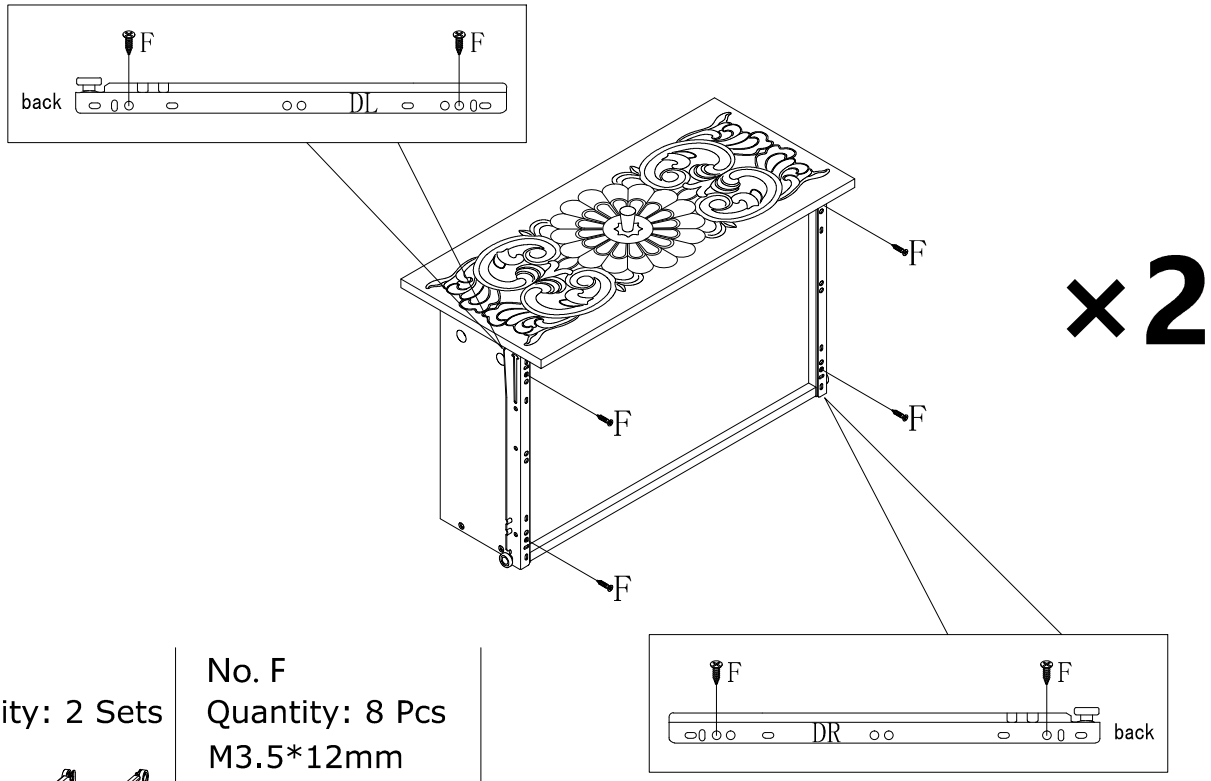

×2

No. E
Quantity: 2 Sets
12"

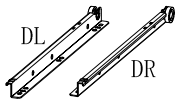

No. F
Quantity: 8 Pcs
M3.5*12mm

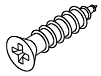

STEP 22

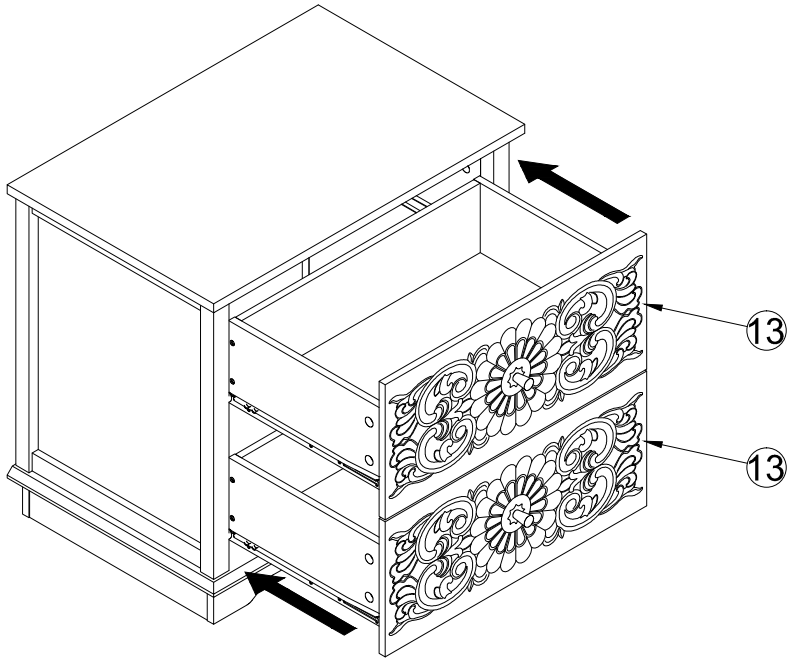

STEP 23

"DO NOT skip Step 23. The Plastic Wedges (N) are crucial for the stability of the cabinet."

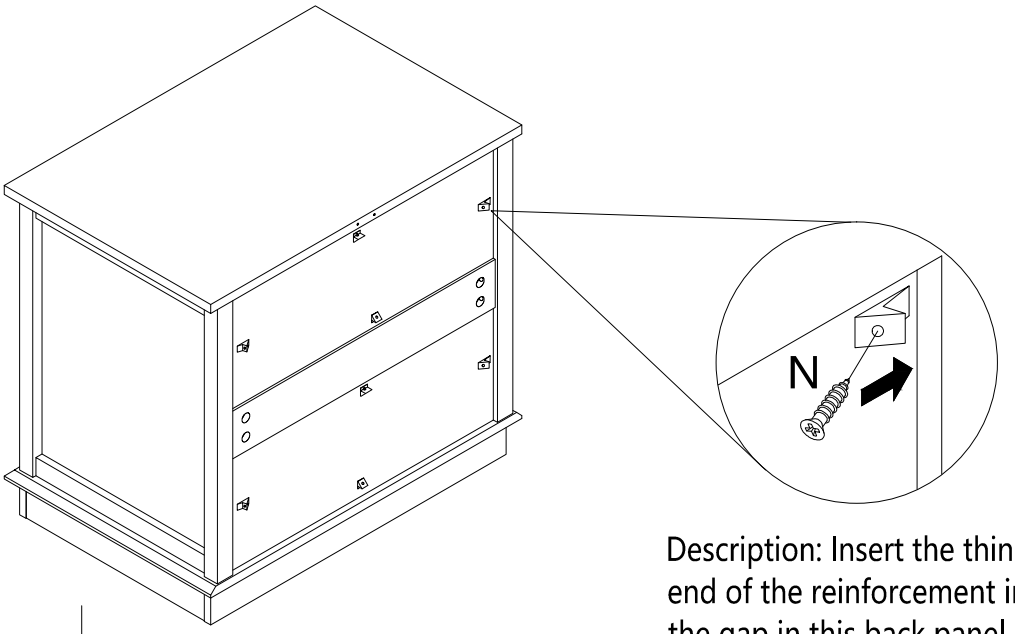

Description: Insert the thinner end of the reinforcement into the gap in this back panel, then tighten the screws. This will make the cabinet more stable.

No. N
Quantity: 8 Sets



STEP 24

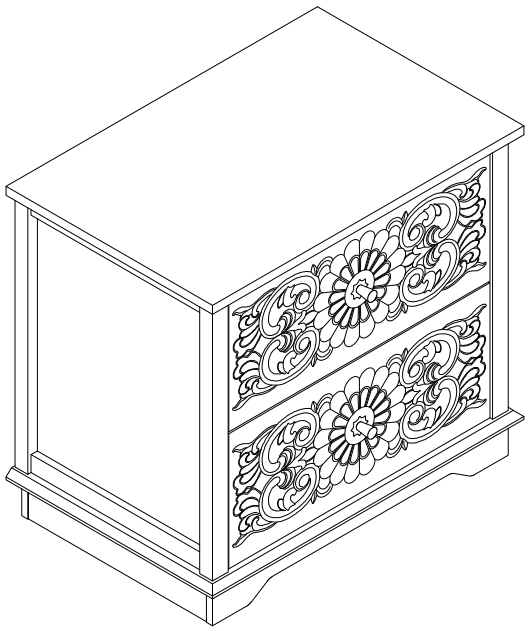

STEP 25

	WARNING: ALWAYS LIFT the cabinet when moving it. NEVER DRAG it across the floor. Dragging will cause the legs to fail and may lead to serious injury or property damage.

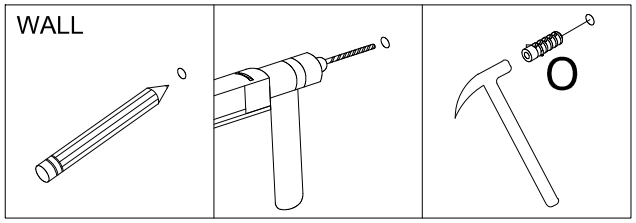

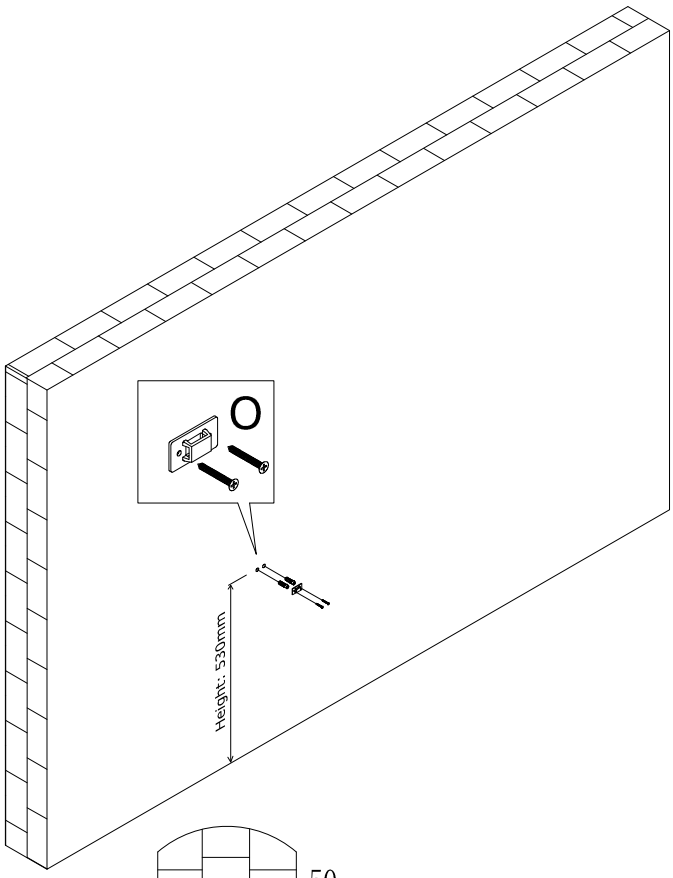

1.The customer must mark the desired mounting positions on the wall,then use their own hammer drill to drill holes into the wall surface.
2. Use a hammer to tap the one plastic expansion anchors into the wall.
3. Insert the corresponding screws into the plastic expansion anchors tocomplete the installation.

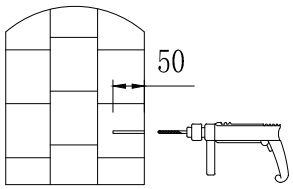

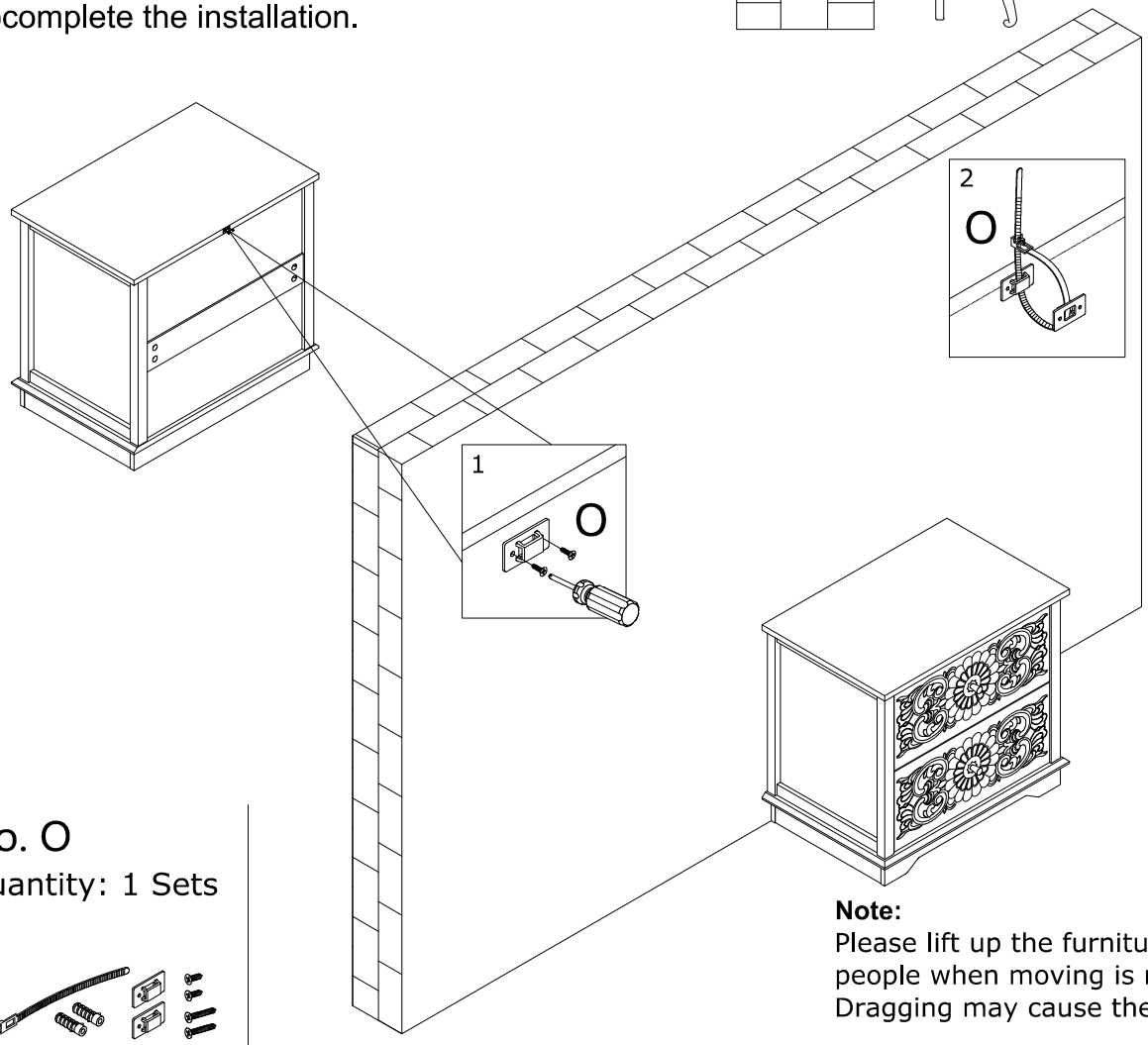

No. O
Quantity: 1 Sets

Note:
Please lift up the furniture by two people when moving is needed. Dragging may cause the legs failure.