Installation Manual

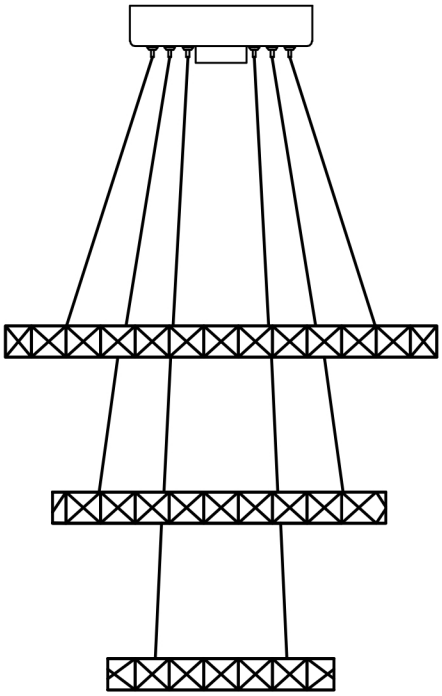

Style 1

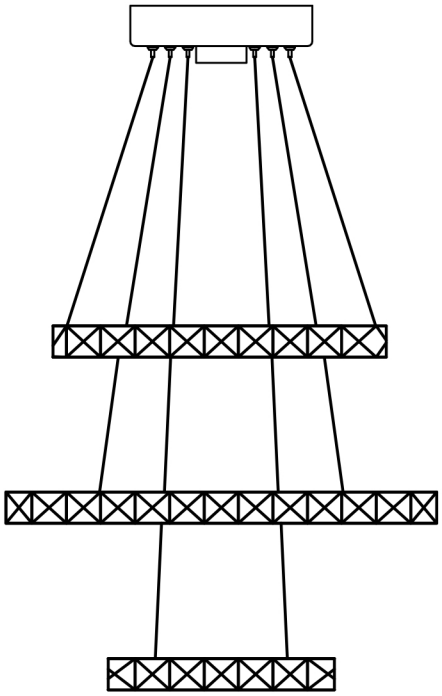

Style 2

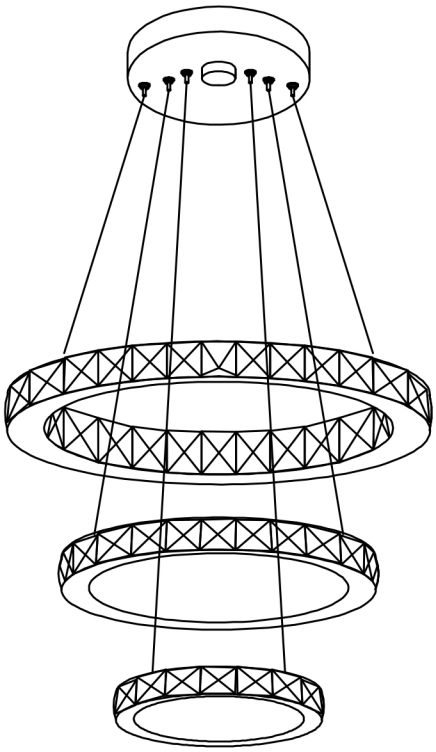

Style 3

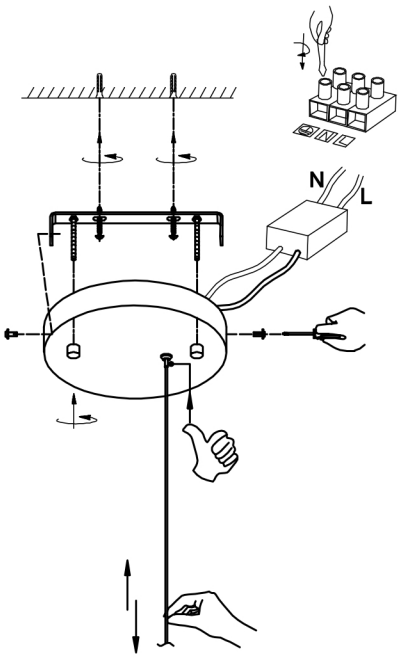

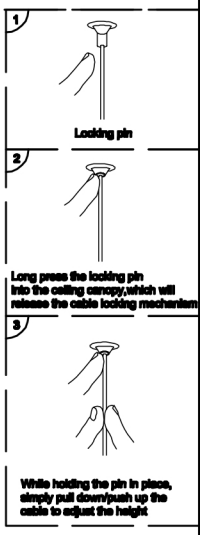

Attention : 1.Donot fit the chandelier to wet ceiling
2.Cut the power before installation
3.Fix the screws and lamps tightly