Installation steps

1

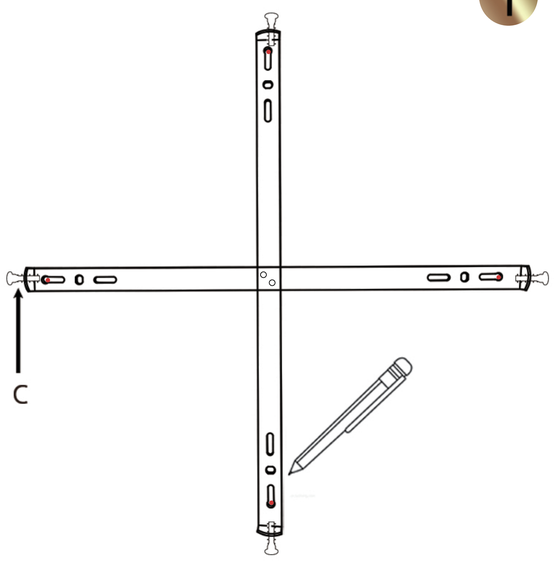

Mark the location of the hole.

2

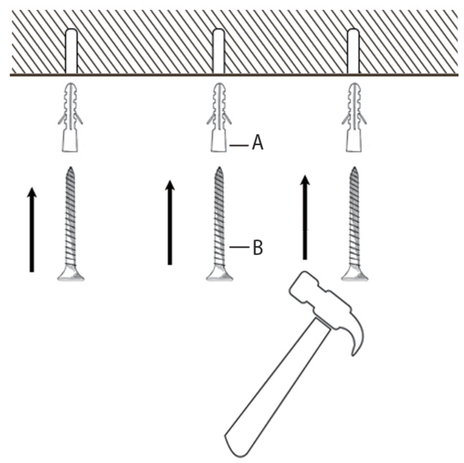

Fasten the screw "B"on the wall with "A"

3

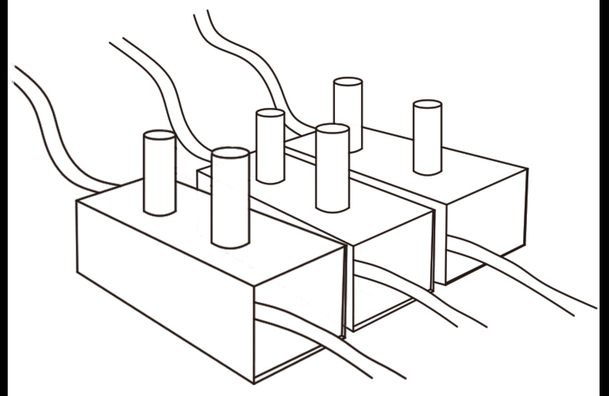

Connecting the lamp cord to the Power cord for home use.

4

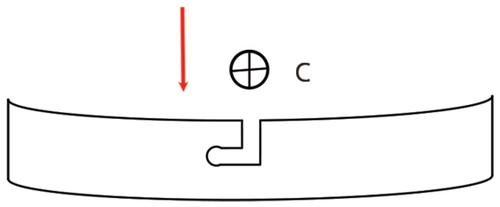

Use long suspension plates snap onto the ceiling panel.

5

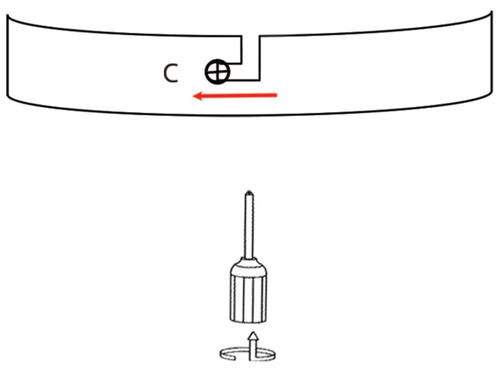

Screw "C" on the long tighten the suspension plate.

6

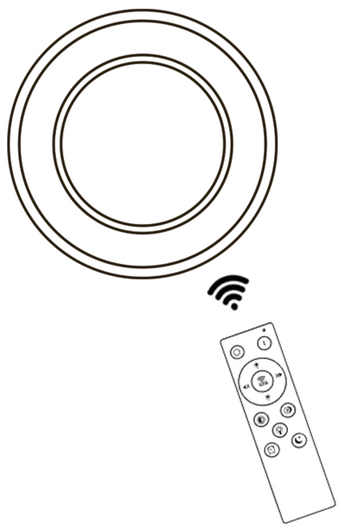

Test after completing the Installing the light source.

Remote control analysis

❶		Indicator light
❷		Turn on the lights
❸		Turn off the lights
❹		Brightness adjustment "+"
❺	K	Color temperature adjustment "-"
❻	SETUP	Code pairing button
❼	K	Color temperature adjustment "+"
❽		Brightness adjustment "-"
❾		Color temperature conversion
❿		Half light
⓫		Auxiliary light
⓬		Night light function
⓭		Delay off lights 30 minutes

Important–Code Pairing

1. Use two No. 7 batteries;

2. Code alignment method:

Method 1:within 5 seconds after the lamp is powered on, long press "SETUP " ,the lamp flashes,the code alignment is successful.

Method 2:press "SETUP " for 5 consecutive times after the lamp is powered on, the lamp flashes, the code alignment is successful.

3. Code clearance mode within 5 seconds, long press "open for 5 seconds or so, remote contro code clearance.
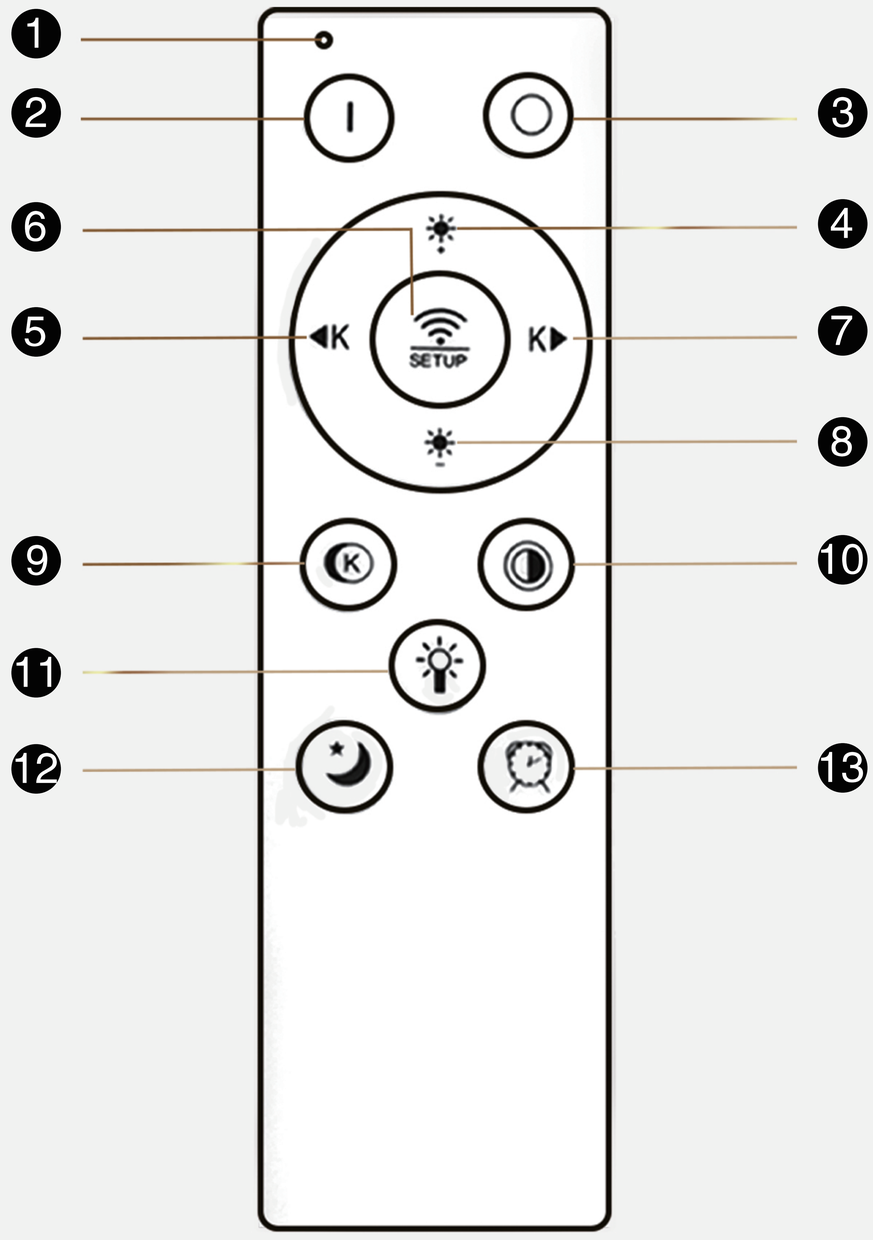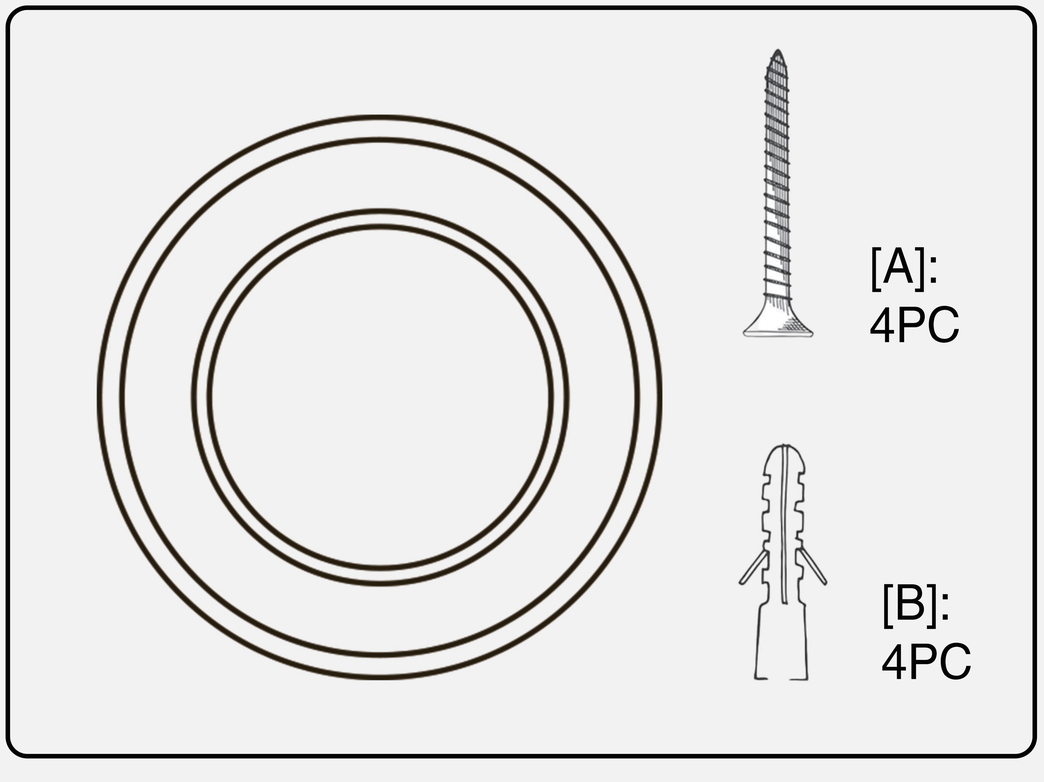
Package