Installation & Assembly

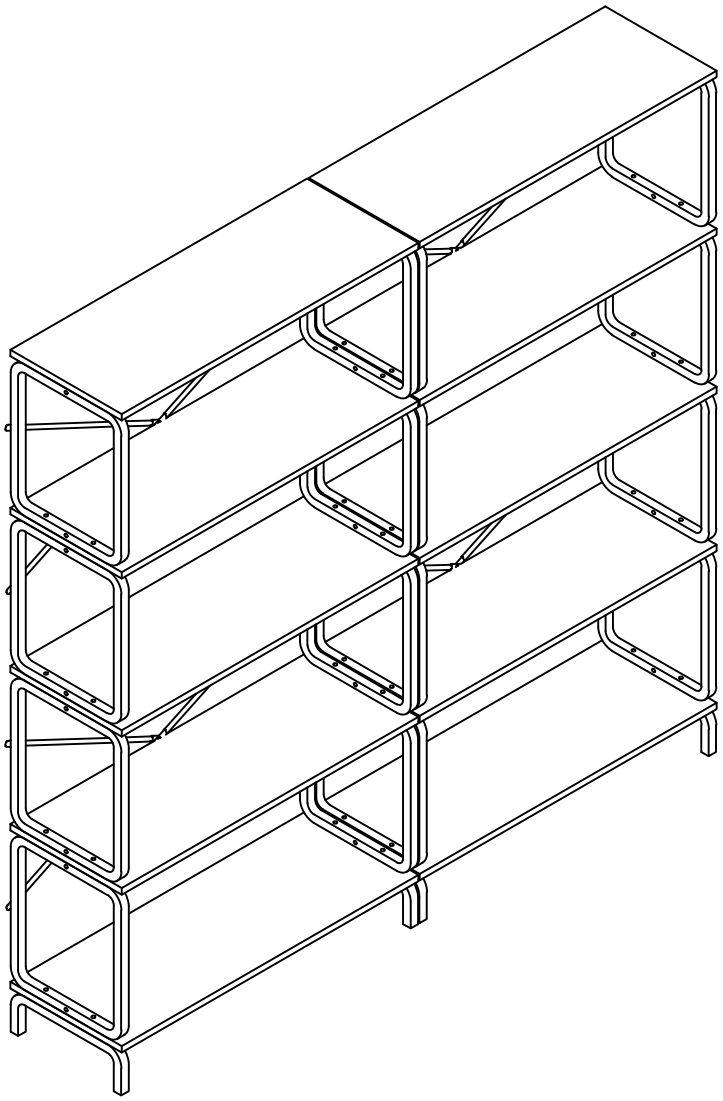

Installation of Cams and Pins

Screw the pin into the hole. To set the cams correctly, ensure that the arrow on the cam is opening to the hole of the pin it is locking, Lock the cam by turning the cam head with a screwdriver unti| it is tightened. Please do not use an electric screwdriver to assemble the unit.

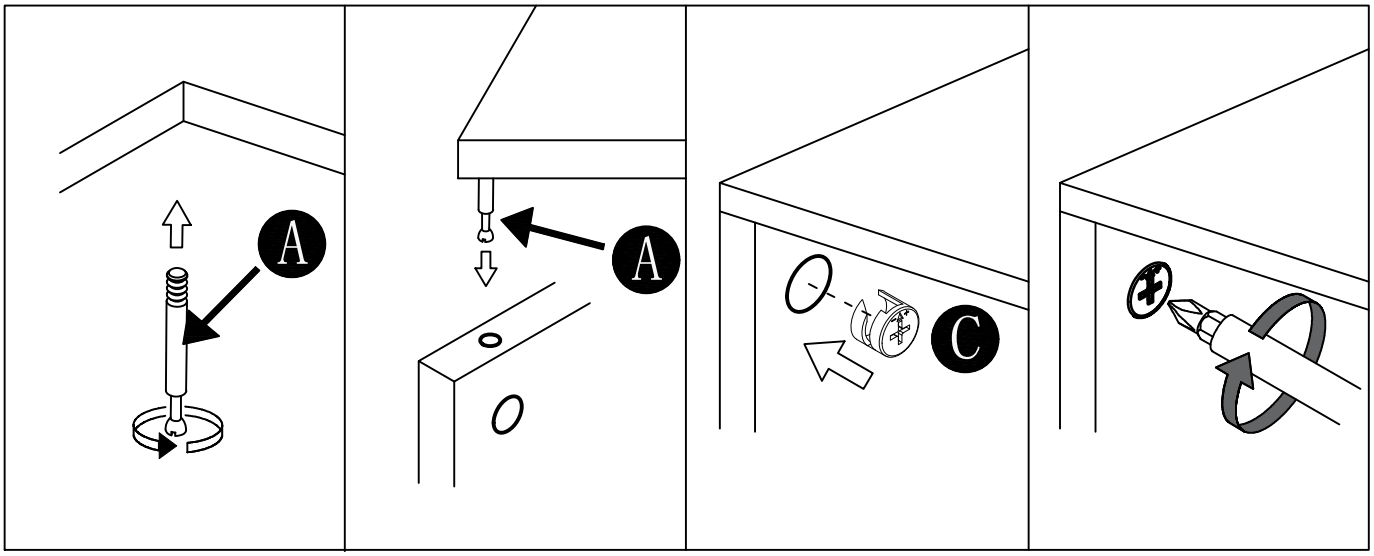

Read each step carefully before starting. It is very important that each step of instruction is performed in the correct order. If these steps are not followed in sequence, assembly difficulties will occur.

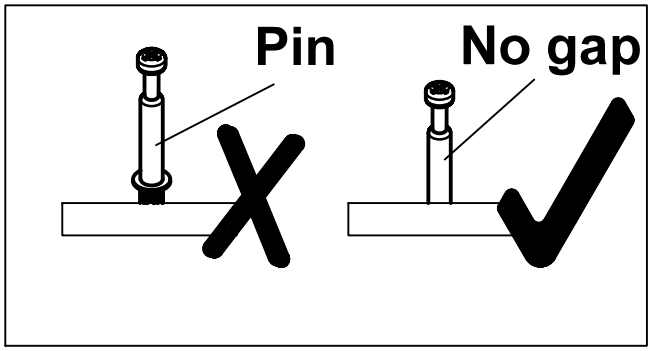

Parts & Hardware List

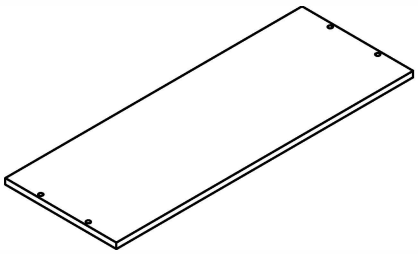 ❶ 2pcs	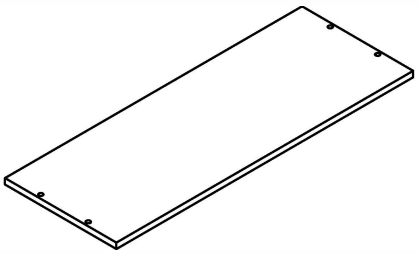 ❷ 8pcs	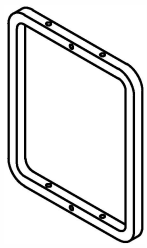 ❸16pcs
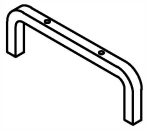 ❹ 4pcs	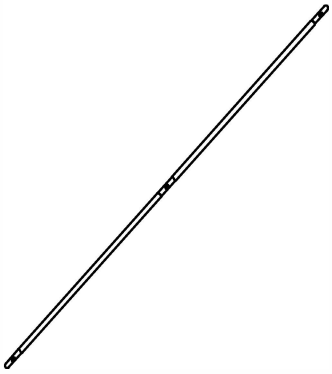 ❺ 8pcs	

Parts & Hardware List

 M6*30 F 8pcs	 M6*50 I 8pcs	 M6*60 K 32pcs	 M6*10 N 20pcs
 M6 V 44pcs	 M8 Y 8pcs	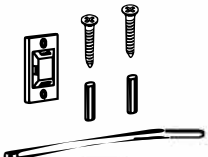 Z 2set	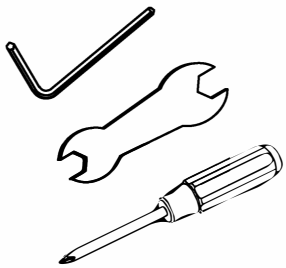

1

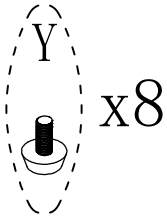

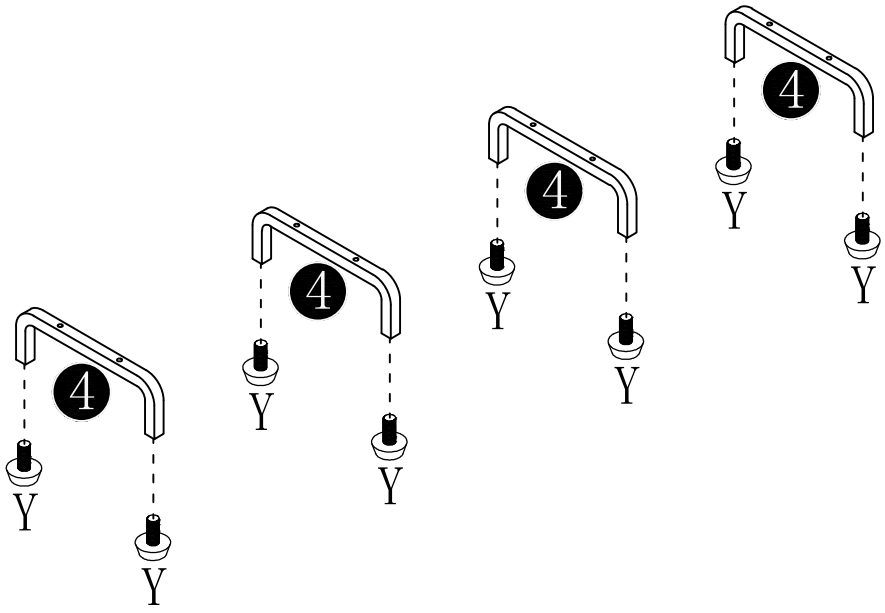

2

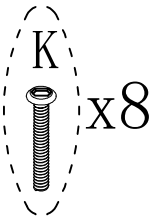

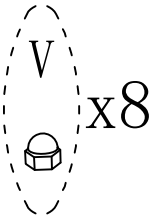

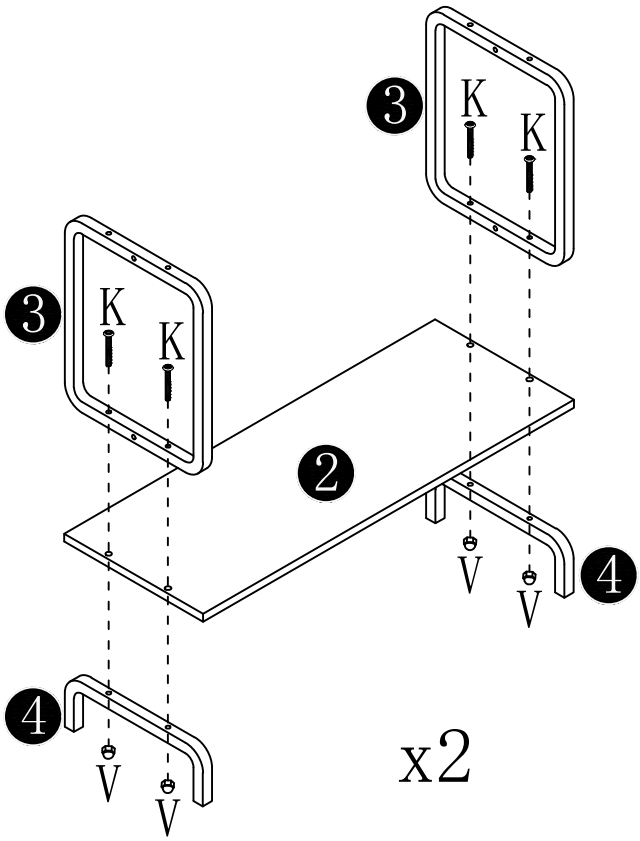

3

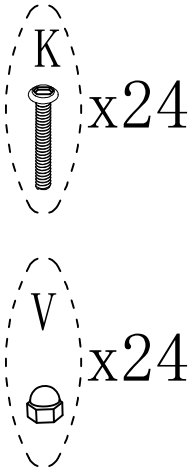

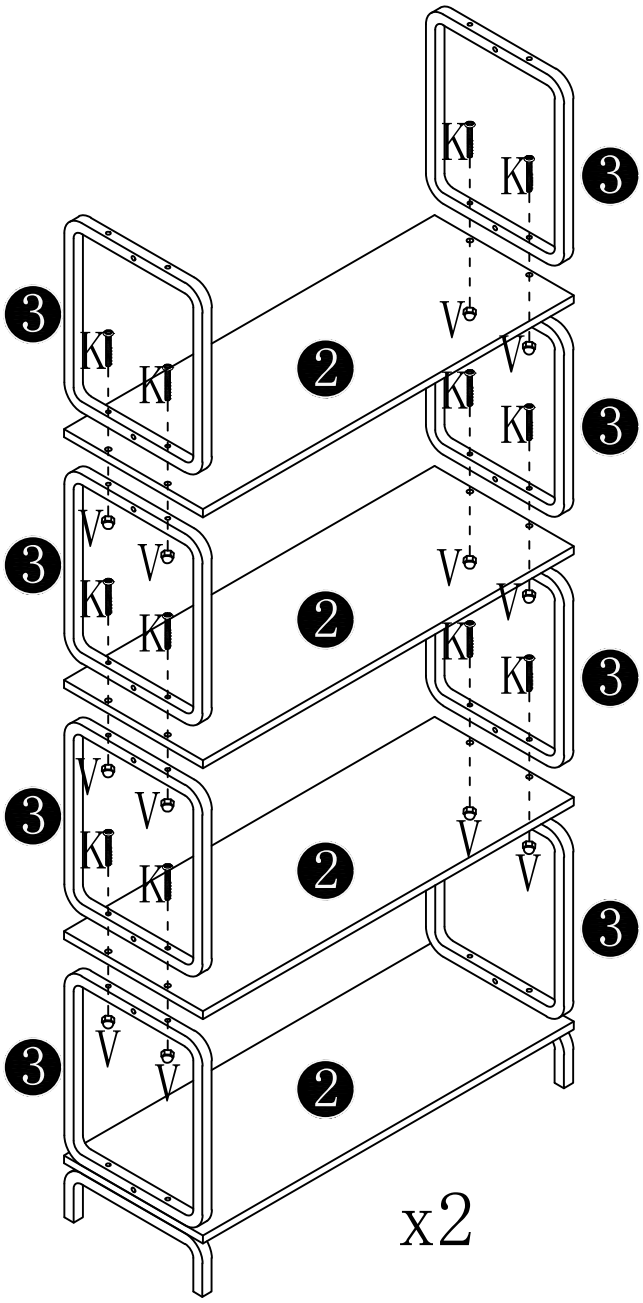

4

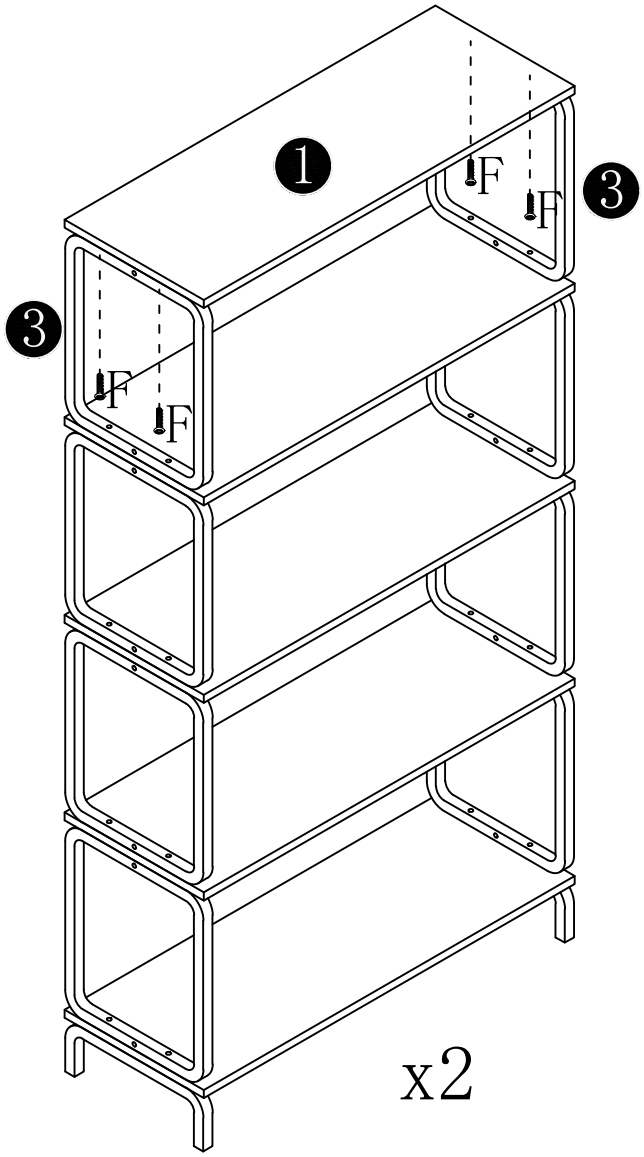

x2

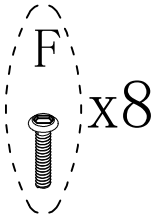

x8

5

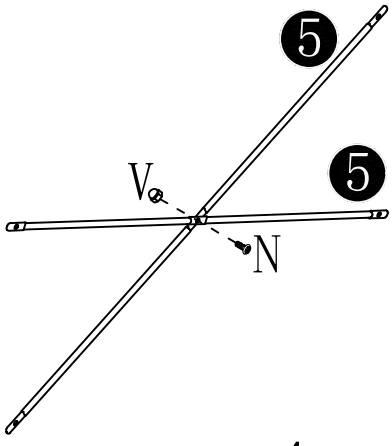

x4

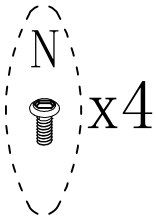

x4

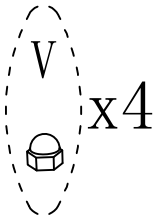

x4

6

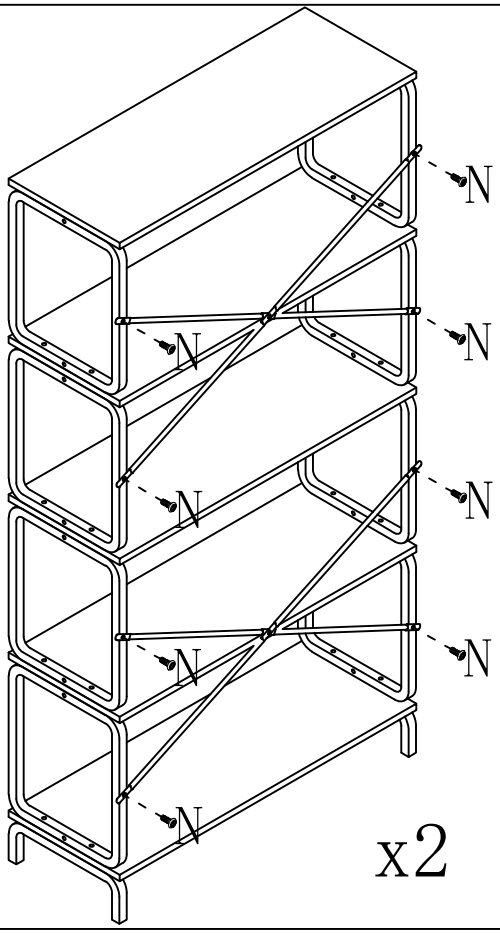

x2

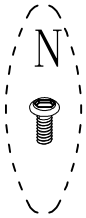

x16

7

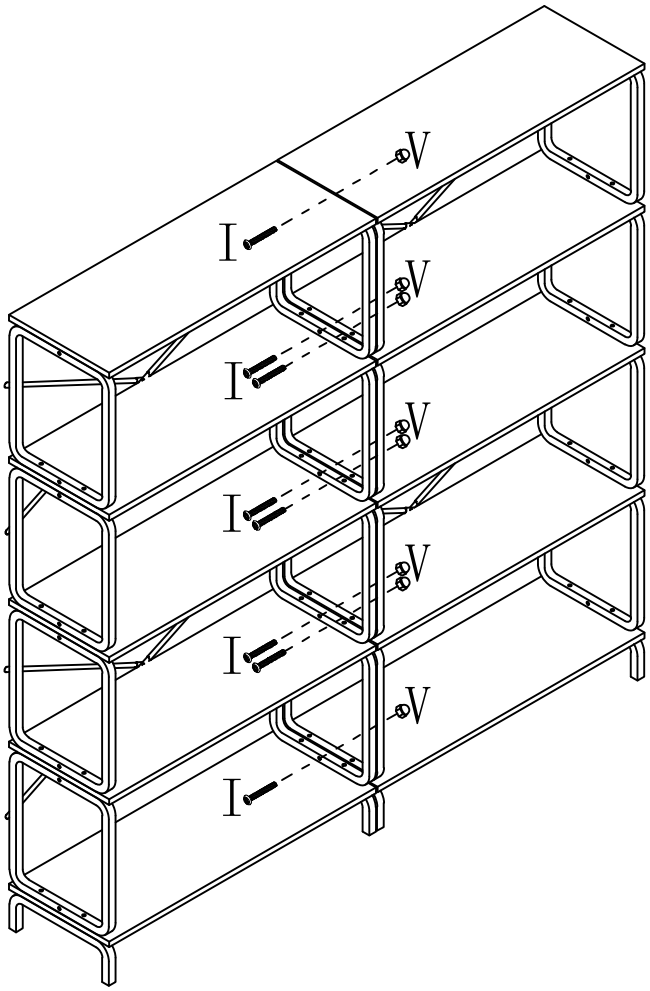

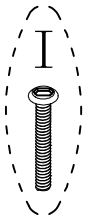

x8



x8

8

