Danze®

D511040T
D501540T

SPECIFICATIONS

FAIRMONT™ TRIM ONLY SINGLE HANDLE PRESSURE BALANCE TUB & SHOWER FAUCET

Model

D511040T (Tub & Shower trim)
D501540T (Shower only trim)

Description

- 4" 250D showerhead
- 6" brass showerarm
- Diverter on spout
- Showerhead D460026, A112.18.1M, 1.75 gpm (6.6 LPM) maximum flow rate @ 80 psi; 1.31 gpm (4.95 LPM) minimum flow rate @ 45 psi

Standards

- UPC/cUPC
- Energy Policy Act of 1992

MEETS ASME A112.18.1M

- ASME A112.18.1M

- ADA Accessibility Guidelines for Buildings and Facilities - 4.27.4 Controls and Mechanisms

Warranty

Danze products are covered by a manufacturer's limited "lifetime" warranty for manufacturing defects.

Flow Rate

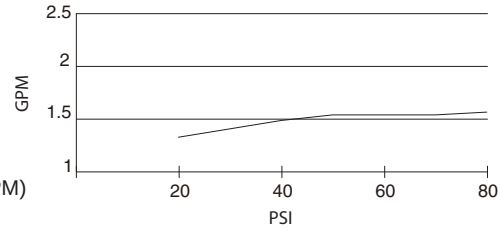

WaterSense • Meets EPA Criteria
Certified by IAPMO R&T

D511040T shown

Finishes Available

- Chrome
- Other: Refer to Price List for additional finish

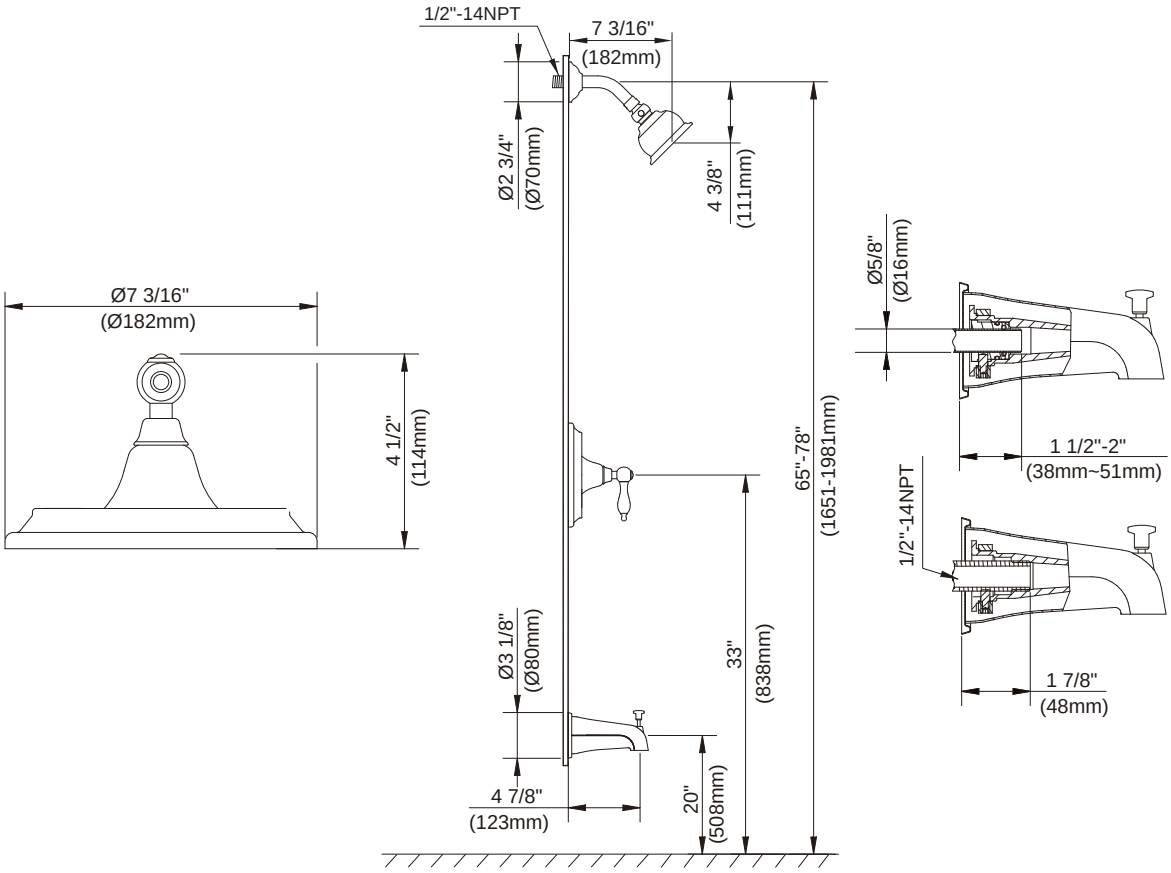

Submittal Information:

Job Name: _____ *Location:* _____

Contractor: _____ *Contact #:* _____