Installation Steps：

①

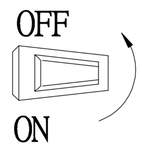

1. Turn off the power.

②

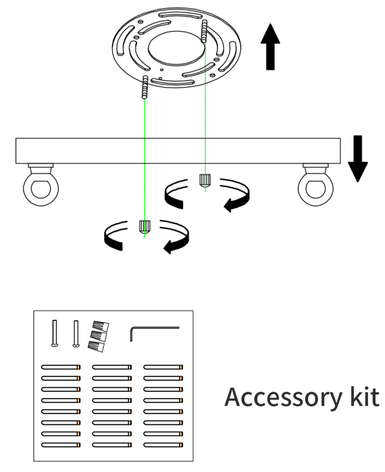

2. Unscrew the two plates and install the fittings (F).

③

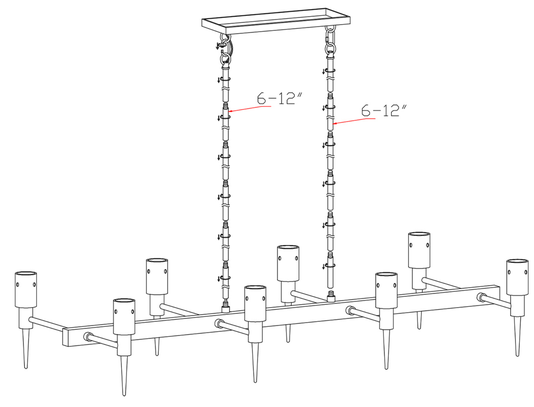

3. Both sides of the power cord need to pass through six straight pipes (I), the top one must be the straight pipe with a hanging ring (H). Align the straight pipe (I) with the hole on the light frame (J) and tighten it from the bottom to the top. When screwing, make sure the power cord passes through the middle of each pipe, and finally set the hanging ring on the square box (E) with the hanging ring on the straight pipe into the movable buckle (G) and tighten it.

④

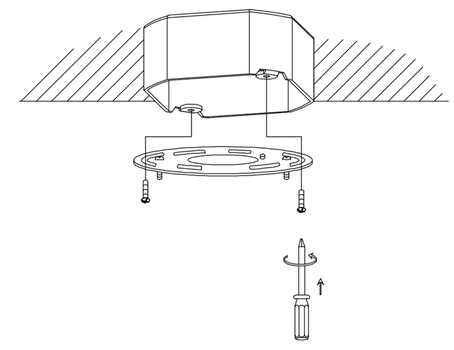

4. Use two machine wire (B) to tighten the pegboard (D) with the junction box (A) and install the pegboard (D).

⑤

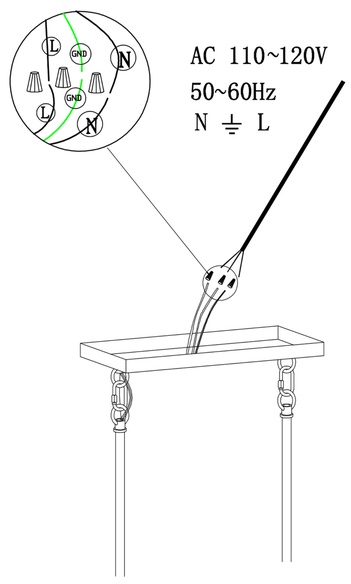

5. Correspond and connect the positive, negative and ground wires with the power line, and wrap the terminal cap (C) with adhesive tape.

⑥

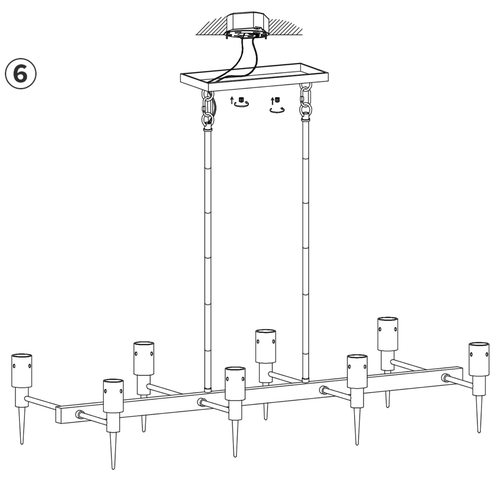

6. Lift the whole lamp upward, align the two holes on the square box (E) with the machine wire (B) on the pegboard (D), tighten the accessories (F) and hang the lamp holder.

⑦

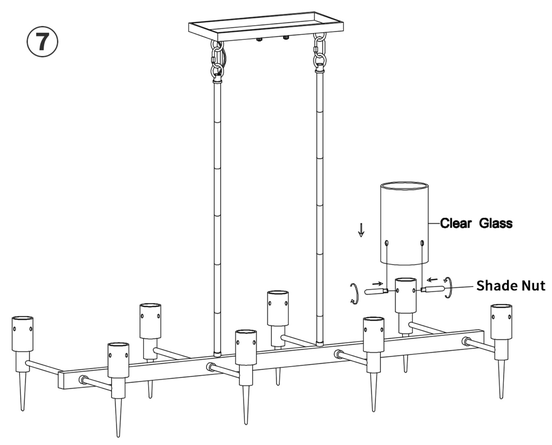

7. Align the holes on the glass cover (K) with the holes on the lamp head and then lower the glass cover (K) down, align the accessories (L) with the holes and tighten them to fix. Glass cover (K) installation is complete.

⑧

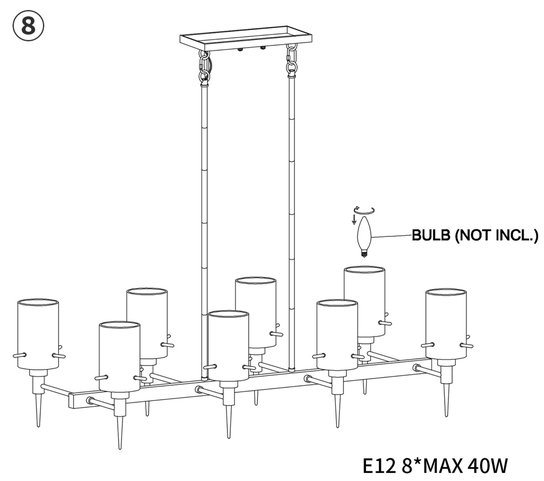

8. Install the bulb.

⑨

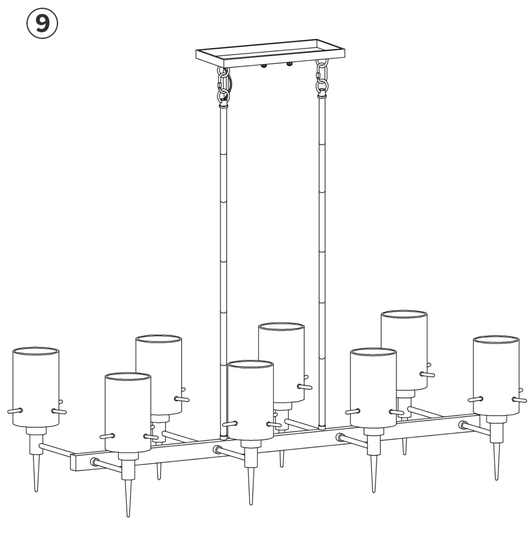

9. Installation is complete, turn on the light.

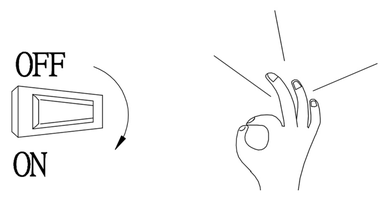

Notice： This light fixture should be installed in accordance with all applicable, local installation codes, and by a person familiar with the construction and operation of it, as well as the hazards involved. Inspect items and contents carefully. If any damage or defect is found, do not install it.

Accessories：
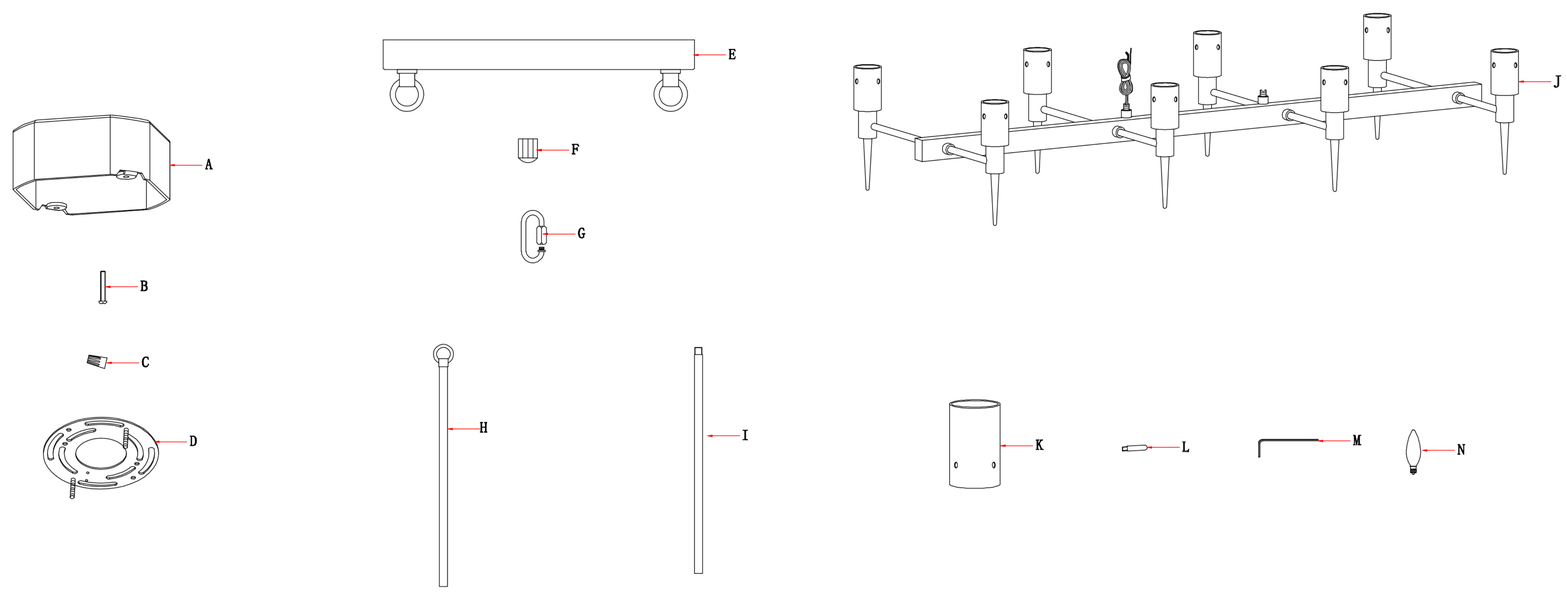
A: Junction box*0
B: Inch cross coil head machine wire*2
C: Wiring cap*3
D: Hanging plate*1
E: Square box*1
F: Decoration grain*2
G: Movable buckle*2
H: Hanging ring + Straight pipe*2
I: Straight pipe*10
J: Light stand*1
K: Clear glass*8
L: Shade Nut*24
M: Wrench*1
N: Light Bulb*0