INSTRUCTIONS MANUAL

Scan QR Code For
Assembly Reference Video



DOUBLE-BAR WHEELED SNOW SHOVEL

IF YOU PURCHASED THE PRODUCT ONLINE AND HAVE
ANY QUESTIONS OR CONCERNS
PLEASE CONTACT US VIA EMAIL, TEXT, OR PHONE

EMAIL:service2outdoor@gmail.com
TEXT:+1 628-263-4608(TEXT ONLY)
PHONE:+1 877-561-6450

Date of Manufacture: 26W31

Before You Start

1. Please read all instructions carefully.
2. Retain instructions for future reference.
3. Separate and count all parts and hardware.
4. Read through each step carefully and follow the proper order.
5. We recommend that, where possible, all items are assembled near to the area in which they will be placed in use, to avoid moving the product unnecessarily once assembled.
6. Always place the product on a flat, steady, and stable surface.
7. Keep all small parts and packaging materials for this product away from babies and children, as they potentially pose a serious choking hazard.

Parts list

1. Shovel 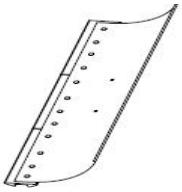 **X1**	**2. Fix adjuster** 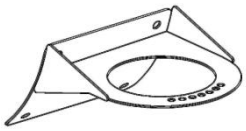 **X1**	**3. Wheel base assembly** 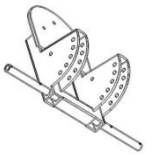 **X1**	**4.Wheel** 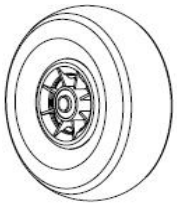 **X2**	**5. Down handle** 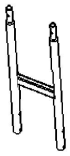 **X1**
6. Up handle  **X1**	**7. Big Circular Plate**  **X1**	**8. Flange screw (M8*45)**  **X2**	**9. Fix pin （φ8*45）**  **X3**	**10. Lock nut (M6)**  **X8**
11. Cotter pin  **X4**	**12.Washer** 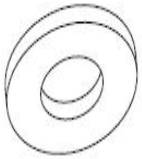 **X4**	**13. Little Circular Plate** 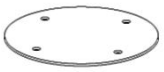 **X1**	**14. Button head screw （M6*20）**  **X8**	**15. Lock nut （M8）**  **X2**
16.Wrench  **X1**	**17.Wrench**  **X1**			

Assembling step

STEP 1. Assemble component 1# Snow shovel and 2# Fix adjuster together using four 14# screws and four 10# nuts.

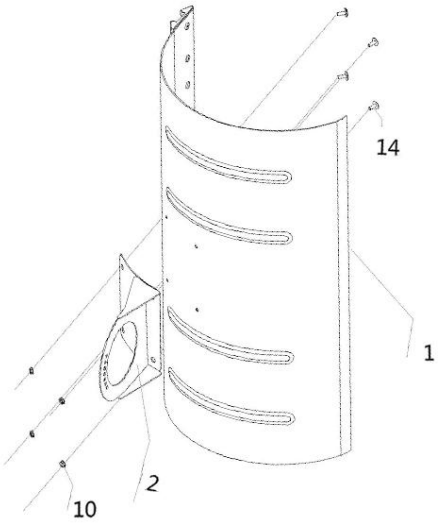

STEP 2. Use four 14# screws and four 10# nuts to fix the 3# wheel base assembly and the 2# Fix adjuster (please refer to the illustration and note that 7# Big circular plate and 13# Little circular plate need to be assembled simultaneously), and then insert the 9# Fix pin into the adjustment.

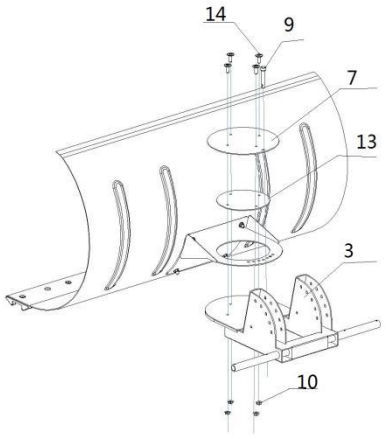

STEP 3. Connect the 5# Down handle and the 3# Wheel base assembly using 8# screws and 15# nuts as shown in the diagram. Then insert the 9# Fix pin into the adjustment hole. Finally, insert the 6# Upper handle into the 5# Down handle.

Please note: When assembling, make sure the parallel holes of the handles are aligned.

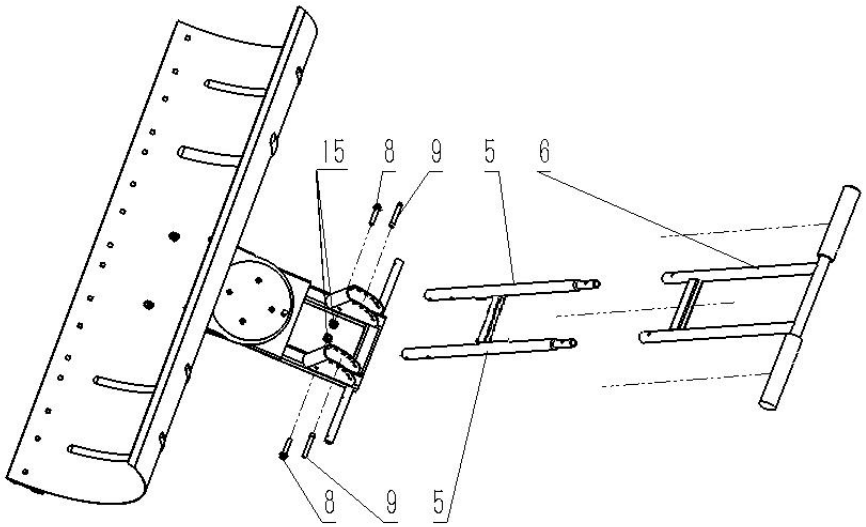

STEP 4. Insert the 11# Cotter pin as shown into the inner hole of the wheel axle of the 3# Wheel base assembly. Then, place the 12# washer, followed by the 4# wheel, and the 12# washer again. Finally, Insert the 11# Cotter pin into the outer hole of the wheel axle **and split both ends outward as shown. Fix in place to prevent loss.**

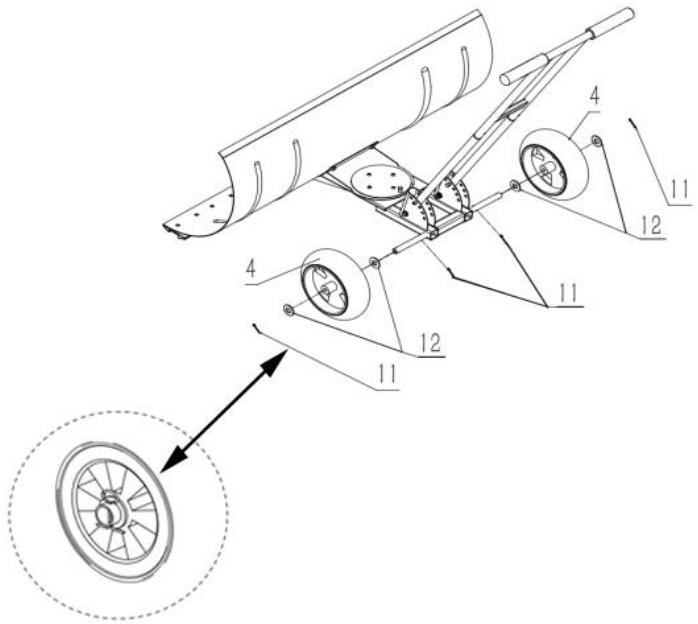

Note: The angle of the shovel head / the height of the handle can be adjusted by removing the plug from the 9# Fix pin.