ASSEMBLY INSTRUCTIONS

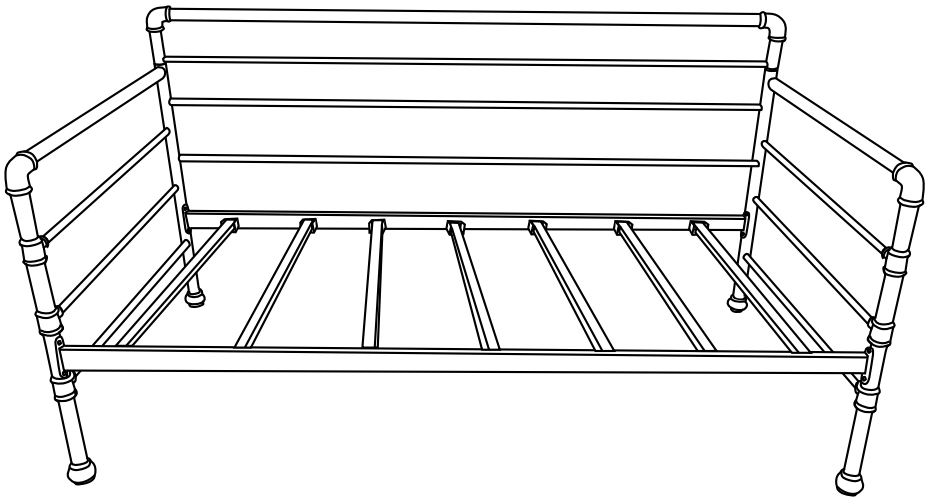

NOTED TO CUSTOMERS:

1. For ease and speed of assembly we recommended that before you commence each step of the assembly that you indentify all the parts required to complete step.
2. We recommended that where possible you allow sufficient space to assemble the item as close as possible to the place where it be once assembled.
3. For the protection of your furniture we recommended that the product is placed on protected surefaces during assembly to prevent any damage.
4. During assembly do not over tighten, as this may damgae the prodcut.
5. Please ensure you retain all the product packaging until the item completely assembled.
6. Please periodically check all fitting and re-tighten as necessary.
7. It is recommended that this item should be assembled by two adults.

1. Left bed pannel 1 pc 	2. Right bed pannel 1 pc 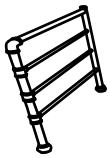	3. Side rails 2 pcs 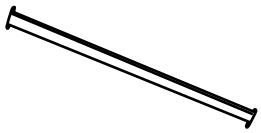	4. Slat 7 pcs 
5. Back round tube 2 pcs 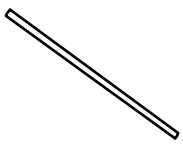	6. Back top 1 pc 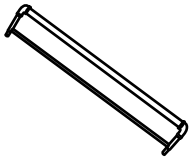	A. Bolt 8pcs  Dia8mm *3/4″L	B. Bolt 18pcs  Dia 6mm *1/2″L
C. Bolt 4pcs  Dia 6mm *2″L	D. M6 Allen Key 1pc 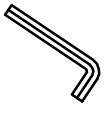	E. M8 Washer 8pcs 	F. M6 Washer 8pcs 

STEP 1

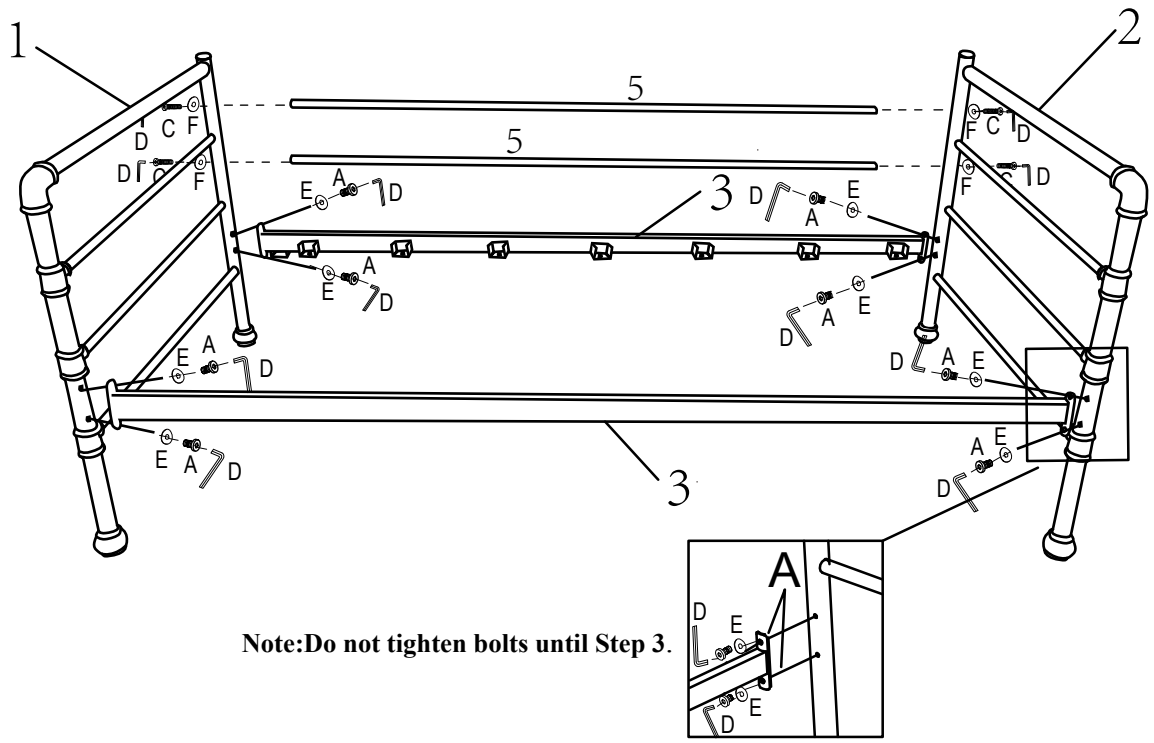

Note:Do not tighten bolts until Step 3.

STEP2

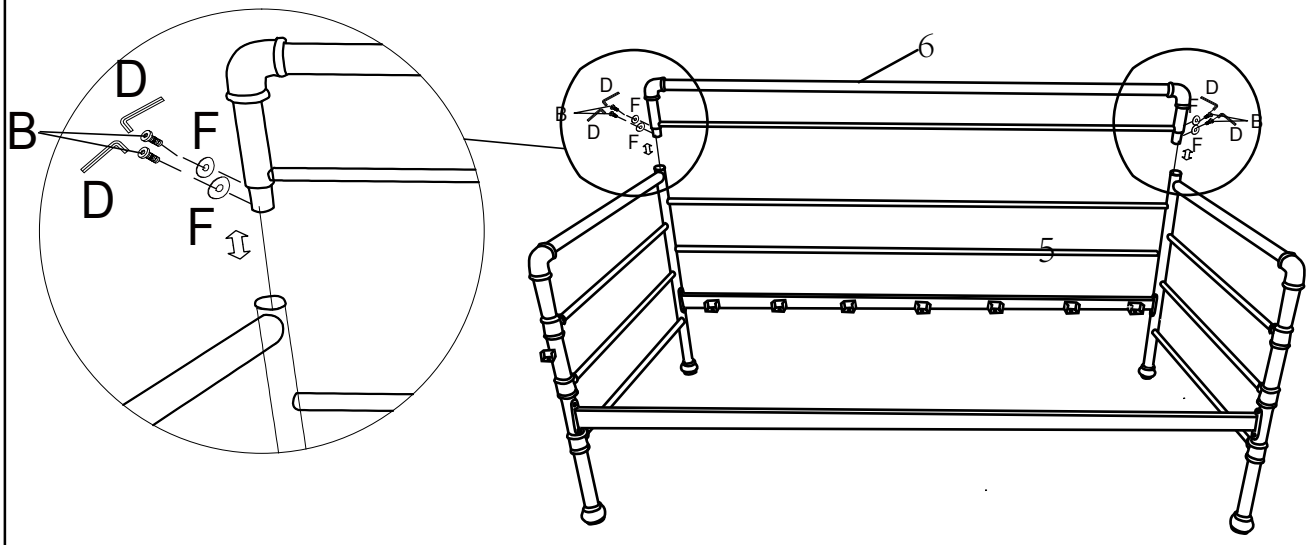

Note: Do not tighten bolts until Step 3.

STEP 3

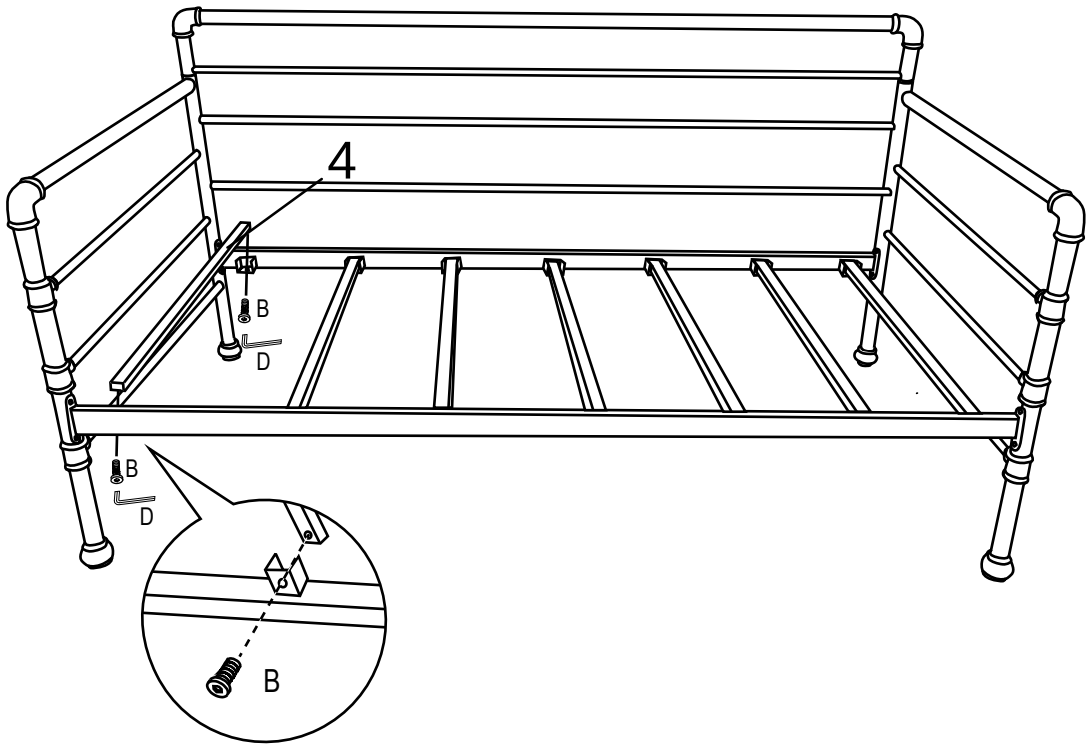

Please tighten all bolts at this points.
Note: Do not tighten bolts (B) until all of them are attached.

STEP4

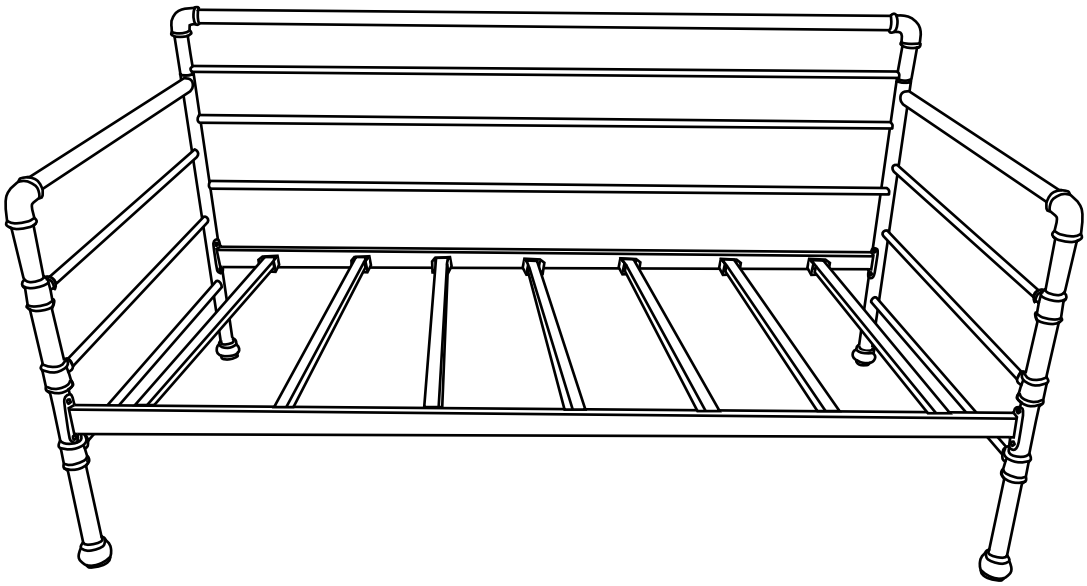

Warning:
1) Always use the recommended size of mattress or mattress support to help prevent the likelihood of entrapment or falls.
2) For youre safety, do not jump on the bed.
3) The use of water or sleep flotation mattress on the bed is not recommended.
4) The weight load on this bed should never exceed 500lbs. Exceeding this weight limit may cause the bed to collapse, resulting in serious personal injury and properly damage.