ASSEMBLY INSTRUCTIONS

(English)

L007013-H560-PR1BSL

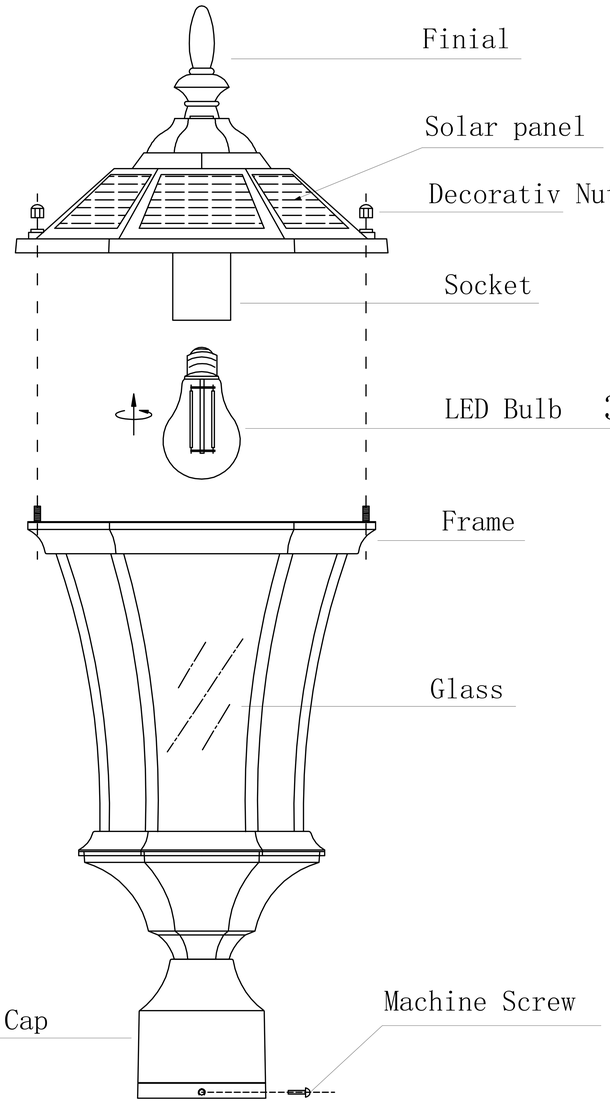

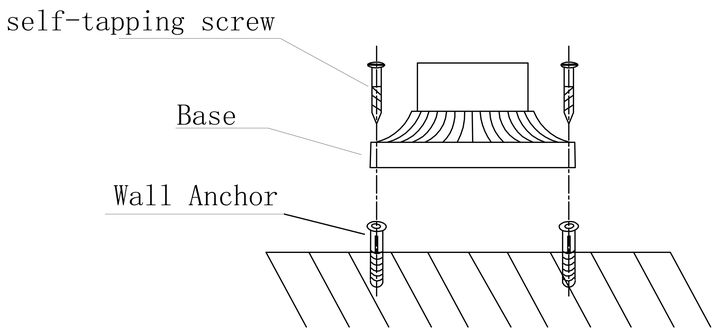

Follow the safety and assembly instructions carefully, and keep this manual in a safe place:

1. Read this manual carefully. If in doubt, consult the vendor.
2. Based on health and safety rules, you must not convert (CE), or make any changes to the solar lights yourself. Should you ignore this the guarantee will be null and void.
3. Do not expose the product to extreme heat, extreme pressure, or other inappropiate use. Should you ignore this again the guarantee will be null and void.
4. This product is not a toy, and is not be used as such by children.

Solar installation instructions:

A. Then the batteries need to be fully charged. Place the light in sufficient (sun)light, for one or more days.

B. Assemble or place the solar lights without putting any pressure on the solar-panel or protection-hood. Do not use a hammer!

C. Because of the built-in light sensor, the light will switch on automatically when it turns dark. Place the light carefully in a proper position, for good use of the solar-sensor.

D. The lamp is provided with a solar-cell to charge the battery/batteries. For this is needs sufficient sunlight/daylight. Position the lamp with care, so that the battery can fully charge during the day.

E. Regularly clean the solar cells with water and mild detergent for a maximum storage of sunlight.

Technical specifications and guiding lines per model

- Take notice of all technical specifications for your product at all times. See the pictorial signs on the enclosed users guide.
- Below is an explanation of the pictorial signs.

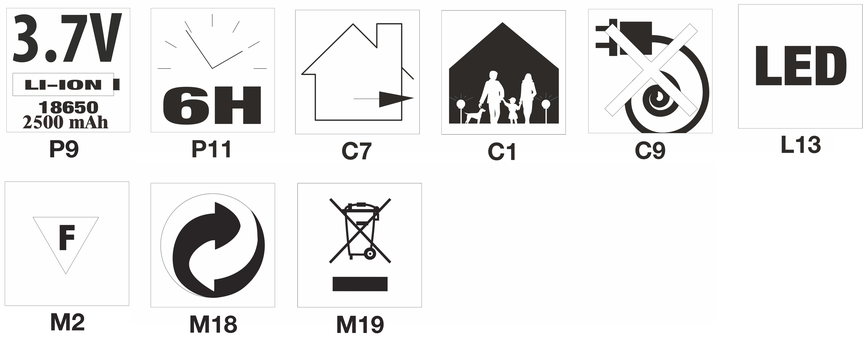

P9 This model contains 1x Li-Ion 3.7V battery of type 18650.

P11 Under normal circumstances the light will burn for 6 hours after turning on power

C7 Solar lighting is designed solely for outdoor use

C1 Safe around children and animals

C9 No connection to the electrical circuit required

L13 This light uses 1 or more LED s as a light source. This combines a long life-time with low power consumption. Solar LED s are not interchangeable.

M2 The product is suitable for placement on/connecting to regularly flammable material/ surfaces. Built in products must under no circumstances be covered by isolation material, or any material of that sort.

M18 Please recycle packaging

M19 Please dispose of batteries in the correct way