GT-W2416-16

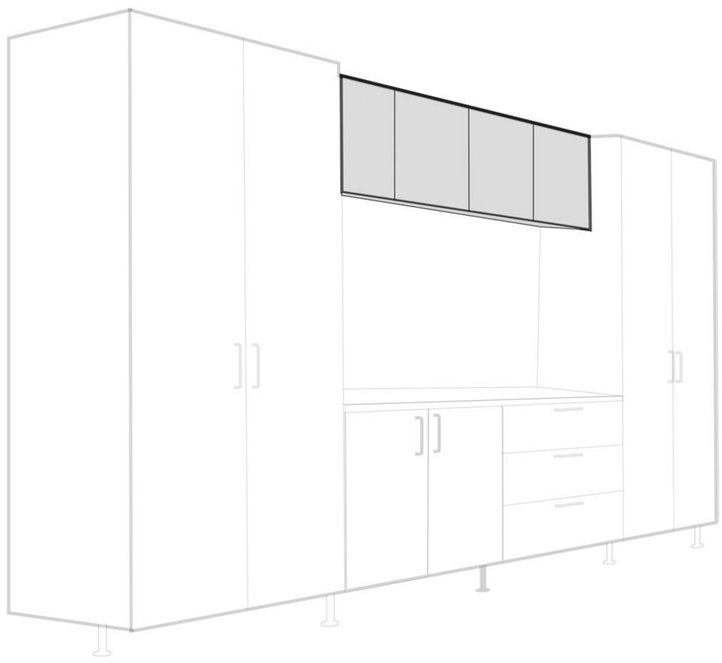

GARAGE TECH

Serious or fatal crushing injuries can occur from furniture tipping.
To help prevent tipping:

- Never allow children or adults to climb on this furniture
- Never open more than one drawer at a time
- Casters and skids are intended for manufacturing and shipping

purposes only and must be removed from all furniture at installation

If a tipping restraint is not supplied with the furniture, immediately contact the store where the furniture was purchased.
DO NOT INSTALL WITHOUT A TIPPING RESTRAINT.
Use of a tipping restraint may only reduce, but not eliminate the risk of tipping.

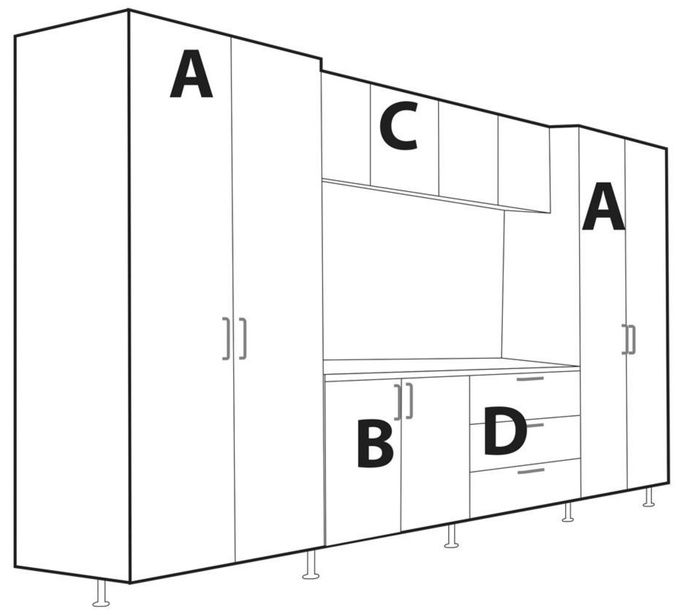

C

ⓐ TOP

x 1

ⓑ BOTTOM

x 1

ⓒ BACK

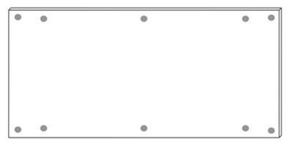

x 1

ⓓ SIDE

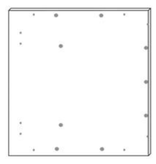

x 2

ⓔ DOOR

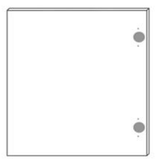

x 2

C

x 18 x 18 x 14 x 4

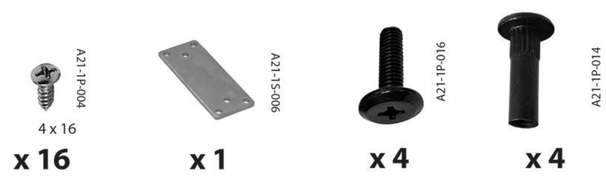

x 16 x 1 x 4 x 4

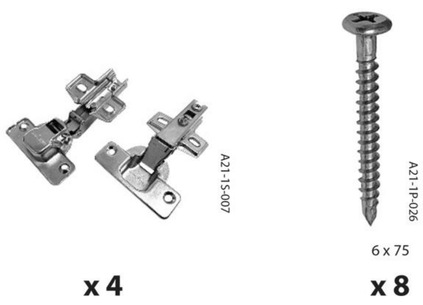

x 4 x 8

1

C-1

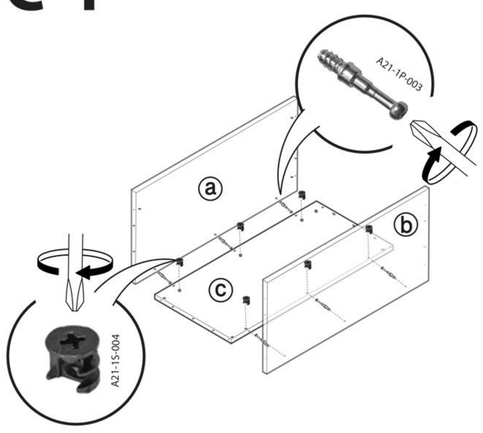

C-2

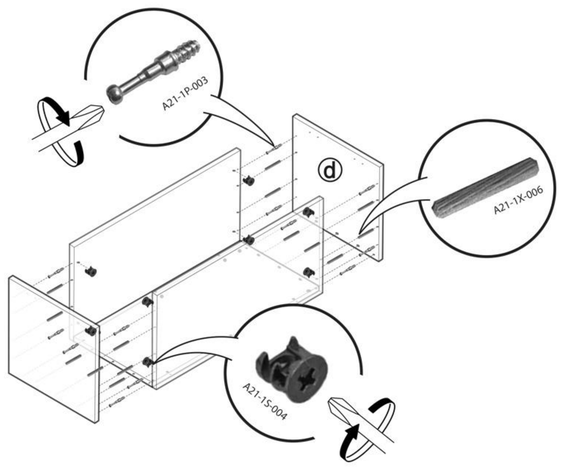

2

C-3

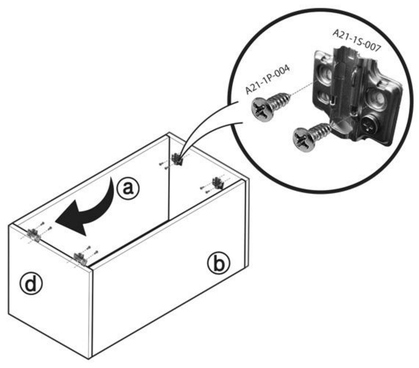

C-4

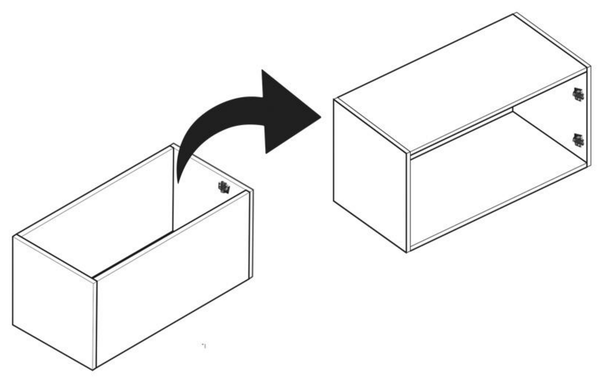

3

C-5

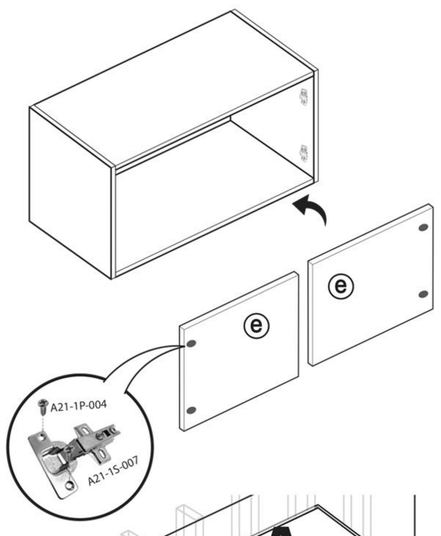

C-6

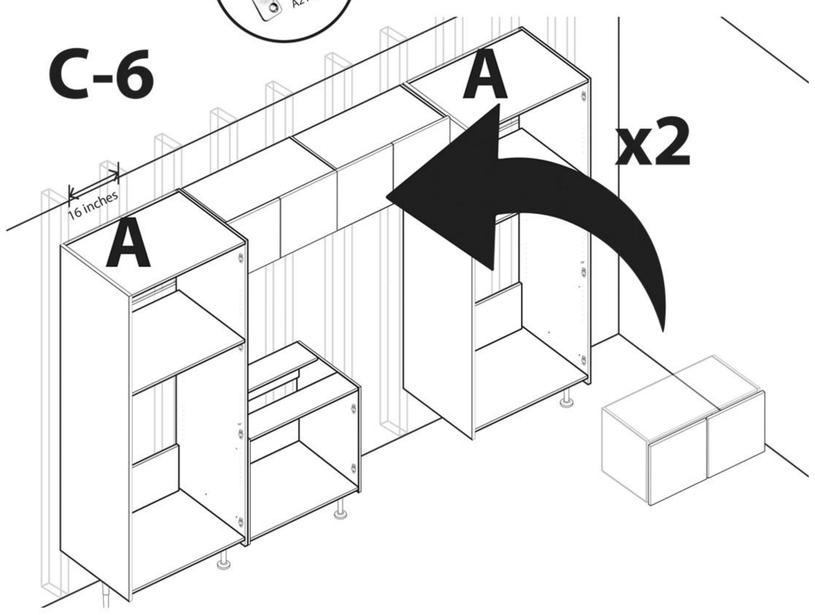

4

C-7

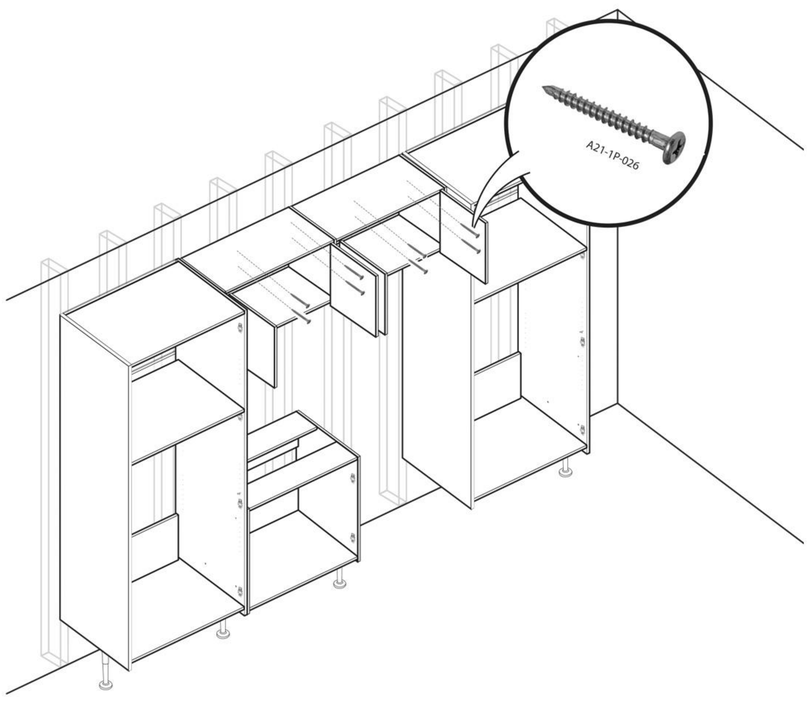

5
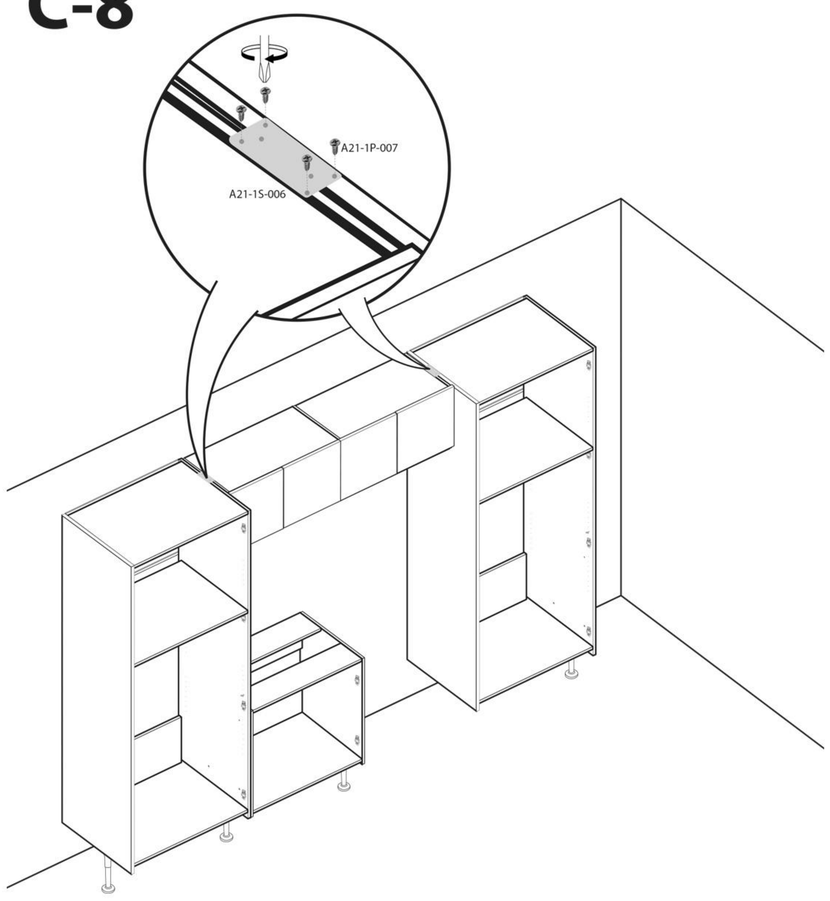
C-8