Dining Table

Assembly Instructions

CZ068 | 120CM



Assembly Overview

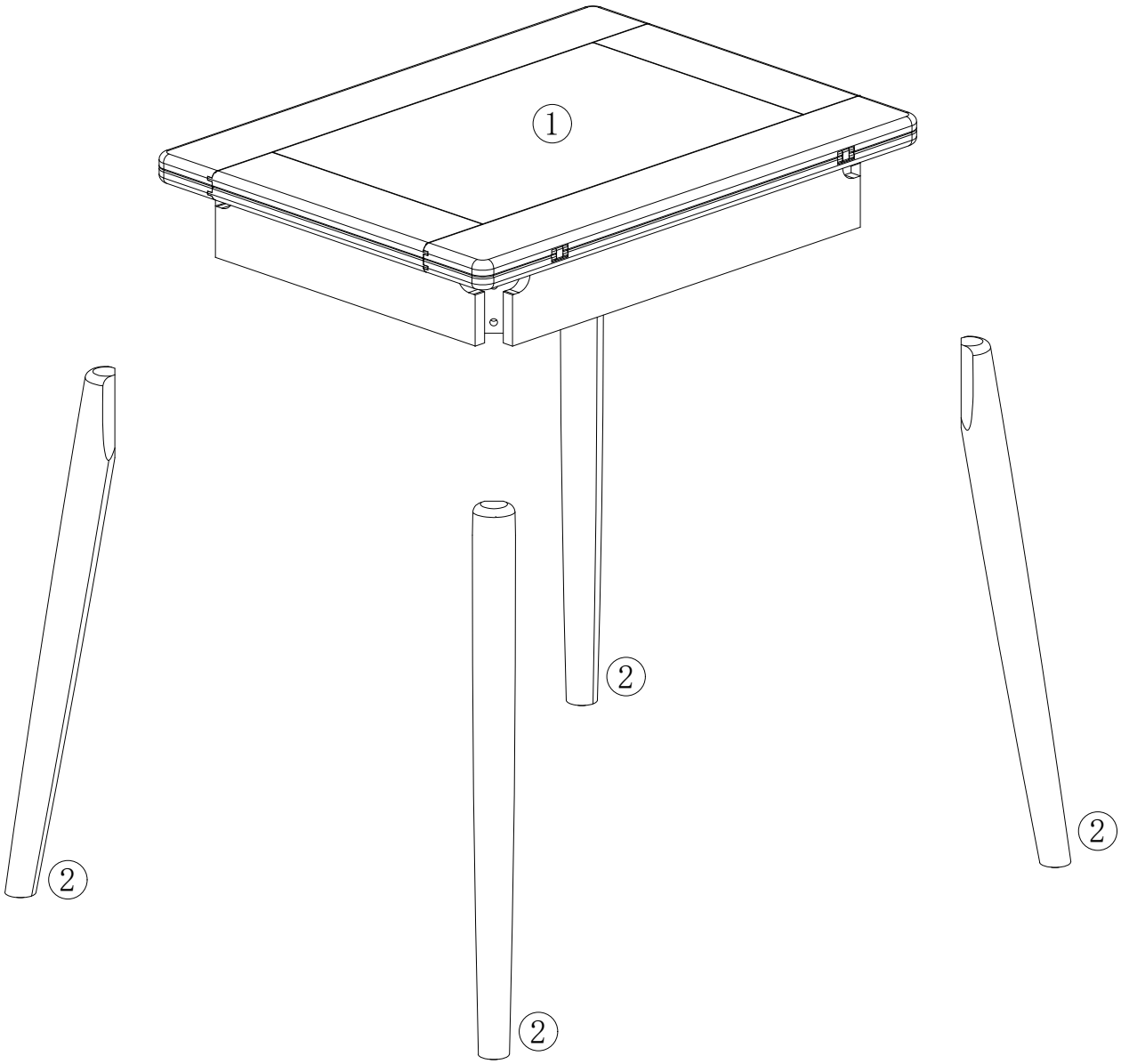

Parts List

1 Tabletop assembly (preassembled)

800 × 600 × 143MM

Qty: 1

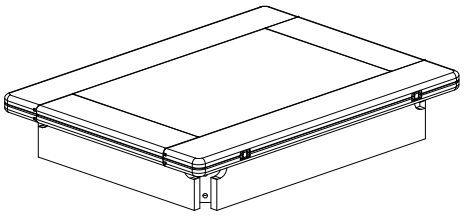

2 Leg

722 × Ø55MM

Qty: 4

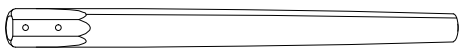

Hardware List

A Hex socket screw

M8 × 75MM

Qty: 8

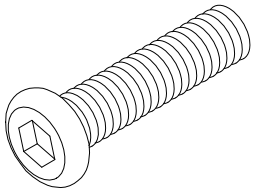

B Flat washer

M8 × 16MM

Qty: 8

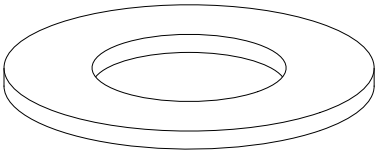

C Spring washer

M8

Qty: 8

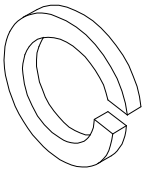

E Leveling foot (preinstalled)

M6 × Ø19 × 20MM

Qty: 4

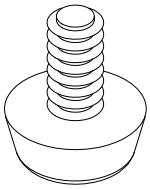

F Latch (preinstalled)

50 × 30MM

Qty: 1

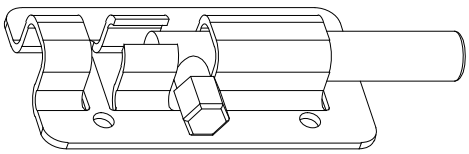

Tool

D Hex key

M5 × 100MM

Qty: 1

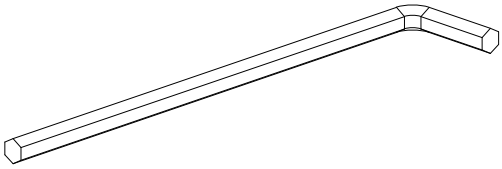

Choose the Correct Screws

Using the correct screws helps prevent damage to components.

Example

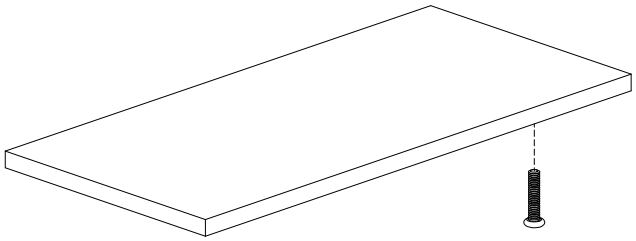

Incorrect

Oversized screws can crack the panel.

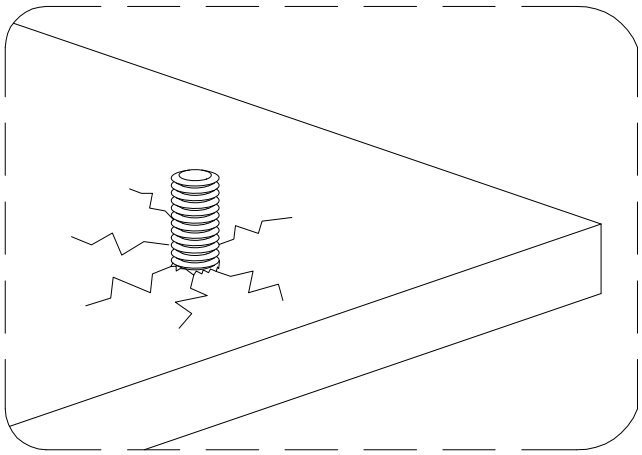

Correct

Use the correct size screws.

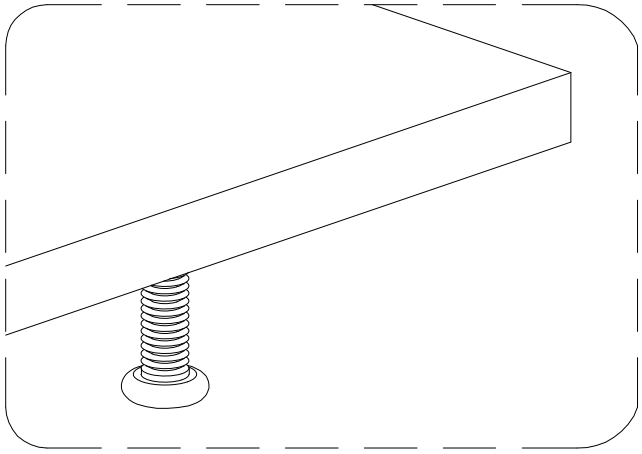

Step 1

Attach legs (2) to tabletop assembly (1), as shown.

Hardware: A × 8, B × 8, C × 8 Tool: D × 1

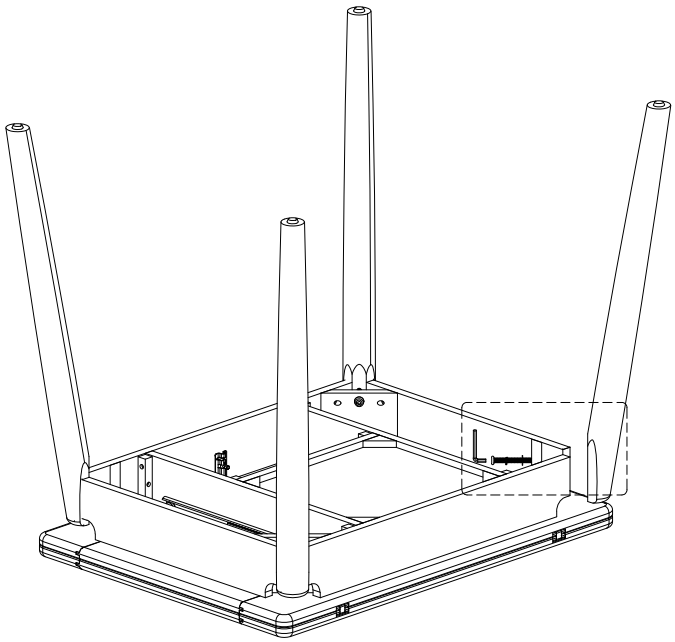

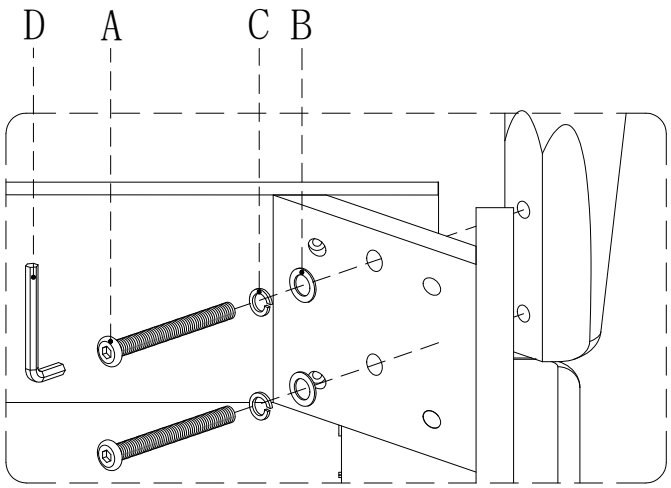

Step 2

Adjust the preinstalled leveling feet to level the table.

Note: The latch must be inserted when the table is in use.

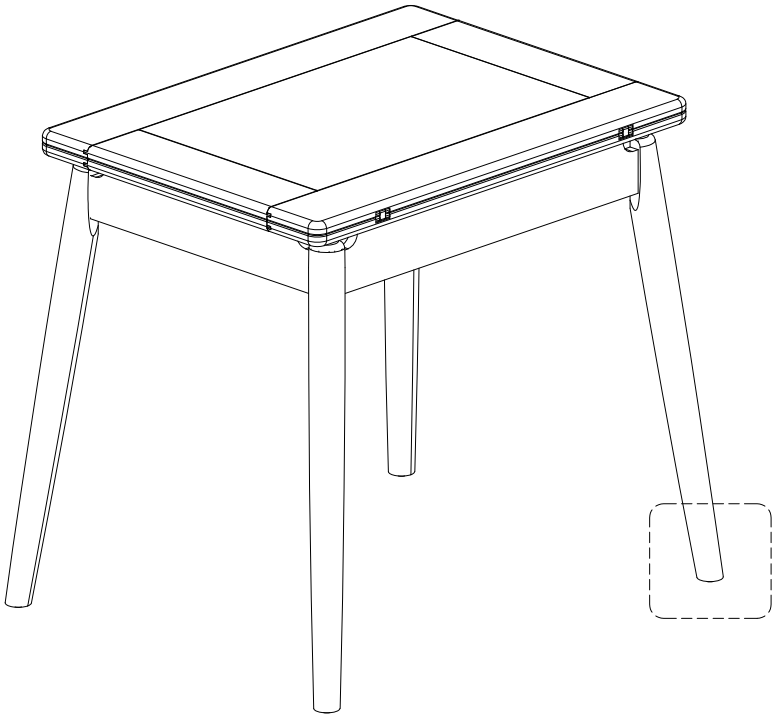

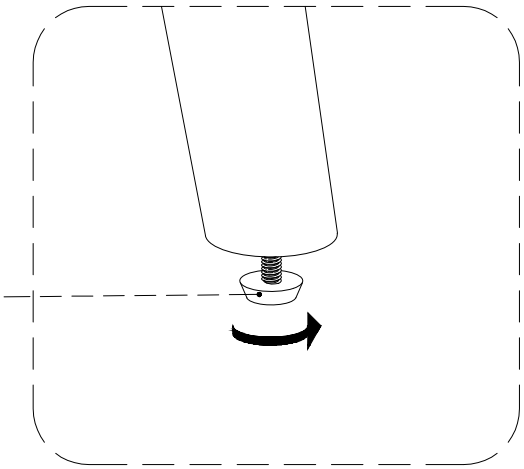

Step 3

To extend the tabletop, lower the latch and push the panel forward, as shown.

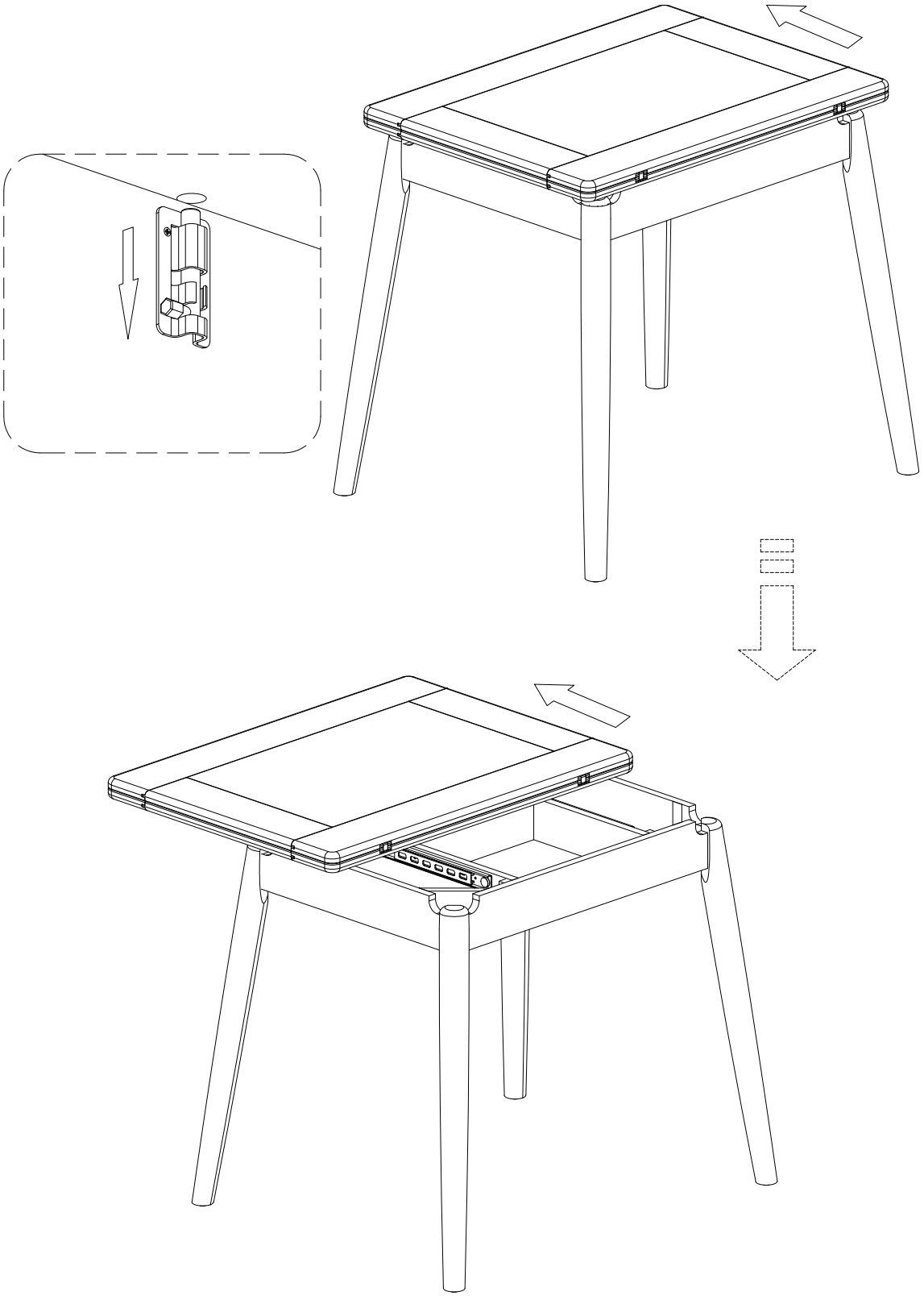

Step 4

Flip the top panel over and insert the latch.

Note: The latch must be inserted when the table is in use.

Assembly is complete. Open or close the panels as needed.

