Custom Multy Spy Dry And Wet Sauna (Model:806)

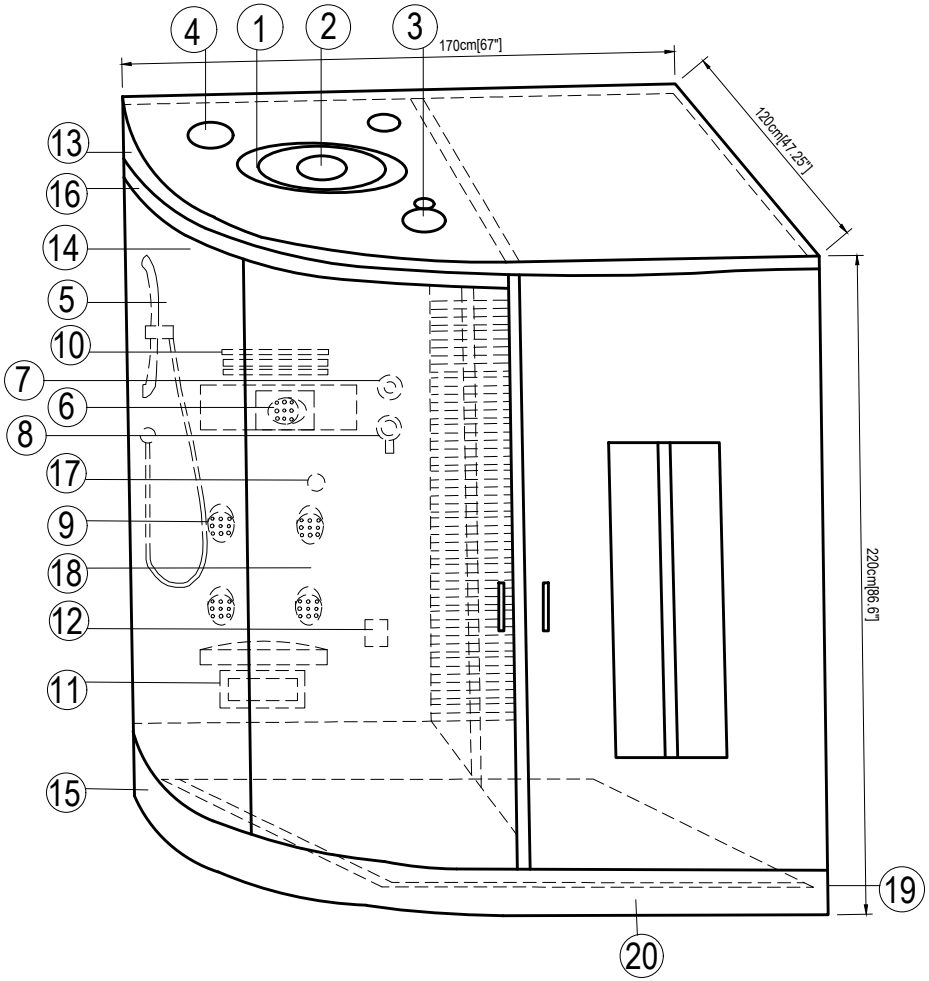

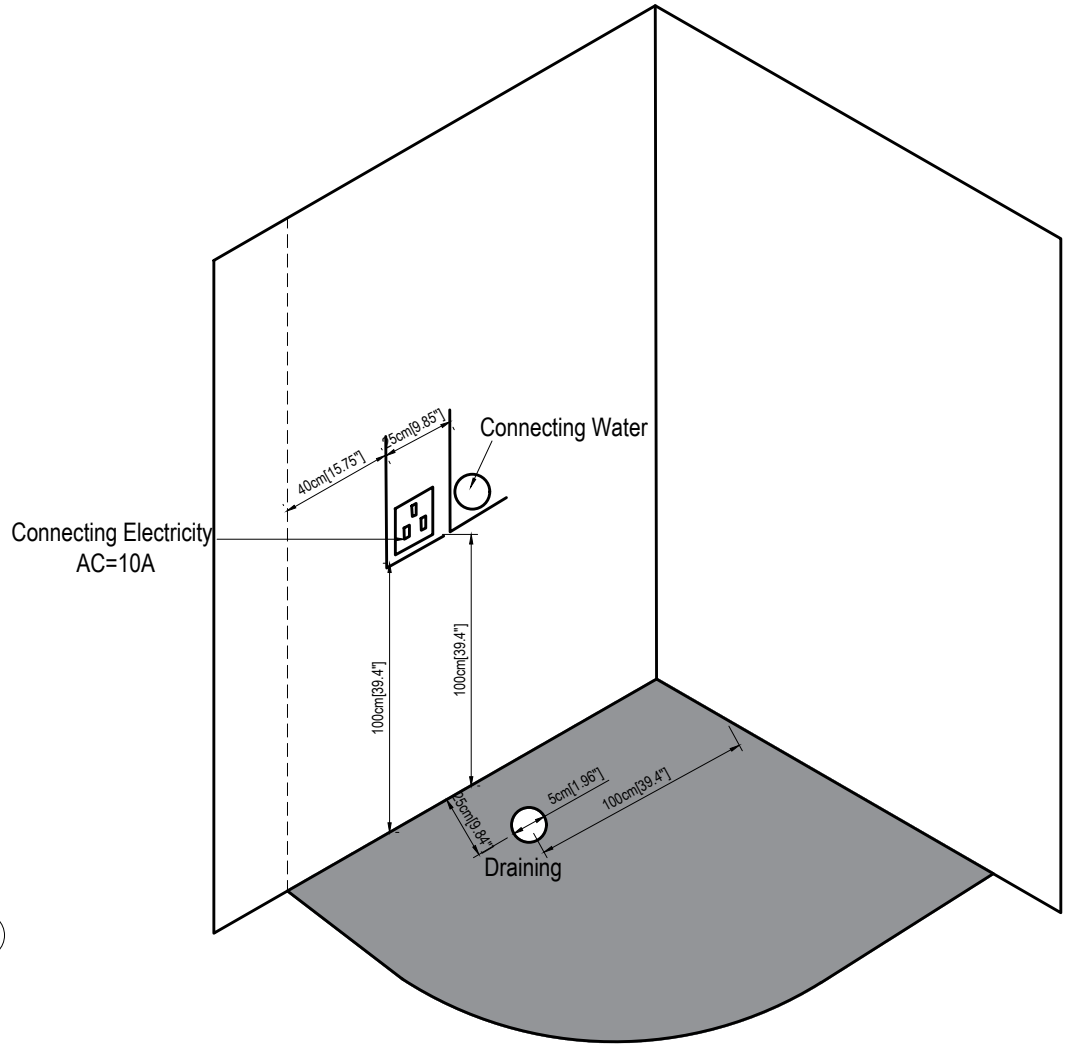

SANICANADA
DESIGN TO ENJOY FOR LIFE

1.Roof **2.** Fan **3.** Back Board **4.** Thermometer **5.**Bucket,Spoon **6.** Stool **7.** Sauna Oven **8.**Wood Flooring
9.Side Aluminium **10.**Inside Glass Door **11.**Drainage **12.**Base **13.** 3Optional **14.** Ceiling Light **15.**Speaker
16. Shower Head **17.**Explasion Proof Light **18.**Sand Timer **19.**Acryl Back Board **20.**Temperature sensor(Optional)
21. Hand shower **22.**Mirror **23.**Control Panel **24.** Function Switch **25.**Mixer **26.**Jet **27.**Foot massage(Optional)
28. Steam box(Optional) **29.** Sliding glass door **30.** Handle