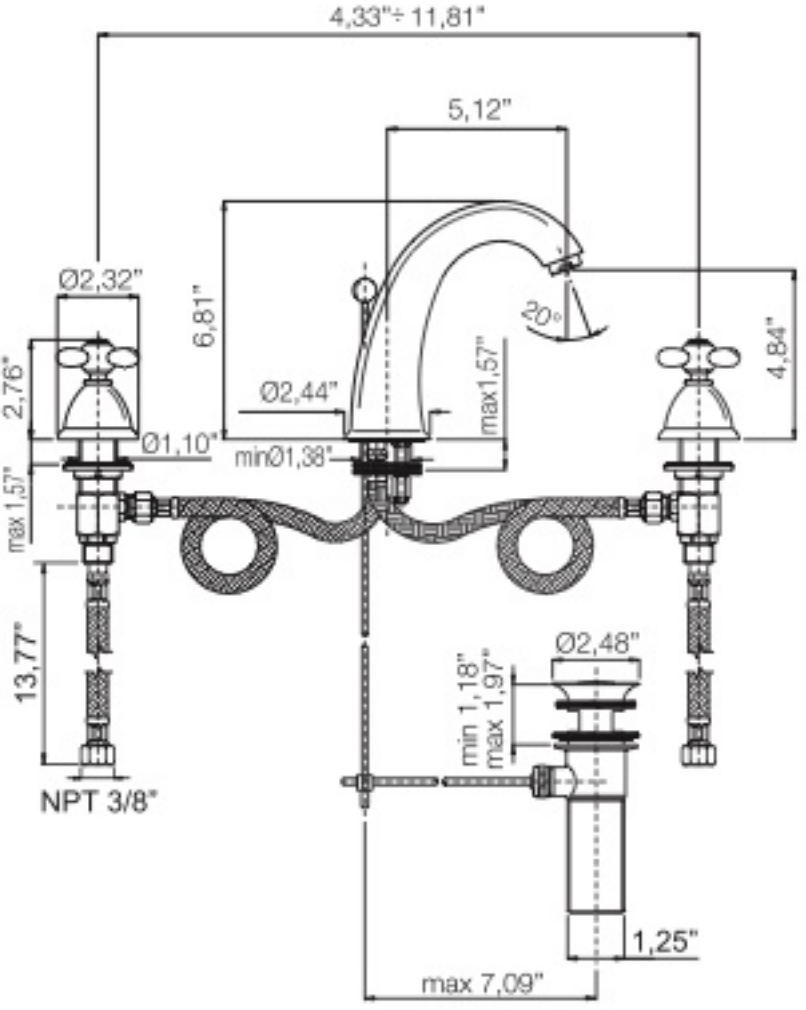
4,33"÷11,81"
5,12"
Ø2,32"
6,81"
20°
4,84"
2,76"
Ø2,44"
max1,57"
Ø1,10"
minØ1,38"
max 1,57"
13,77"
Ø2,48"
min 1,18"
max 1,97"
NPT 3/8"
1,25"
max 7,09"