TEAR SHEET



Cara Small Sculpted Pendant

Item # RL 5039NB-PW

Designer: Ralph Lauren

O/A Height: 51.75"
Fixture Height: 8.5"
Min. Custom Height: 14.75"
Width: 18"
Canopy: 4.5" Round
Finishes: BZ, NB, PN
Shade Treatments: PW
Lightsource: Dedicated LED
Wattage: 15w (2100lm)
Weight: 9 Pounds
Note: 120V Configuration Only | Custom Height Available

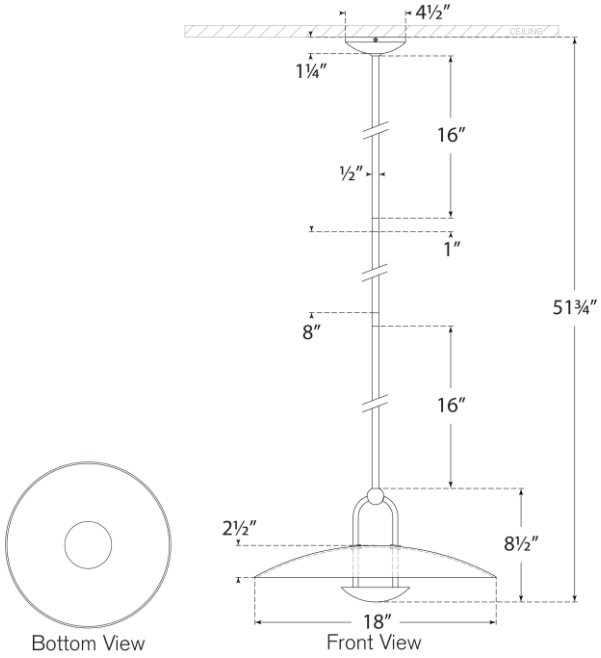

VISUAL COMFORT & CO.

DAMP LED 4