KS6120,1,2,3,5,6,7,8CML
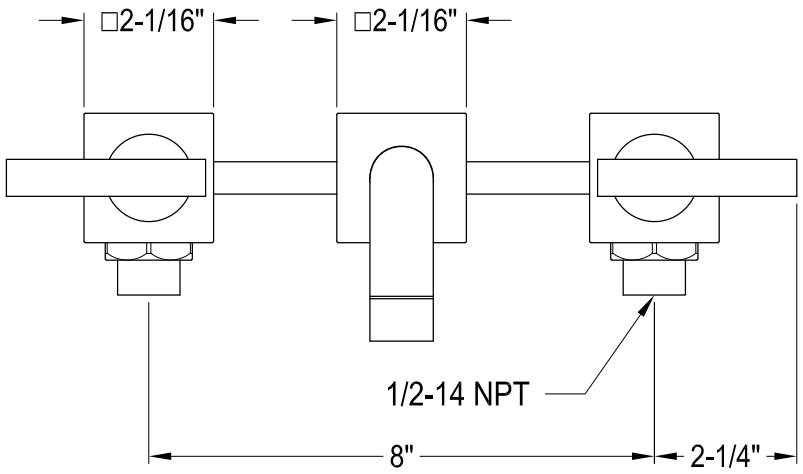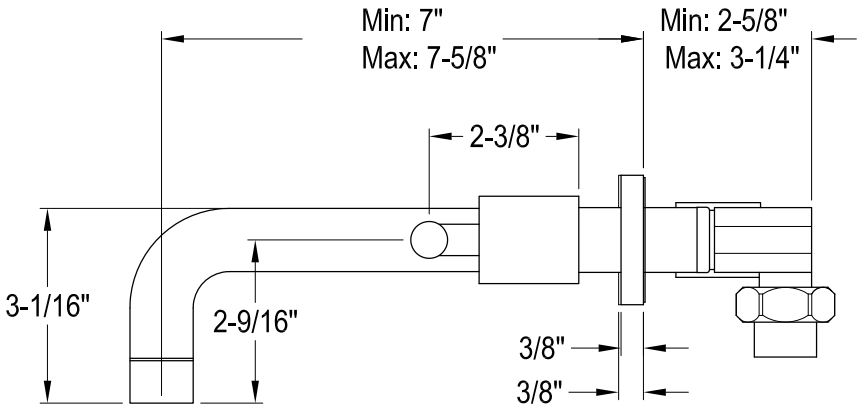
Twin Handles Wall Mount Bathroom Faucet