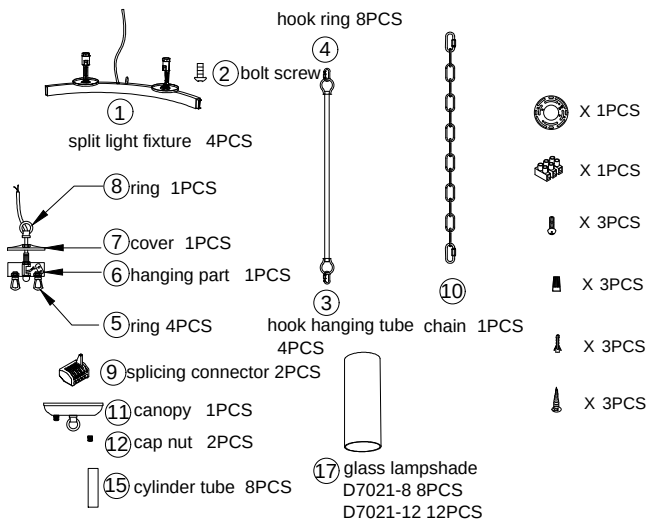

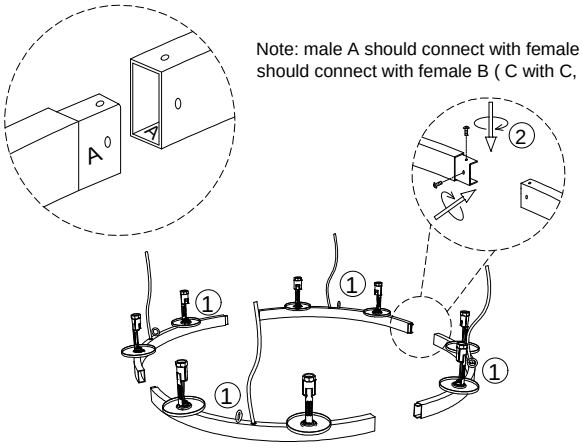

1.Combine the split light fixture ① together and fasten it with screw ②.

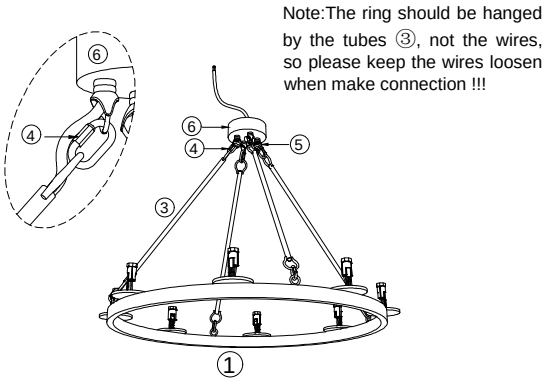

2.Let the wire go through the hook hanging tube ③, hang the fixture to the hanging part ⑥ with hook ring ④, let the wires go through the hanging part ⑥.

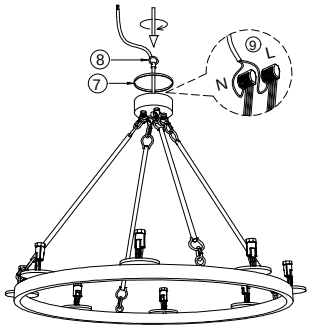

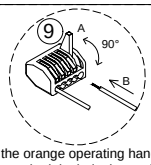

1.Pull the orange operating handle A to open the inlet hole, insert the wire B.
2.Press the operating handle A to finish wiring.
(Note: one inlet hole can put 2 or 3 wires inside)

3.Connect all the wires by parallel with connectors ⑨(all live line-L use one connector, and neutral Line-N use another connector).
4.Let the wire go through the cover ⑦ and ring ⑧, rotate the ring ⑧ to close the cover ⑦ to the fixture.

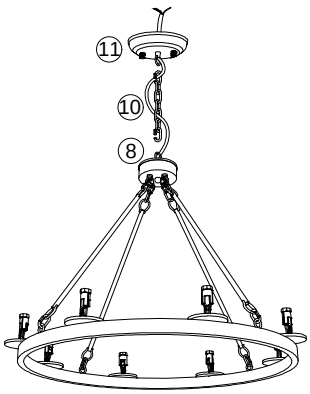

5.Hang the fixture to the canopy ⑪ with chain ⑩, let the wire go through the chain ⑩ and canopy ⑪.

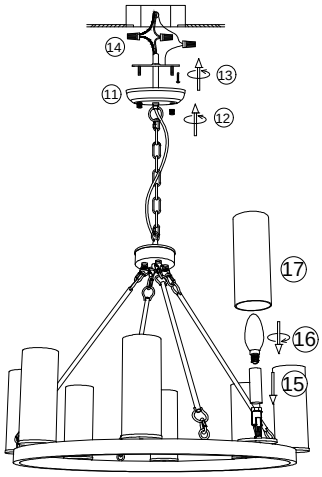

6.Install the bracket to the ceiling junction box with screw ⑬.
7.Connect the wire to your home line with cap connector ⑭.
8.Install the fixture to the bracket with cap nut ⑫.
9.Put the cylinder tube ⑮ to the bulb holder and install the bulb ⑯, rotate to install the glass lampshade ⑰ at last.

Please read carefully before installation!!!
Note : Please make sure that the electricity is powered off during installation !
Only a professional electrician should install this kind of product !