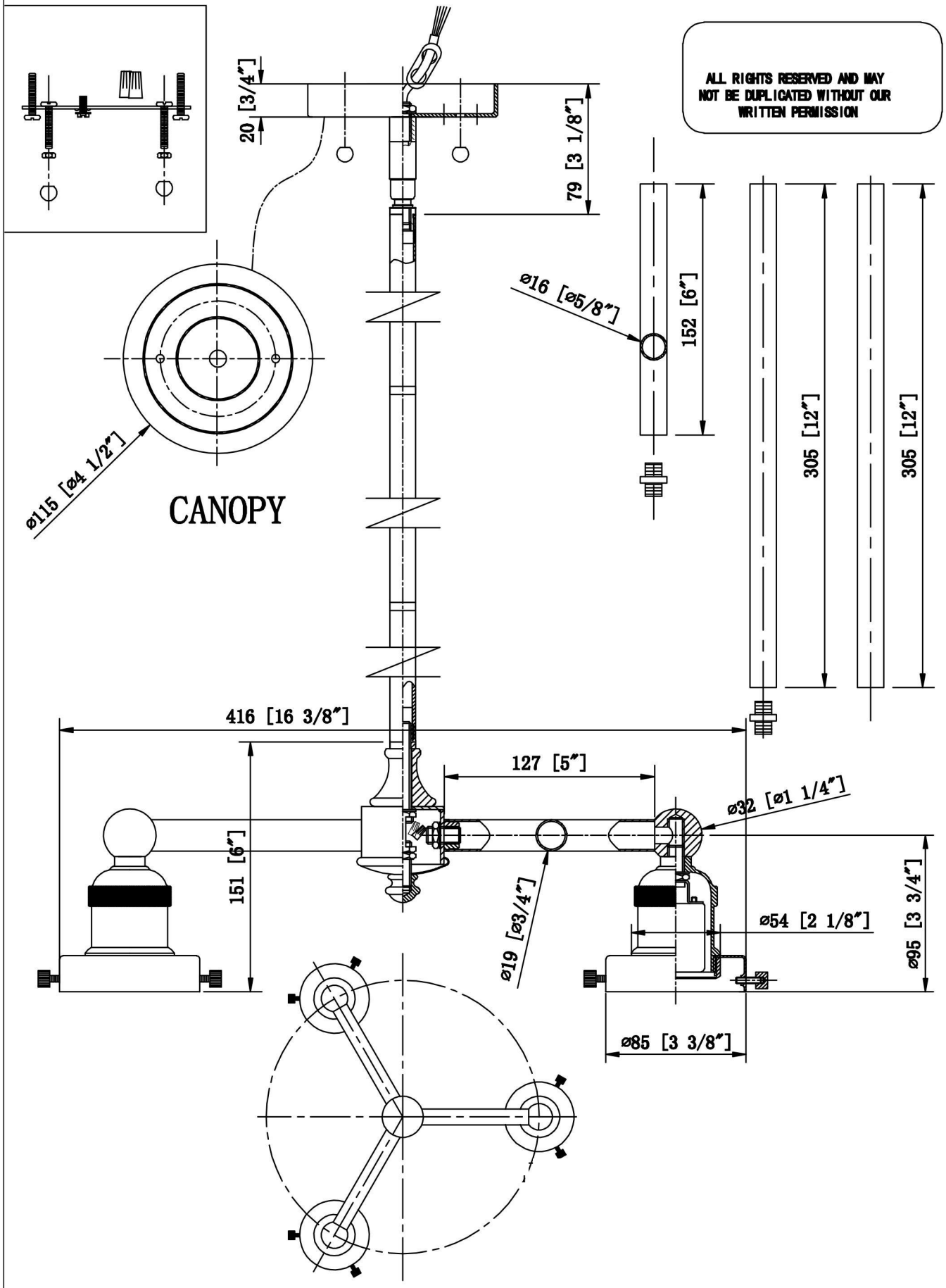
ALL RIGHTS RESERVED AND MAY NOT BE DUPLICATED WITHOUT OUR WRITTEN PERMISSION
20 [3/4"]
79 [3 1/8"]
ø16 [ø5/8"]
152 [6"]
305 [12"]
305 [12"]
ø115 [ø4 1/2"]
CANOPY
416 [16 3/8"]
127 [5"]
ø32 [ø1 1/4"]
151 [6"]
ø19 [ø3/4"]
ø54 [2 1/8"]
ø95 [3 3/4"]
ø85 [3 3/8"]