Dimensional Details

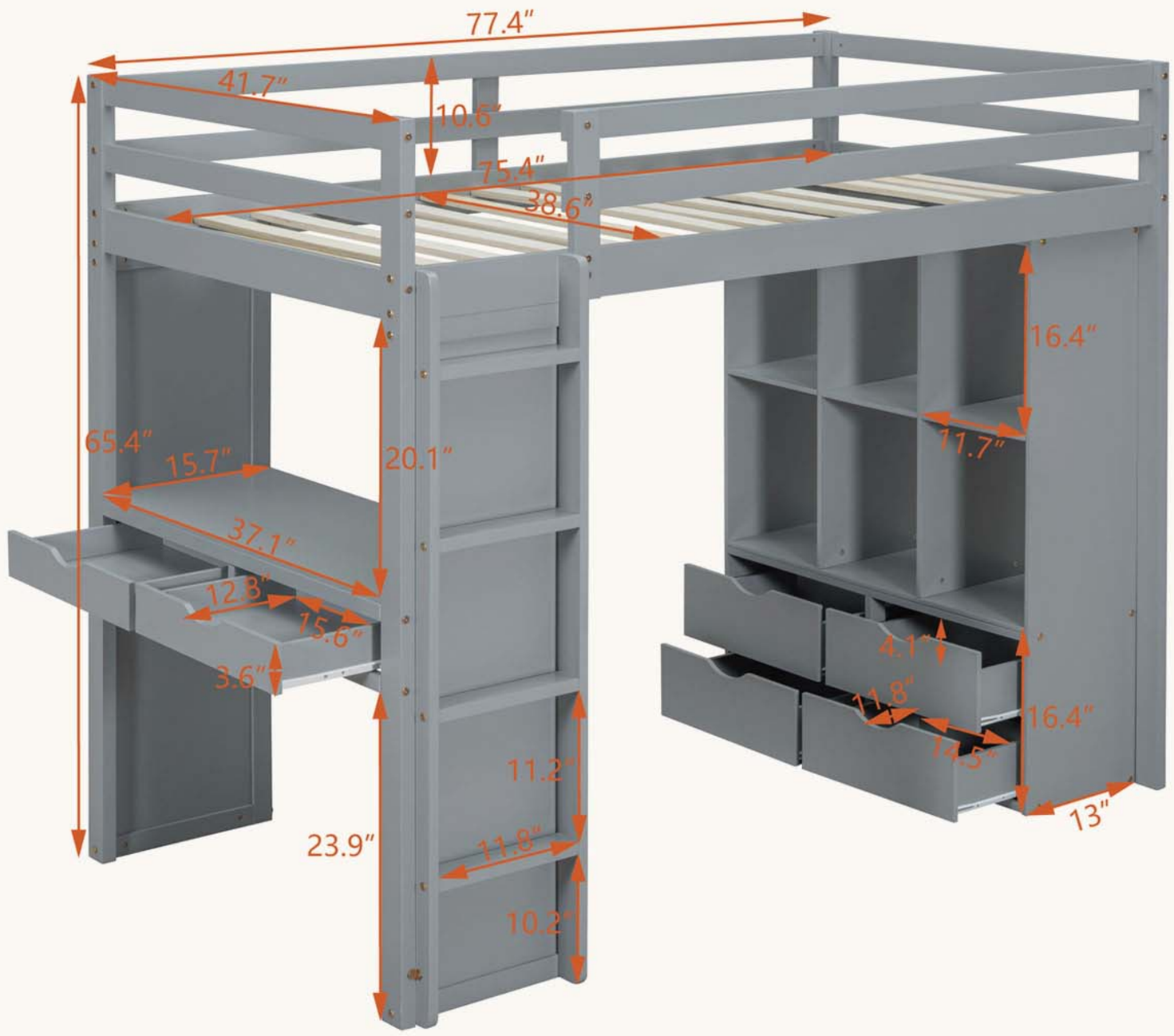

Product Dimensions

- **Length (in.)** :77.40
- **Width (in.)** :41.70
- **Height (in.)** :65.40
- **Weight (lbs.)**:181.88

Package Size

- **Length (in.)** :78.35
- **Width (in.)** :19.06
- **Height (in.)** :13.58
- **Weight (lbs.)**:199.52