# ASSEMBLY INSTRUCTIONS

## GOLD FULL BED

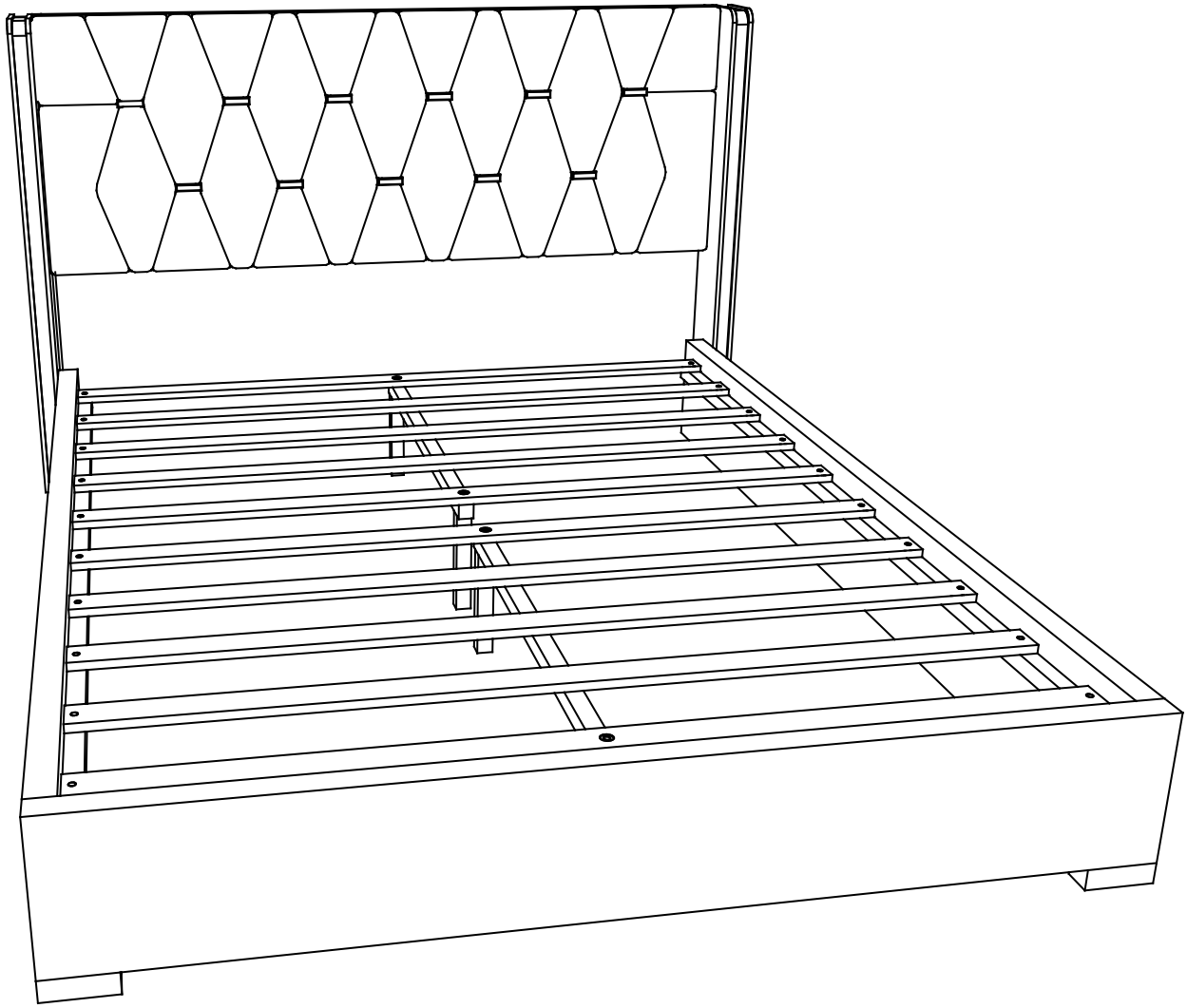

## WF319932 & WF319933

# Detail View

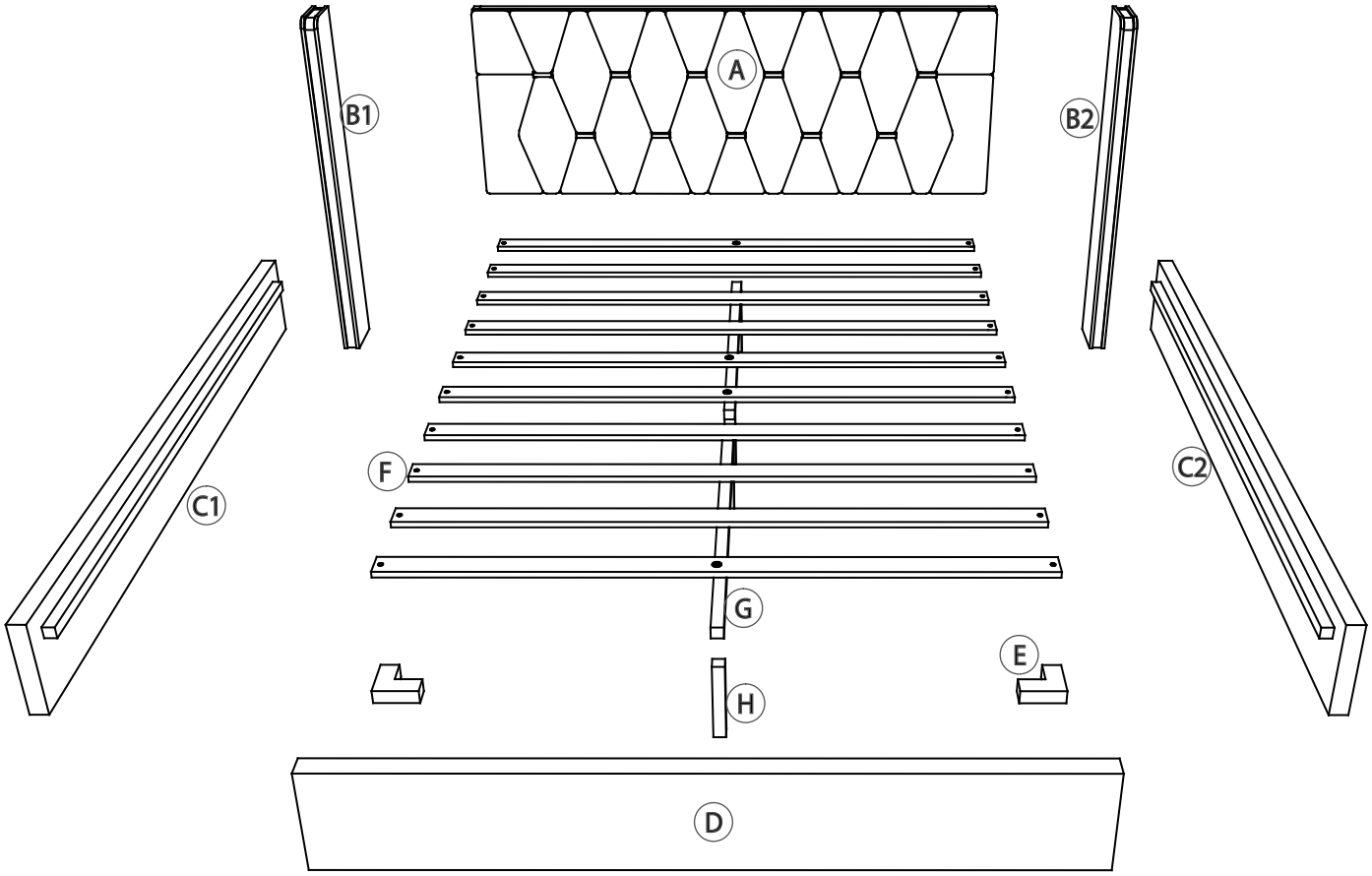

# Part List

**WF319932**

| | | |
|---|---|---|
| **A** 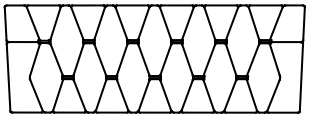 HEADBOARD - 1PC | **B1** LEFT HEADBOARD LEG - 1PC | **B2** RIGHT HEADBOARD LEG - 1PC |
| **D** 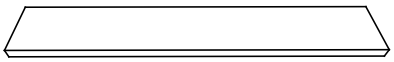 FOOTBOARD - 1PC | | |

# Part List

**WF319933**

| | | |
|---|---|---|
| **C1** 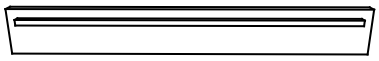 LEFT SIDE RAIL - 1PC | **C2** 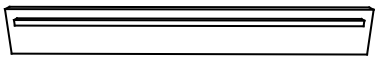 RIGHT SIDE RAIL - 1PC | **G** CENTER SUPPORT LEGS - 4PCS |
| **E** 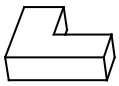 FOOTBOARD LEGS - 2PCS | **F** SLATS - 10PCS | **H** 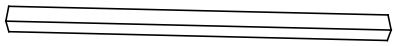 CENTER SUPPORT BAR - 1PC |

# Hardware List

**in WF319933**

| | | |
|---|---|---|
| **1** | **2** 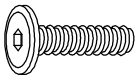 5/16”*45mm | **3** 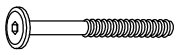 1/4"*60mm |
| Allen key (1pc) | Hex-Head bolts (8pcs) | Hex-Head bolts (4pcs) |
| **4** 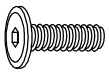 5/16”*25mm | **5** 5/16” | **6** 1/4” |
| Hex-Head bolts (4pcs) | Flat Washer (12pcs) | Flat Washer (4pcs) |
| **7** F4*35mm | | |
| Screw (24pcs) | | |
| | | |
| | | |

ASSEMBLY TOOLS REQUIRED ( NOT INCLUDED )

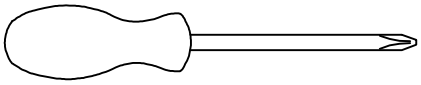

( Phillip head screwdriver )

DO NOT USE POWER TOOLS TO ASSEMBLE THIS PRODUCT !

## STEP 1:

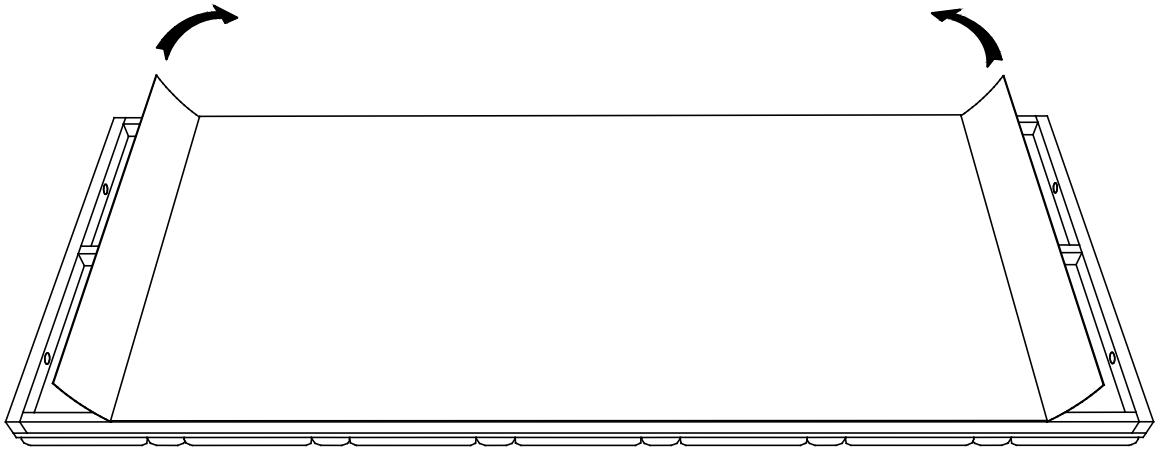

- Open both sides of the black non-woven fabric on HeadBoard (A).

## STEP 2:

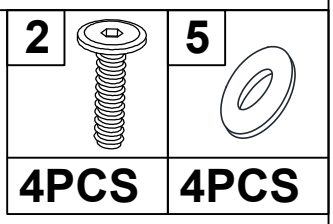


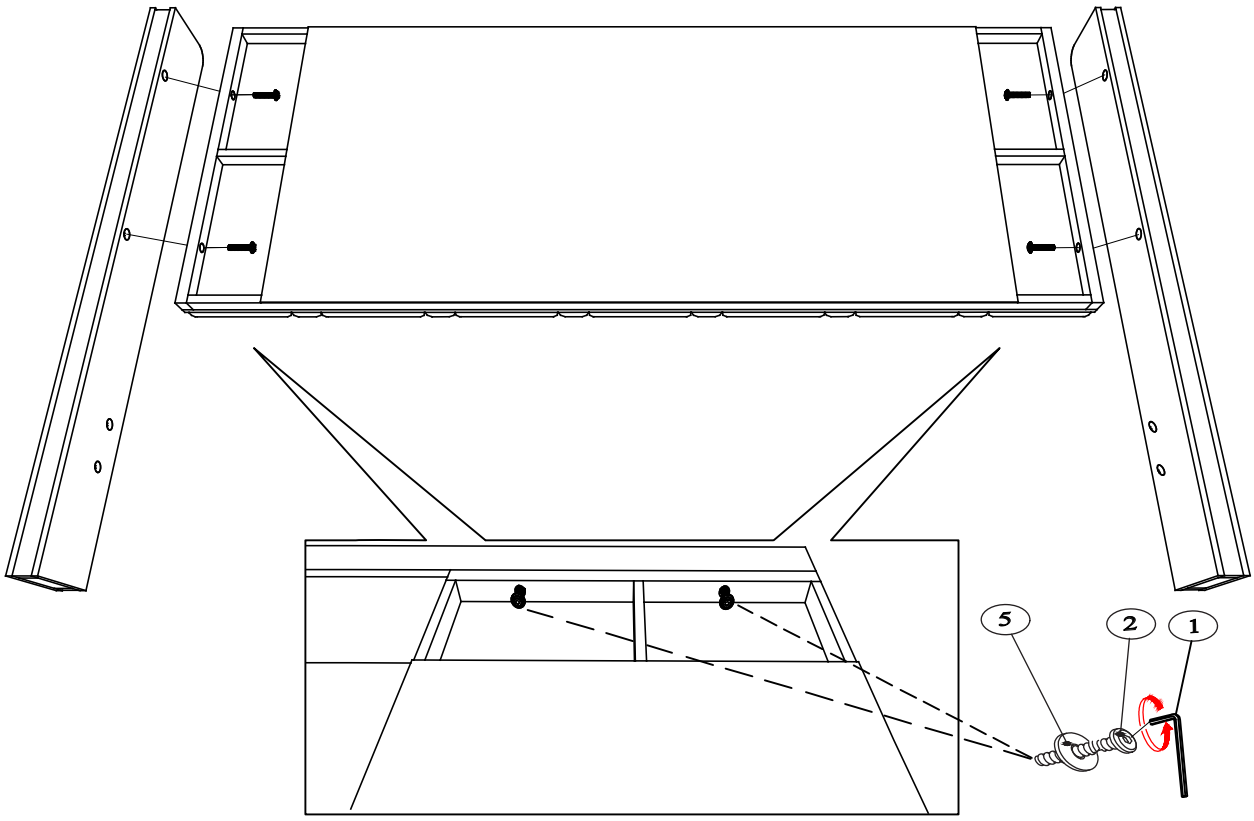


- Use Allen Key (1) to drive Bolt (2) fitted with Spring Washer (5) to install the Left & Right HeadBoard Leg (B1&B2) to the HeadBoard (A).

## STEP 3:

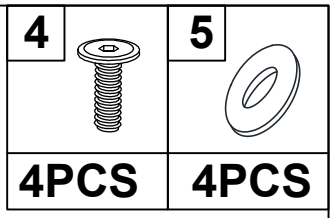


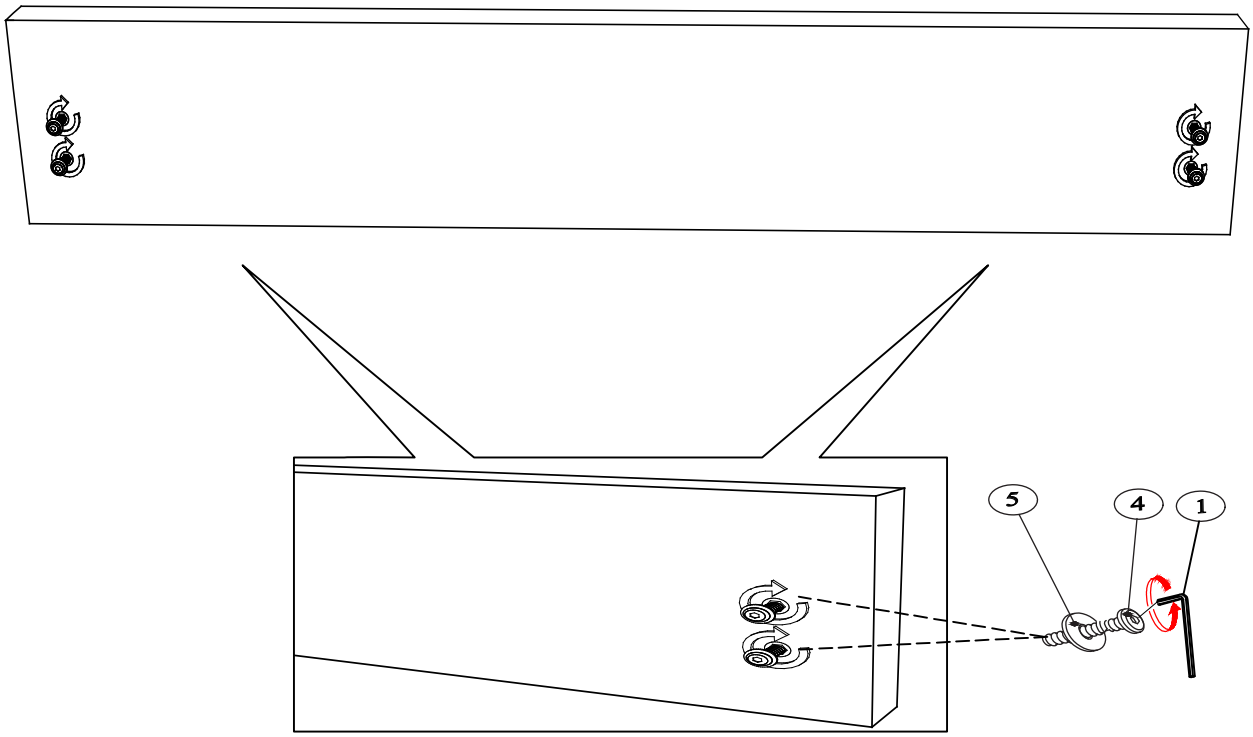


- Use Allen Key (1) to loosely (do not tighten) drive Bolt (4) with Spring Washer (5) onto the Footboard (D).

## STEP 4:

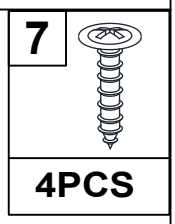


- Use the ScrewDriver to install the Screw (7) on FootBoard Leg (E) into the FootBoard (D).

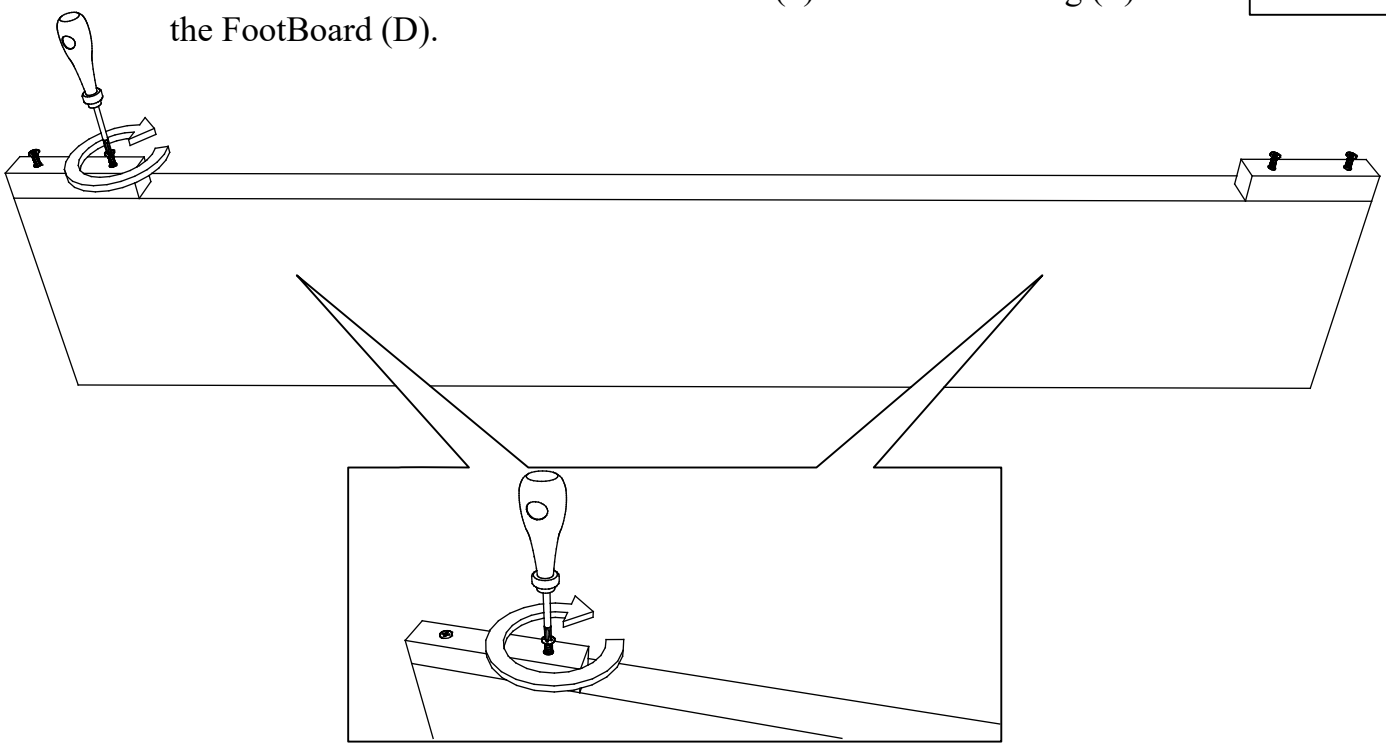

## STEP 5:

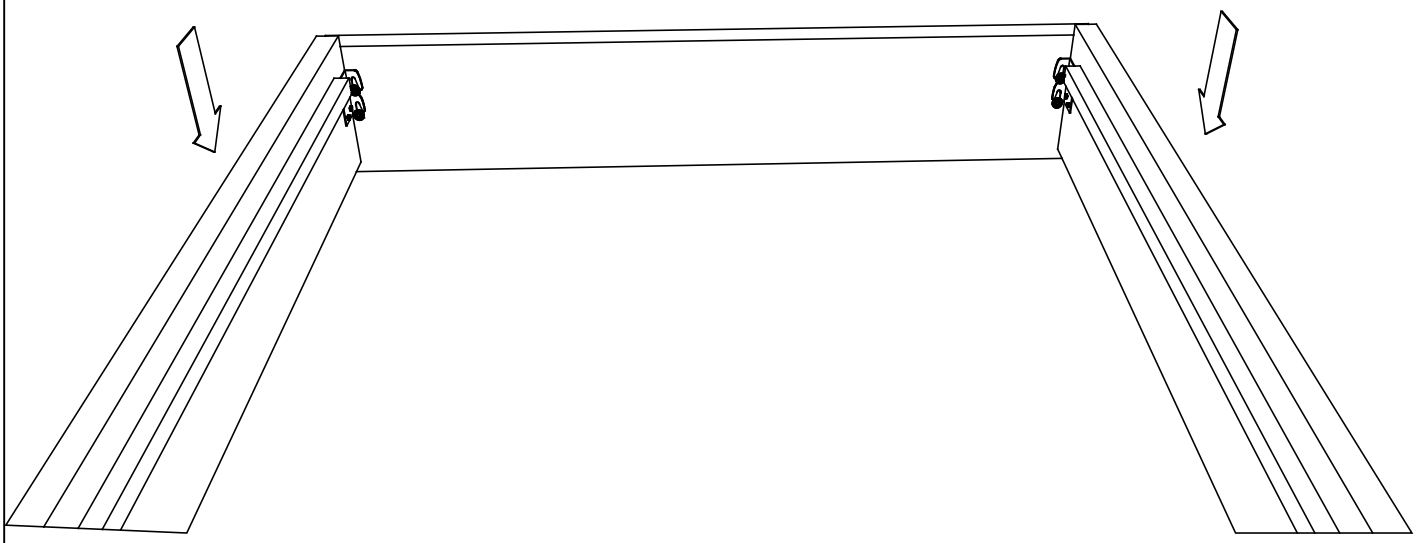

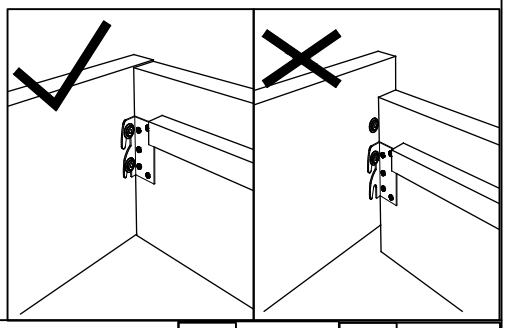

- Place the hook of Left&Right Side Rail (C1&C2) to Bolt (4) on Footboard (D). Then tighten the Bolt (4) fully.

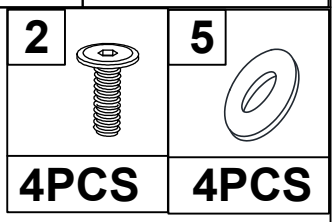


## STEP 6:

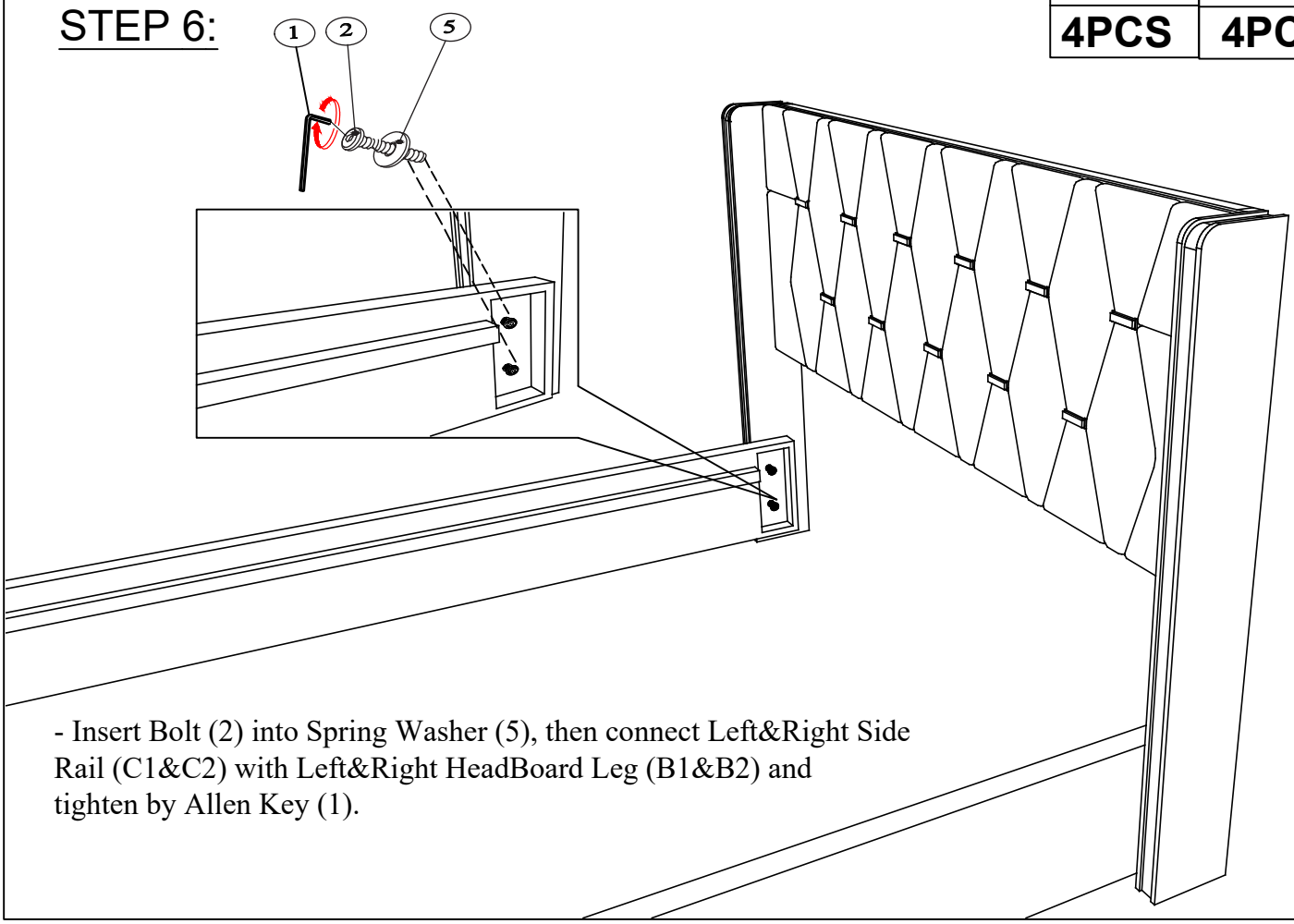


- Insert Bolt (2) into Spring Washer (5), then connect Left&Right Side Rail (C1&C2) with Left&Right HeadBoard Leg (B1&B2) and tighten by Allen Key (1).

## STEP 7:

| 3 | 6 | 7 |
|---|---|---|
| 4PCS | 4PCS | 20PCS |

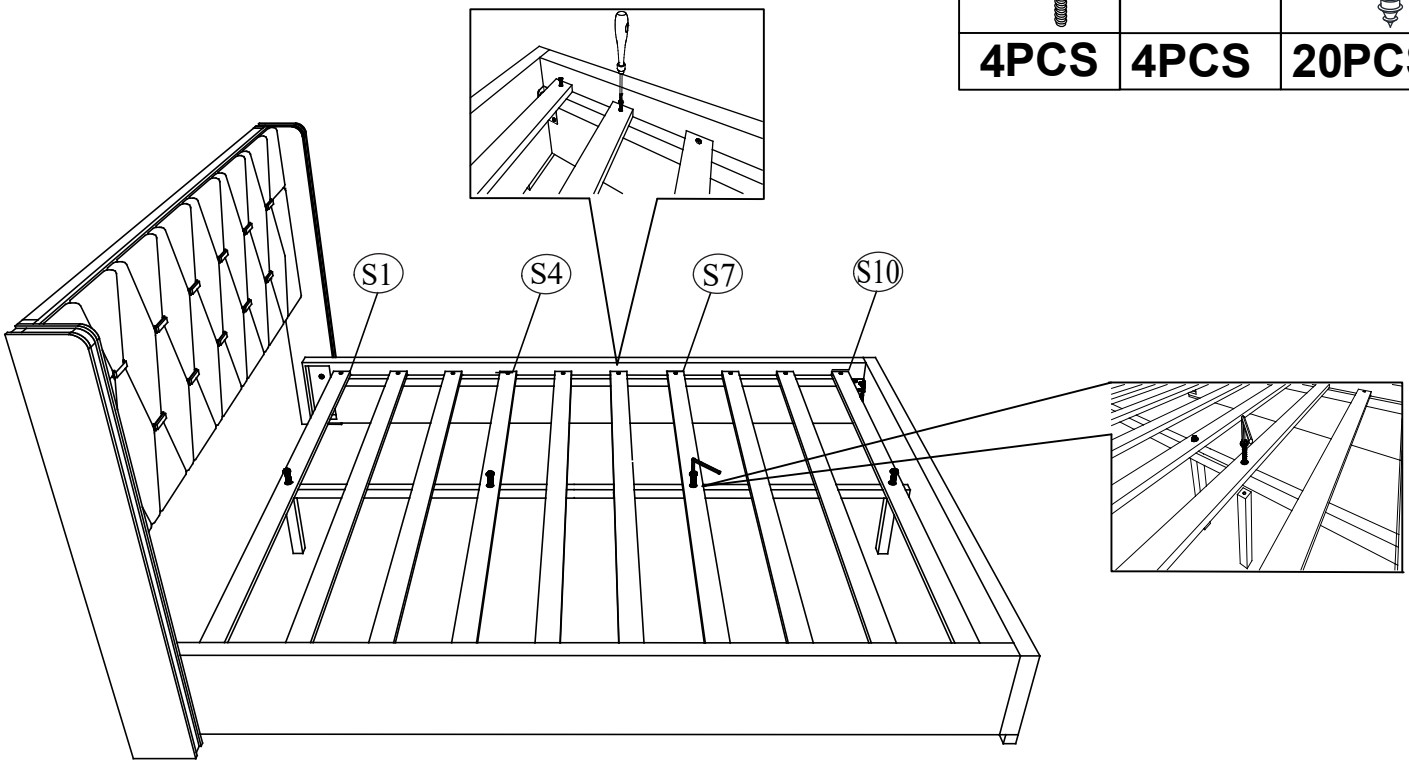


- Set Bolt (3) into Spring Washer (6), then pass assembled Bolts through Slat (S1,S4,S7,S10) and Center Support Bar (H) in turn, fit into Center Support Legs (G) then tighten with Allen Key (1).
- Use the ScrewDriver to install the Screw (7) into the hole on 2 heads of the Slat (F).

## STEP 8:

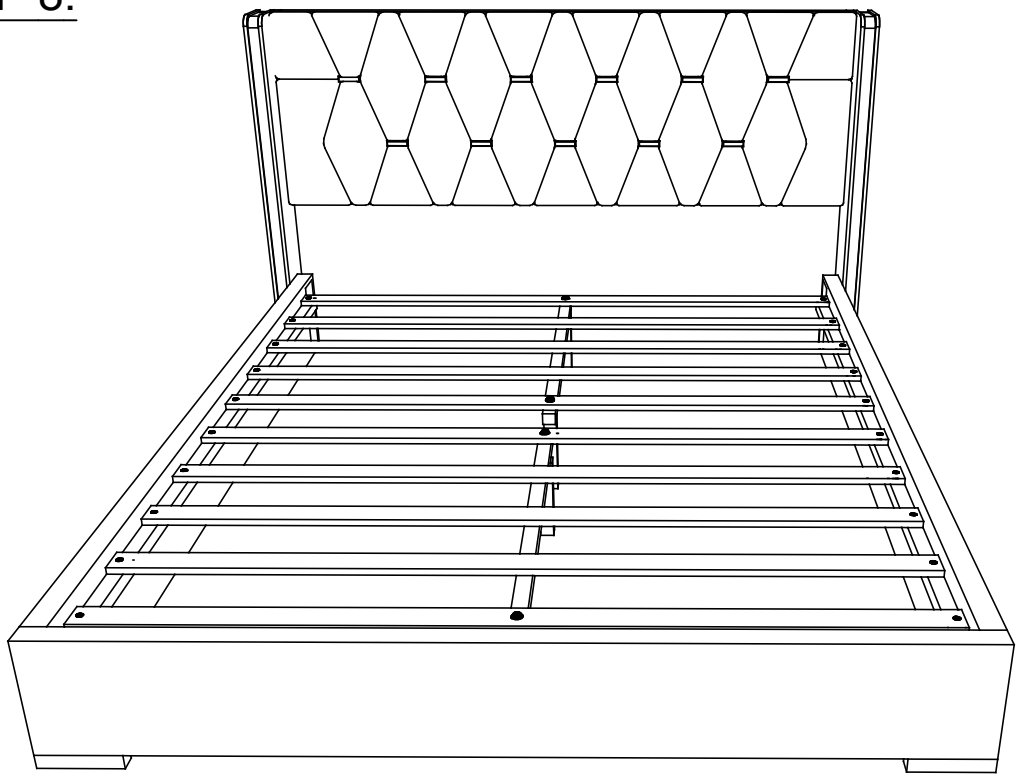

THE BED IS COMPLETE !