Model
AGV-CL065

AGV Lighting™

INSTRUCTION MANUAL

IMPORTANT: READ CAREFULLY AND KEEP.

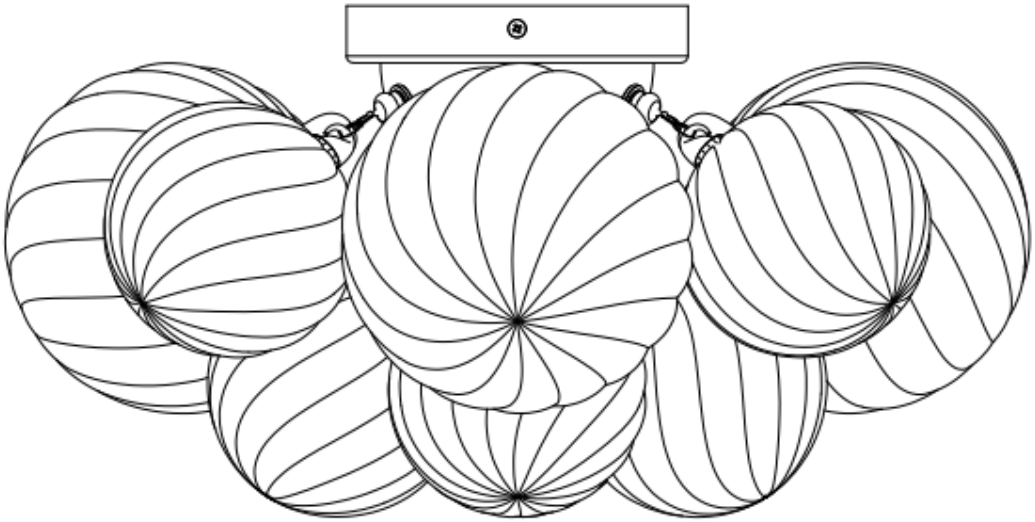

Customer service

Service@agv-lighting.com

Made in China

Residential use only

Indoor use only

PARTS LIST

Item	Drawing	Description	Quantity
A		Bubble Ball A	× 7
B	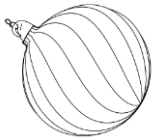	Bubble Ball B	× 3
C	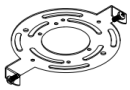	Mounting Bracket	× 1
D		Lamp Body	× 1
E		Wire Connector	× 3
F		Junction Box Screw	× 2
G		Gloves	× 2

WHAT TOOL YOU WILL NEED...



Safety goggles



Phillips screwdriver



Flathead screwdriver

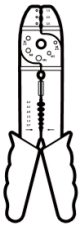

Wire strippers



Wire cutters



Ladder

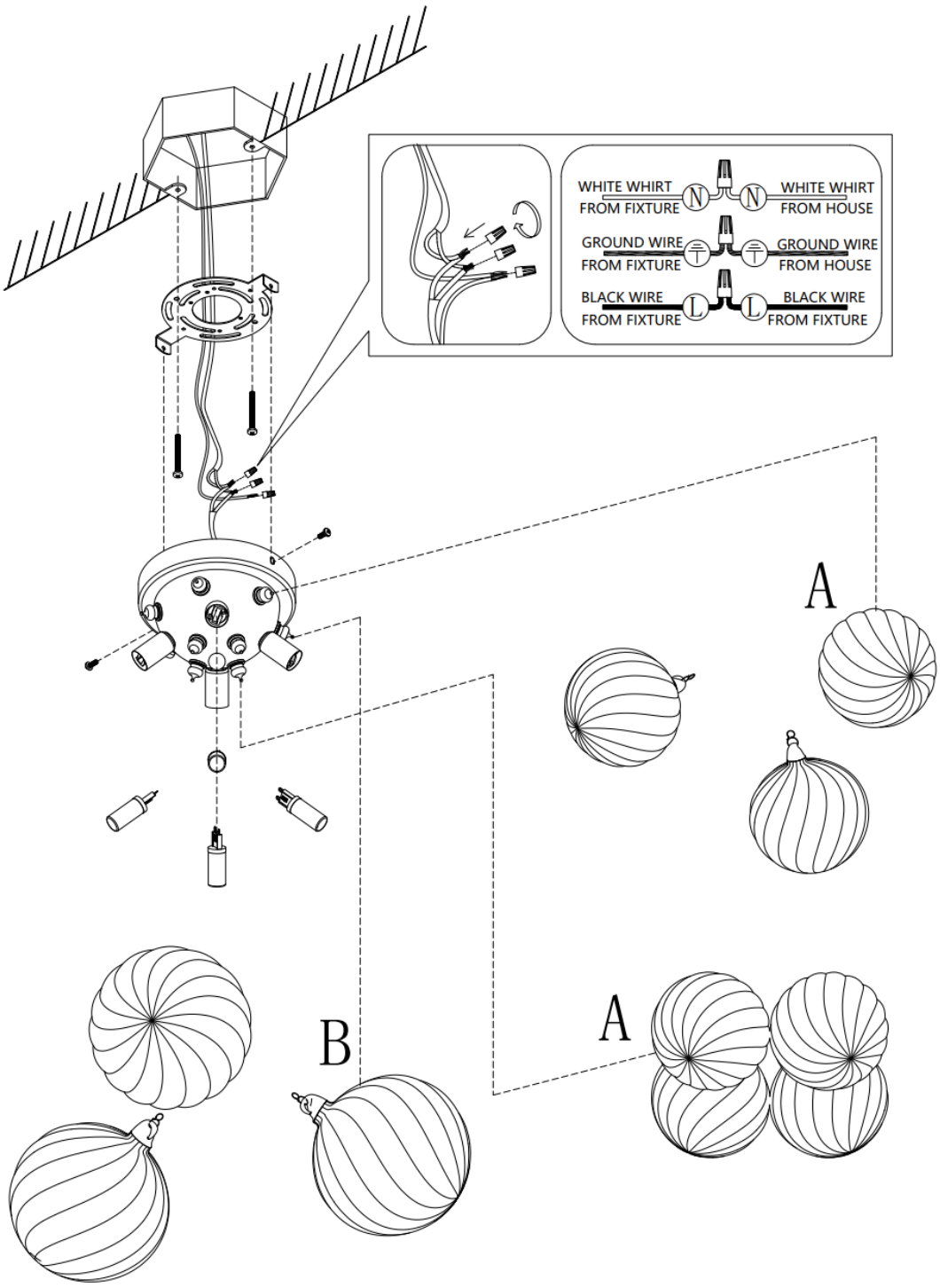
WHITE WHIRT
FROM FIXTURE
N
N
WHITE WHIRT
FROM HOUSE
GROUND WIRE
FROM FIXTURE
GROUND WIRE
FROM HOUSE
BLACK WIRE
FROM FIXTURE
L
L
BLACK WIRE
FROM FIXTURE
A
A
B

IMPORTANT

This warranty applies only to the original consumer purchaser and only to products used in normal use and service. If this product is found to be defective, the manufacturer's only obligation, and your exclusive remedy, is the repair or replacement of the product at the manufacturer's discretion, provided that the product has not been damaged through misuse, abuse, accident, modifications, alterations, neglect, or mishandling.

This warranty shall not apply to any product that is found to have been improperly installed, set-up, or used in any way not in accordance with the instructions supplied with the product.

This warranty shall not apply to a failure of the product as a result of an accident, misuse, abuse, negligence, alteration, faulty installation, or any other failure not relating to faulty material or workmanship.

The manufacturer does not warrant and specifically disclaims any warranty, whether express or implied, of fitness for a particular purpose, other than the warranty contained

herein. The manufacturer specifically disclaims any liability and shall not be liable for any consequential or incidental loss or damage, including but not limited to any labor / expense costs involved in the replacement or repair of said product.

Switch off the main electrical supply from the fuse box/circuit breaker before installing the unit or doing any maintenance.

Do not use outdoor.

WARNING:



Risk of electrical shock.

Turn off breaker at the panel.

INSTALLATION

WARNING: First of all, turn off the power at the main fuse box!

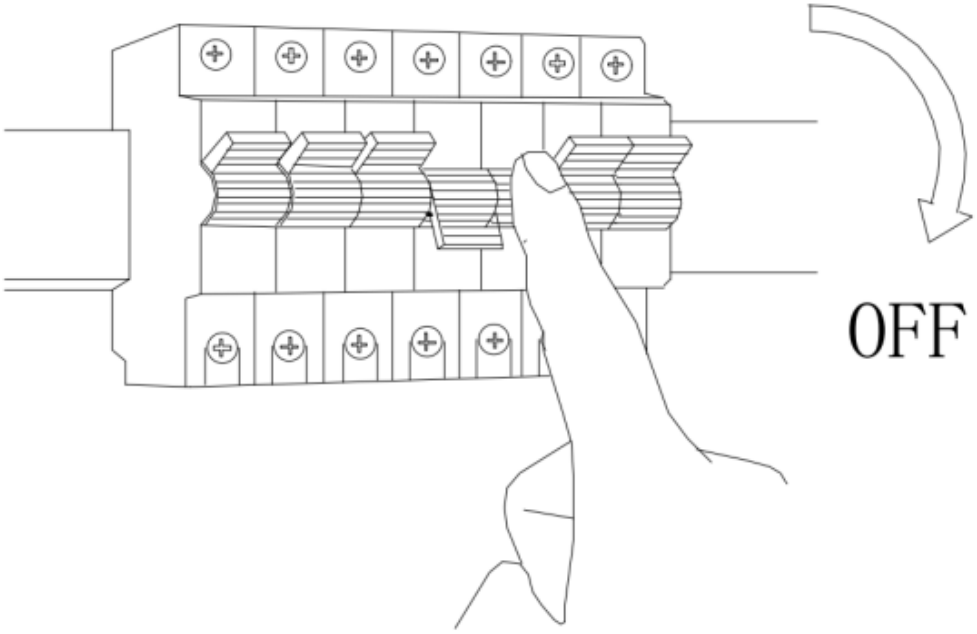

1. Screw the mounting bracket to the ceiling junction box.

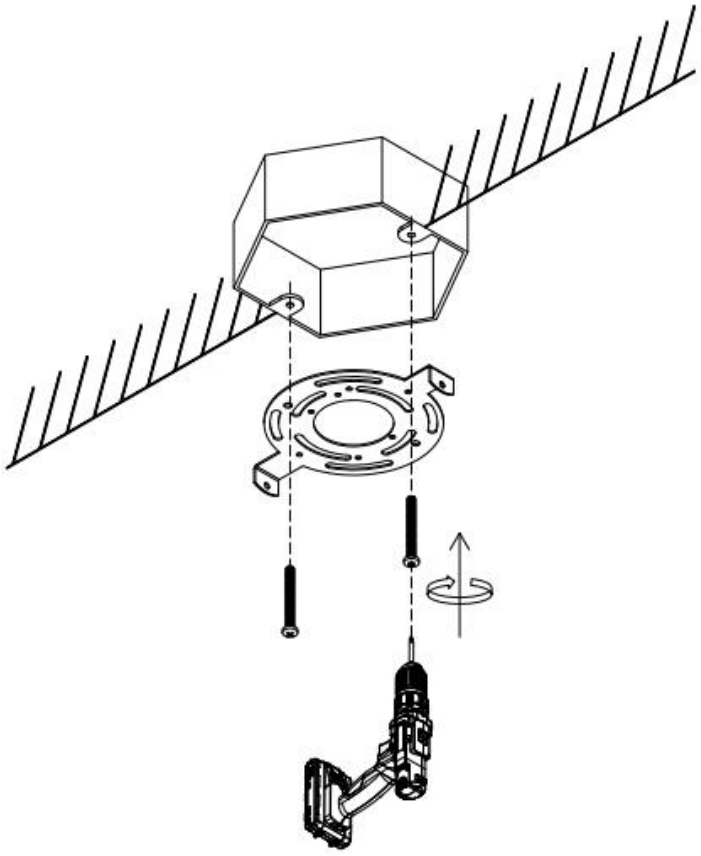

2. Connect the wires from lamp and ceiling together with wire connectors, and then screw the canopy to the mounting bracket with knobs.

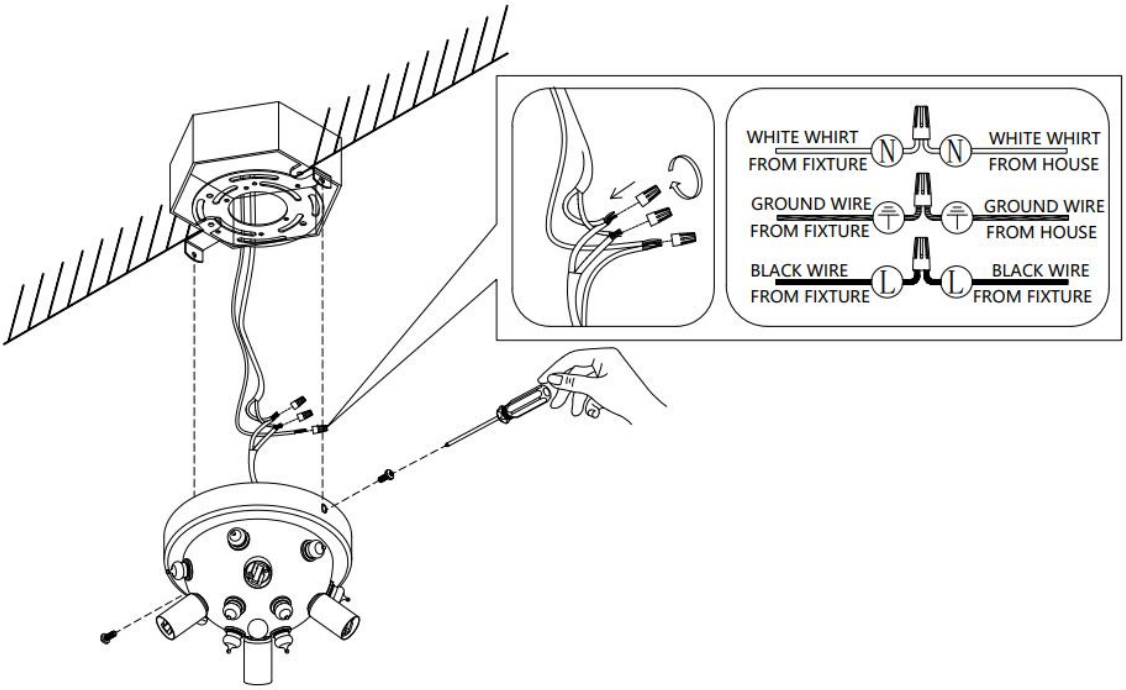

.

3. Install 4 x G9 bulb on, which are not included.

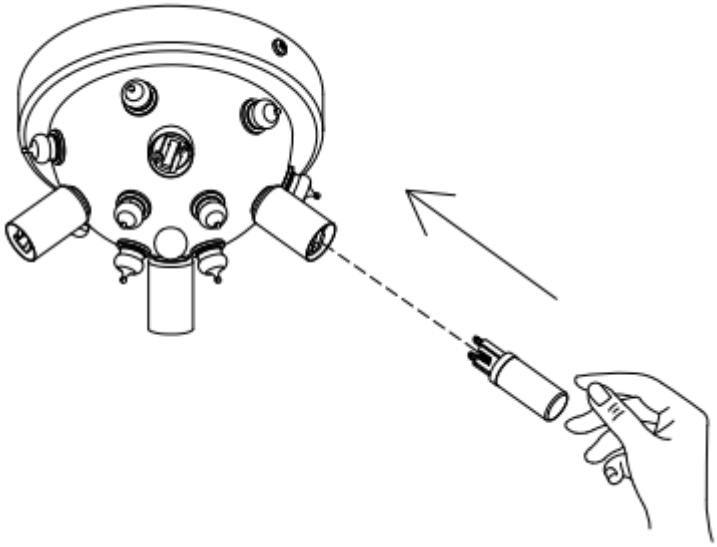

4. Hanging the bubble ball to the socket, order as below pic.

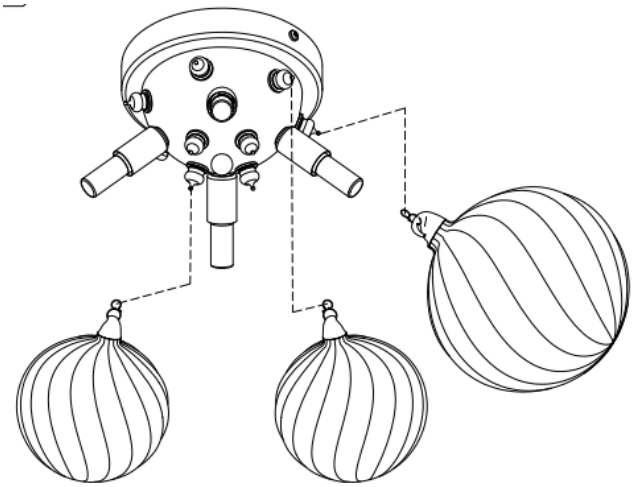

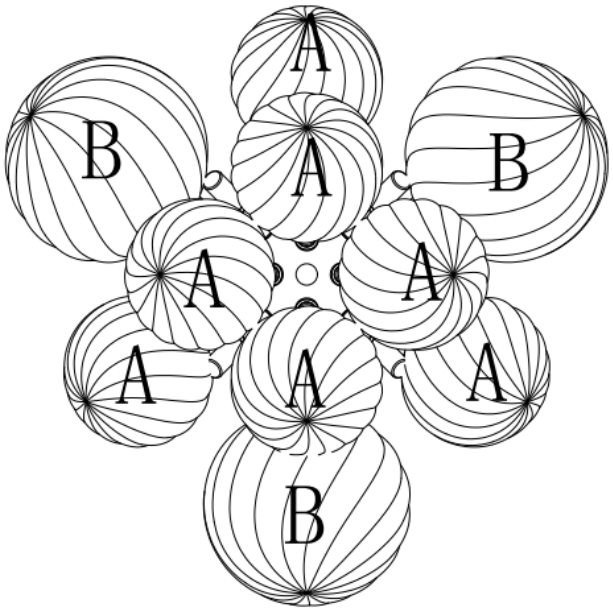

If you need any help !

Please contact our customer service for any questions!

Our Service Email:

Service@agv-lighting.com

You can also access Amazon Buyer Messaging Service for your convenience.
Log into your Amazon.com account and go to Message center. You can send message to our customer service directly.

If you are happy with our product, pls tell your friends and family about us. Spreading the words gives us the opportunity to make more people happy!

Thank you !

AGV LIGHTING

Brighten Your Style