ASSEMBLY INSTRUCTIONS

RATTAN BAR SET

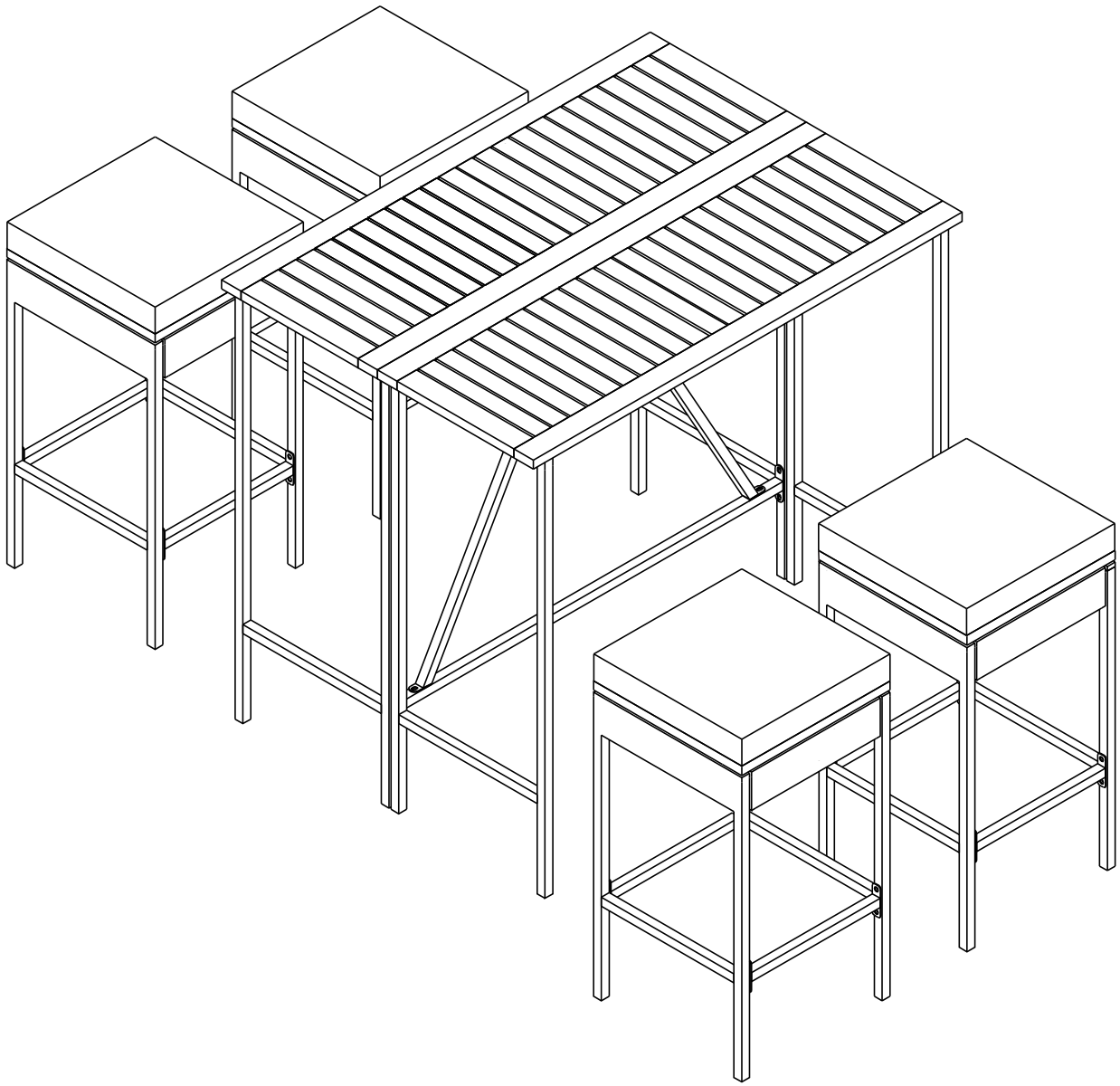

NOTE: 50% TIGHTEN BEFORE FIXING ALL BOLTS

1 x Table

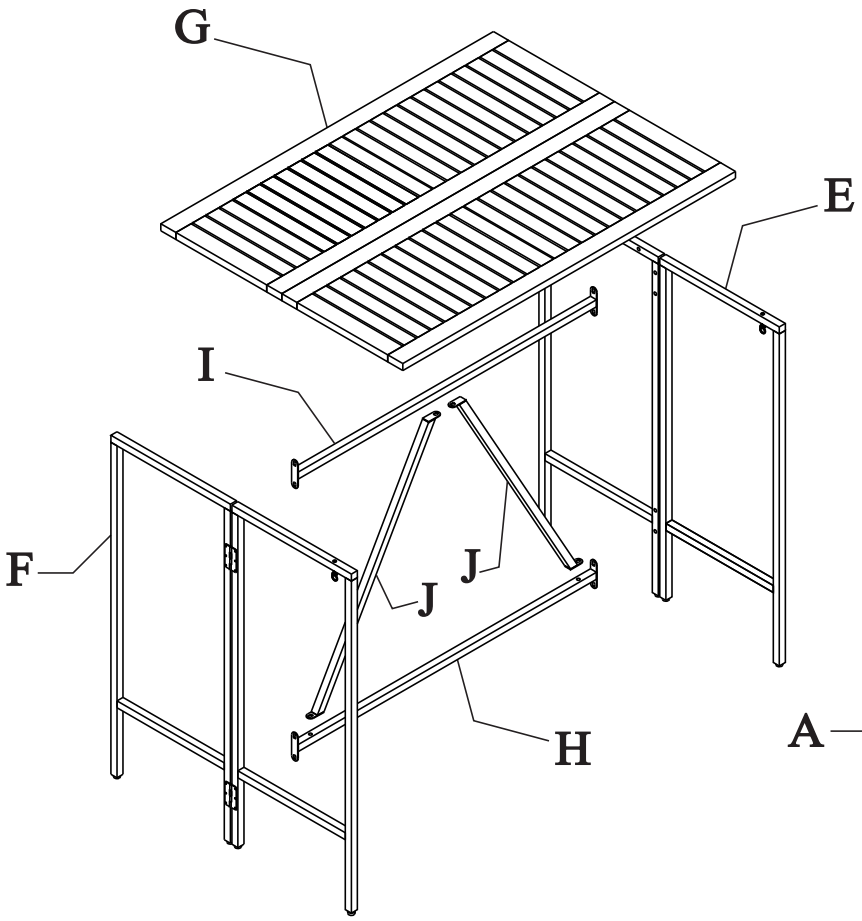

4 x Chair

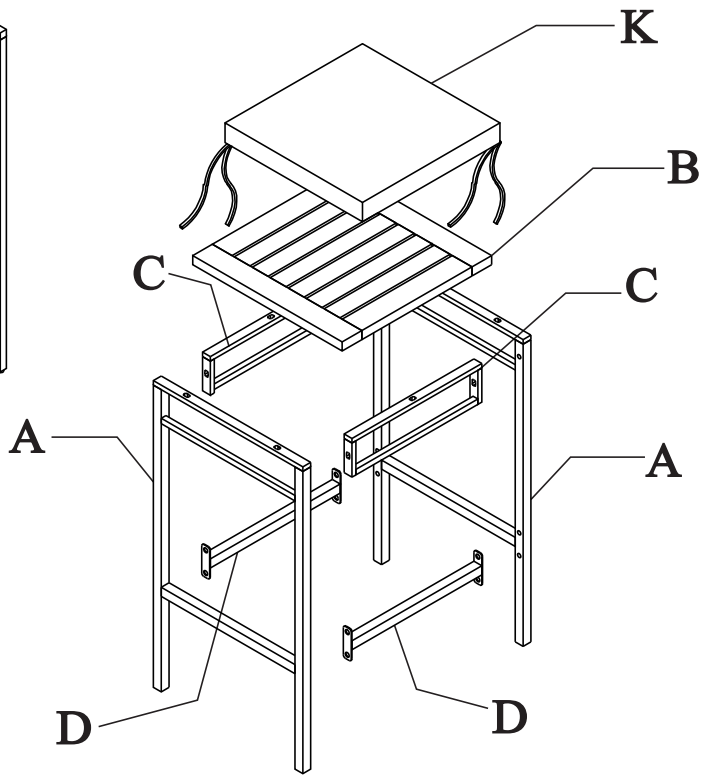

Notice :

1. 50% Tighten before fixing all screws, Allen wrench is recommended instead of an electric drill.
2. Place the item on a flat ground to adjust and make sure it remains stable.
3. Tighten up all screws with tools gradualy.
4. If the screws are not aligned with holes during assembly, please loosen all the other screws to 50% and continue the assembly process.
5. If the item is not stable, please loosen all the screws, adjust it on a flat ground and tighten up all screws again.
6. Note: If one or some screws are fully tightened during assembly, chances are the others will not be aligned with holes. In addition, all the holes are designed to be relatively larger to provide more space for the adjustment of the screws.

Part List

A 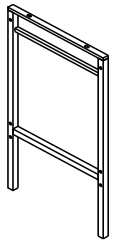 Chair Leg Frame (8pcs)	B 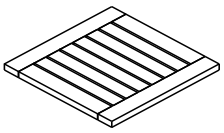 Wood Chair Seat (4pcs)	C 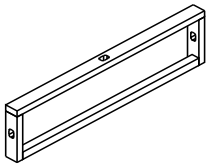 Chair Side Frame (8pcs)
D 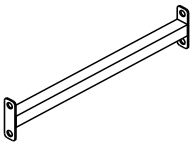 Mid Chair Frame (8pcs)	E 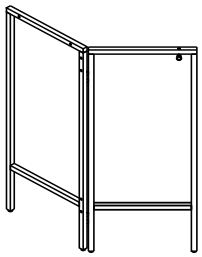 Table Leg Frame E (1pc)	F 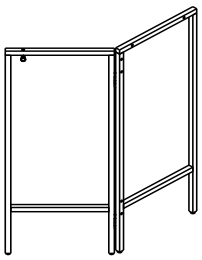 Table Leg Frame F (1pc)
G 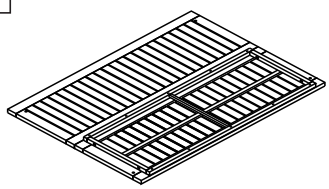 Wood Table Top (1pc)	H 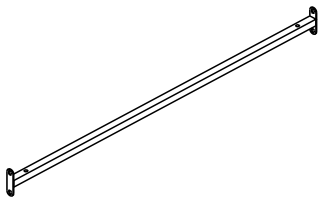 Mid Table Frame H (1pc)	I 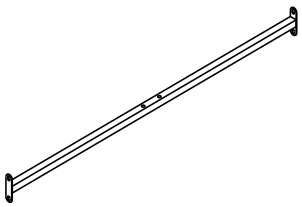 Mid Table Frame I (1pc)
J  Short Mid Table Frame (2pcs)	K 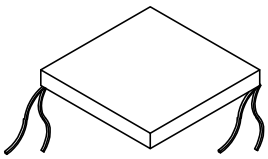 Seat Cushion (4pcs)	

Hardware List

1 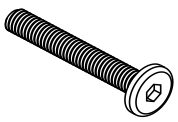 Bolt M6 x 40mm 4 pcs + extra 1 pc	2 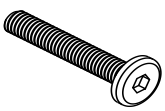 Bolt M6 x 30mm 16 pcs + extra 2 pcs	3 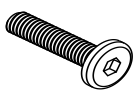 Bolt M6 x 25mm 24 pcs + extra 2 pcs
4 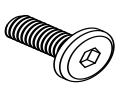 Bolt M6 x 15mm 44pcs + extra 3 pcs	5 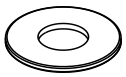 W6 x 1 Washers 88pcs + extra 3 pcs	6 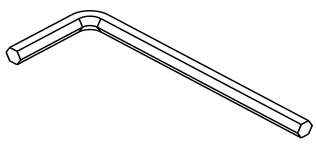 Allen key M4 (2 pcs)

STEP 1(4 x Chairs assembly)

Connect Chair Leg Frame (A) & Chair Side Frame (C) with Bolt (2) & Washers (5)

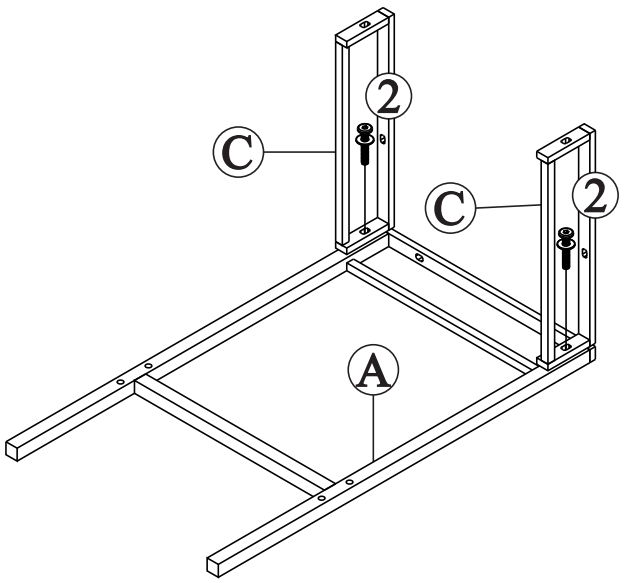

STEP 2

Connect Part from STEP 1 & Mid Chair Frame (D) with Bolt (4) & Washers (5)

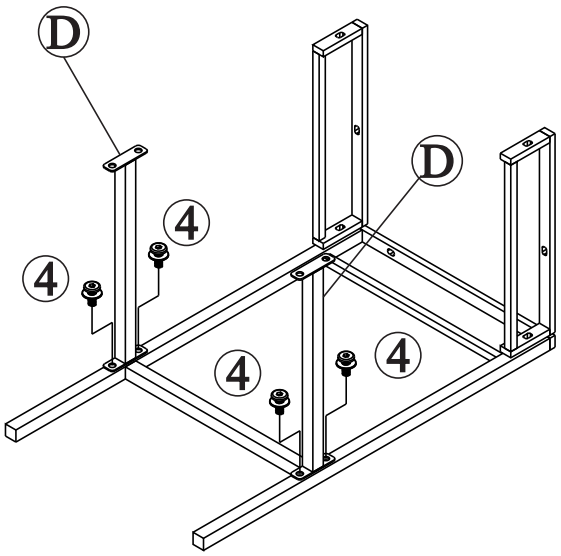

STEP 3

Connect Part from STEP 2 & Chair Leg Frame (A) with Bolt (2),(4) & Washers (5)

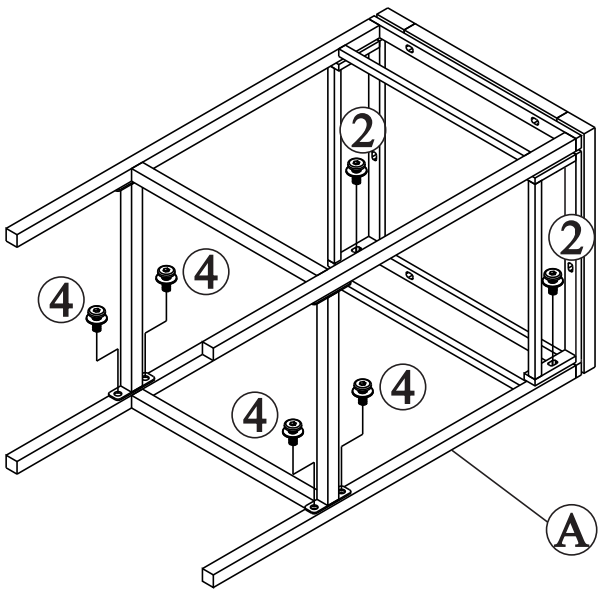

STEP 4

Connect Part from STEP 3 & Wood Chair Seat (B) with Bolt (3) & Washers (5)

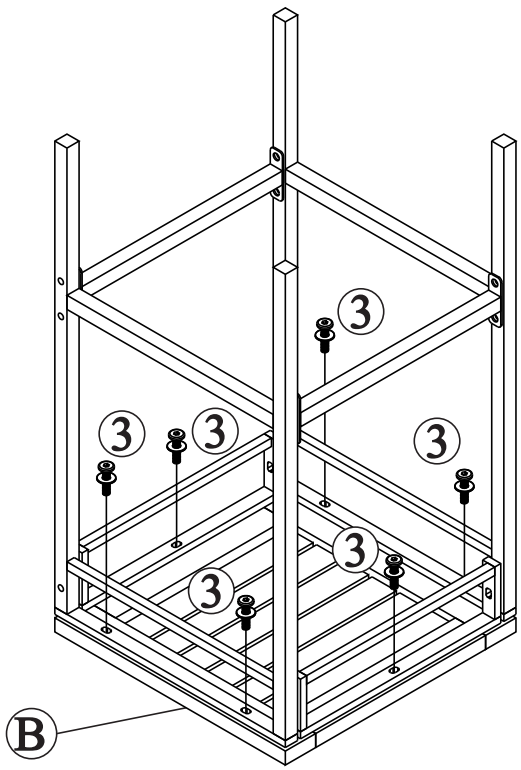

STEP 5

Put on Seat Cushion (K) to complete Chair

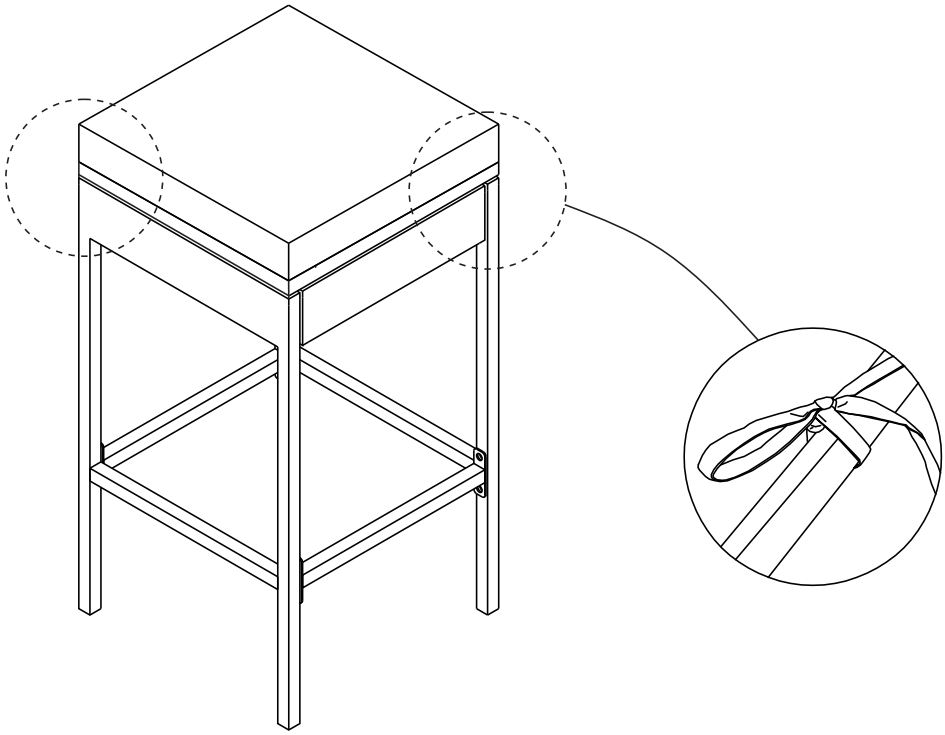

STEP 6 (1 x Table assembly)

Connect Table Leg Frame (E),(F) & Wood Table Top (G) with Bolt (1) & Washers (5)

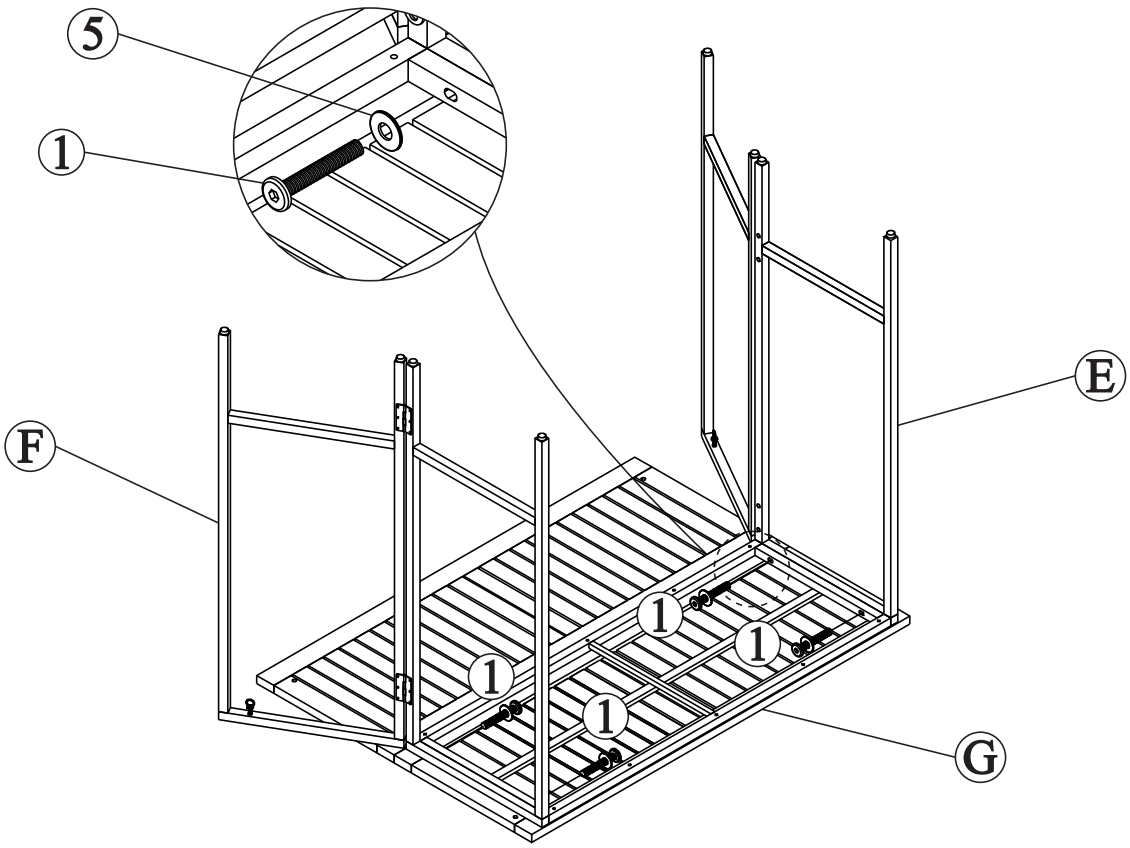

STEP 7

Connect Part from STEP 6 & Mid Table Frame (H),(I) with Bolt (4) & Washers (5)

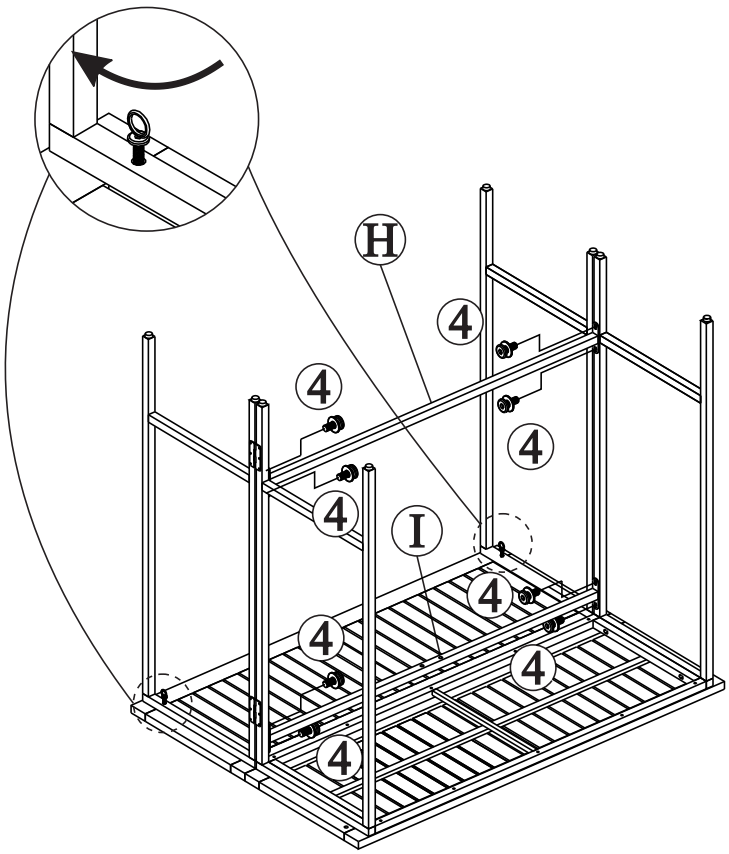

STEP 8

Connect Part from STEP 7 & Short Mid Table Frame (J) with Bolt (4) & Washers (5)

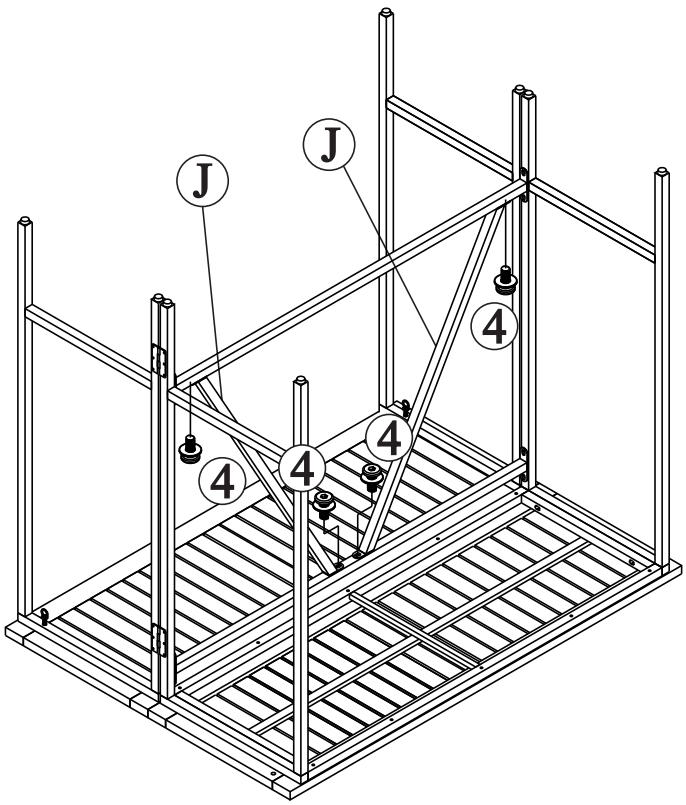

STEP 9

The Table Top can be folded and opened with many options

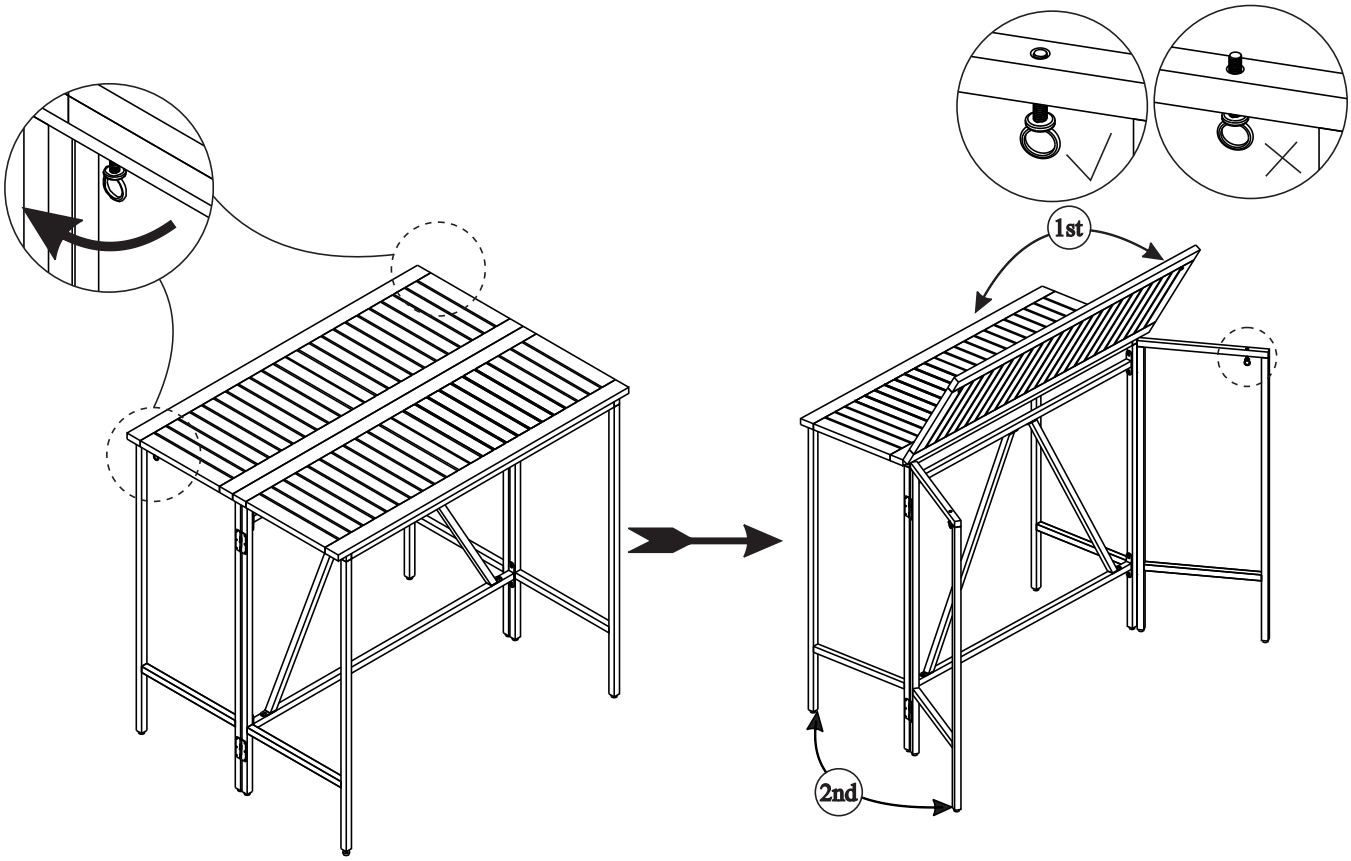

STEP 10

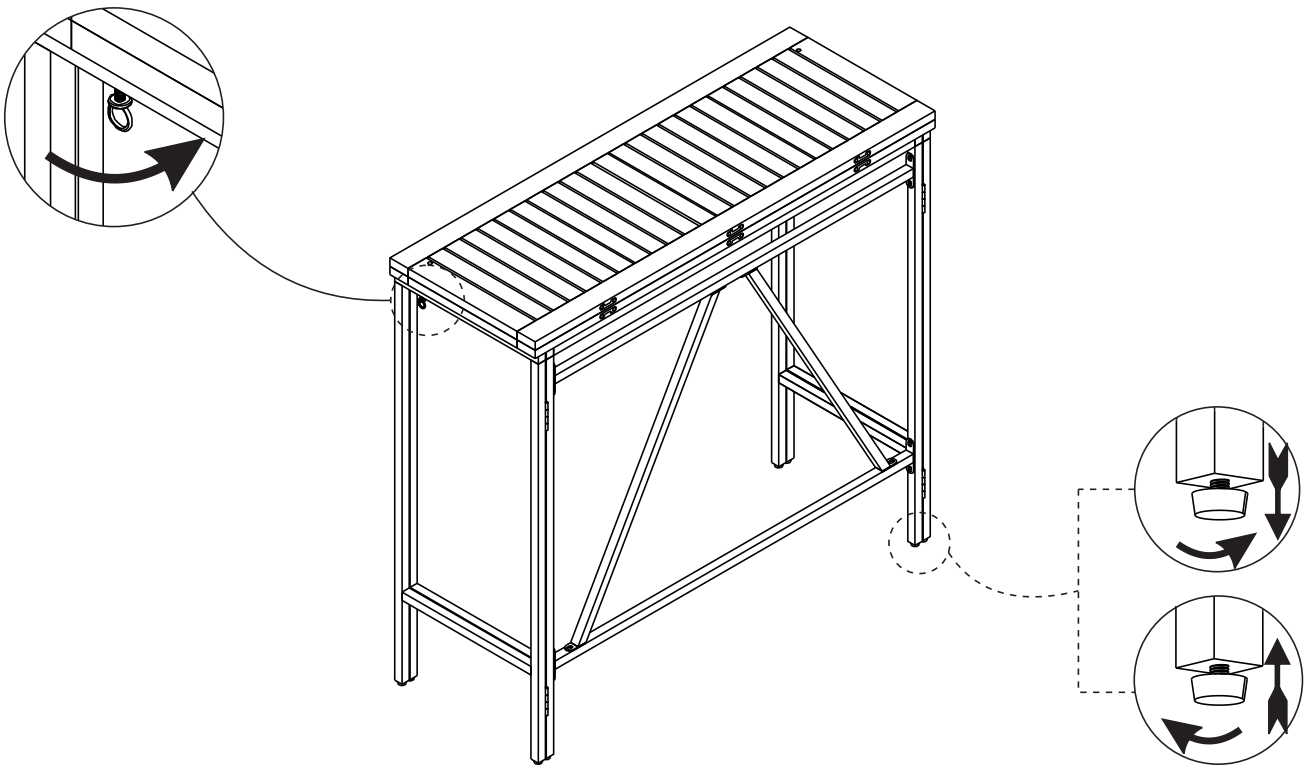

Adjustable leg pads

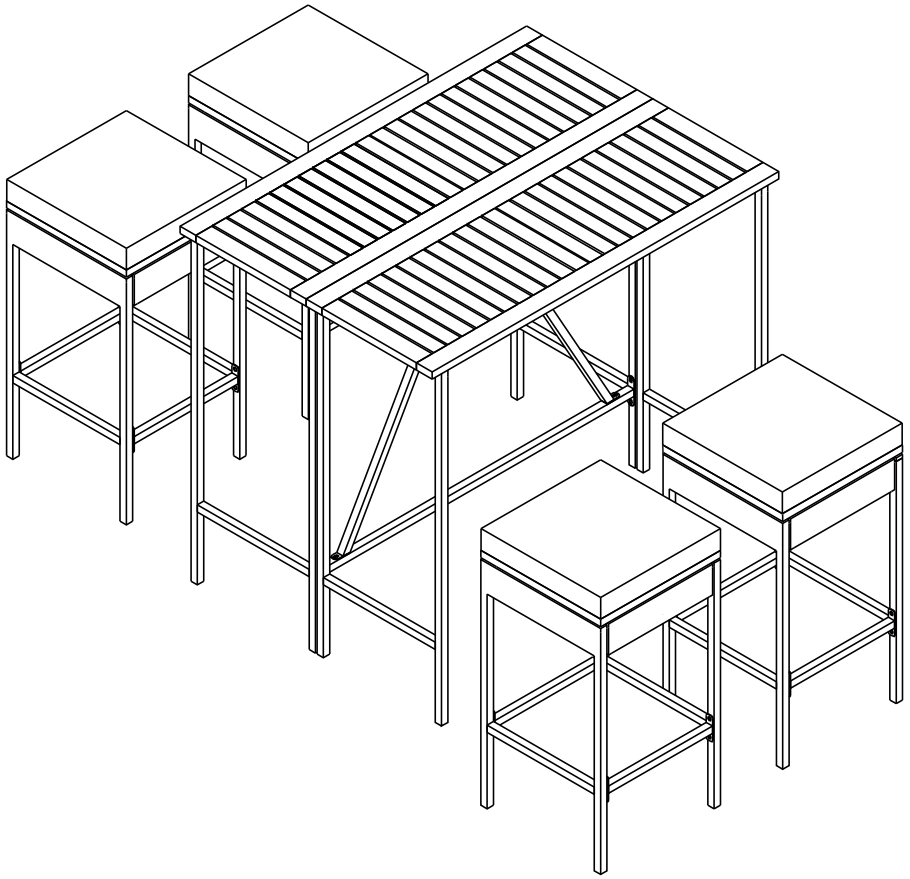

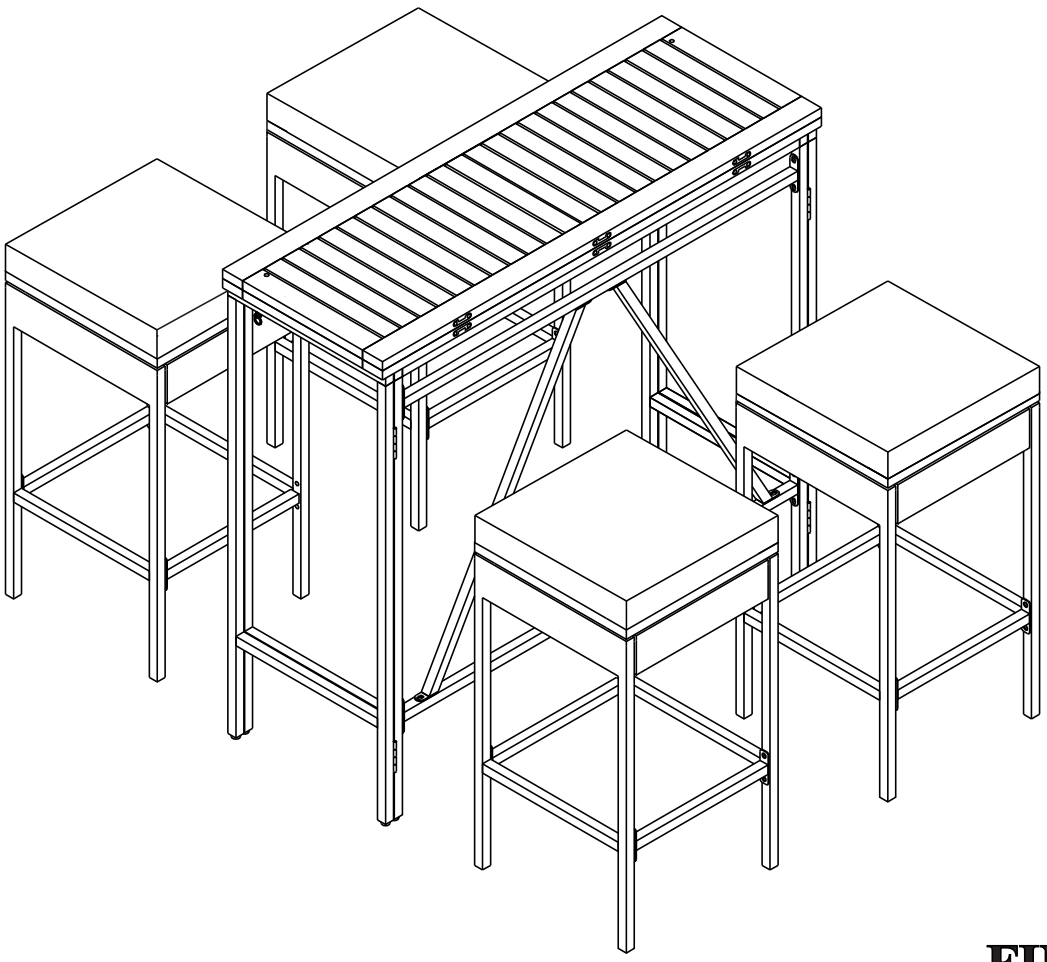

FINISH