ASSEMBLY INSTRUCTIONS

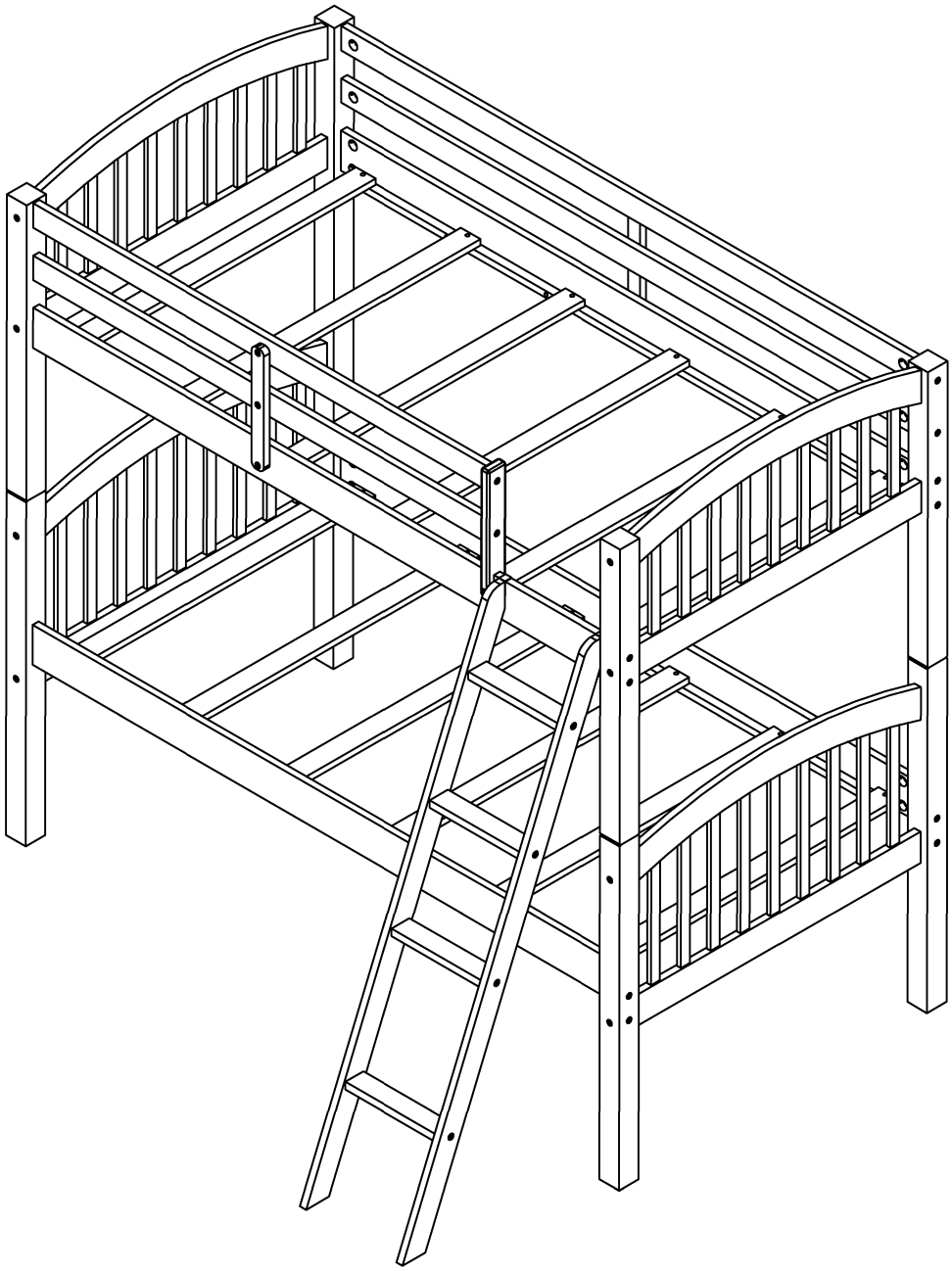

Description : Twin Bunk Bed
Dimension : 2060 x 1590 x 1587 Hmm

BEFORE ASSEMBLY

Thank you for purchasing this quality product. This product has been designed for easy assembly and constructed for durability. Please take the time to read and follow the assembly instructions carefully.

Be sure to check all packing material carefully for small parts which may have come loose inside the carton during shipment. Please separate, identify, and count all parts and metal hardware. Compare with part list to be sure all parts are present.
If hardware is missing or you have difficulty assembling this product, please call for us.

IMPORTANT NOTE:

- Place all wooden parts on a clean and smooth surface such as a rug or carpet to avoid the parts from being scratched.
- Remove all wrapping material, including staples & packing straps before you start to assemble.
- DO NOT tighten all screws and bolts until completely assembled.
- Keep all hardware parts out of reach of children.

PART LIST

NO	Description	Q'Ty	Sketch	NO	Description	Q'Ty	Sketch
BOX A : A +B+C+D+ M+N							
A	Upper left post	2	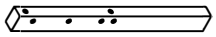	B	Upper right post	1	
C	Upper right post	1		M	Lower right post	2	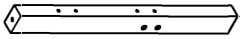
D	Head/foot board	4	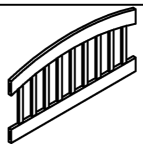	N	Lower left post	2	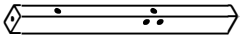
BOX B : E+F+G+H+J+K+L+P+R+S+T							
E	Upper back side rail	1	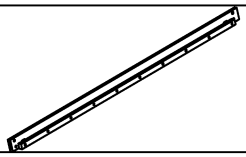	F	Upper front side rail	1	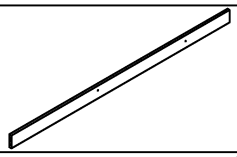
G	Slats	12		H	Front guard rail	2	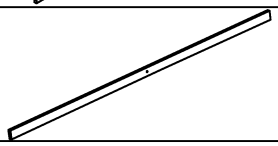
J	Back guard rail	2	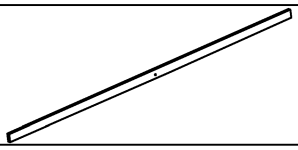	K	Guard rail support	2	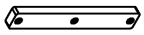
L	Head Guard rail bar	1		P	Lower side rail	2	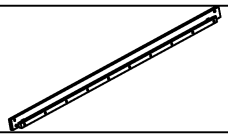
R	Ladder rungs	4	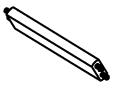	S	Left ladder	1	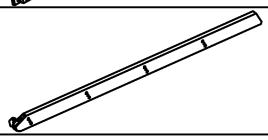
T	Right ladder	1	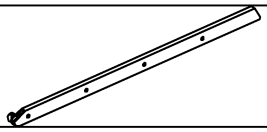				

HARDWARE LIST

NO	Description	Q'Ty	Sketch	NO	Description	Q'Ty	Sketch
1	Head hex bolts 1/4" x 100mm	22		2	Head hex screws M7 x 30mm	8	
3	Head hex screws M7 x 50mm	8		4	Head hex bolts 1/4" x 65mm	2	
5	Wood dowels ø8 x 30mm	64		6	Dowel nuts 1/4"xø10x12mm	24	
7	Wood dowels ø15 x L90mm	4		8	Wood screws M4 x 35mm	24	
9	Wood screws M4 x 15mm	2		10	Alenkey 4mm	1	
11	Head hex bolts 1/4" x 85mm	16		12	Hooks bracket	2	

Upper Post x 4

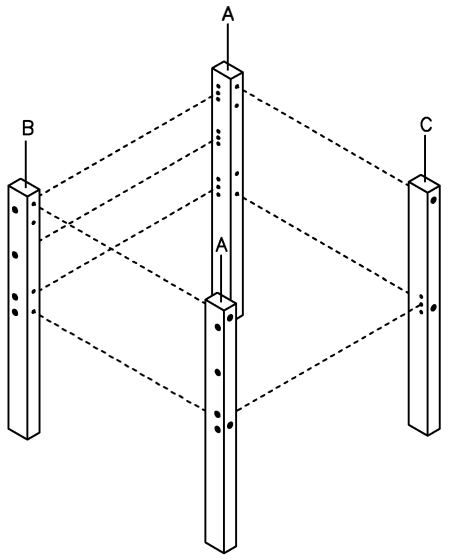

Lower Post x 4

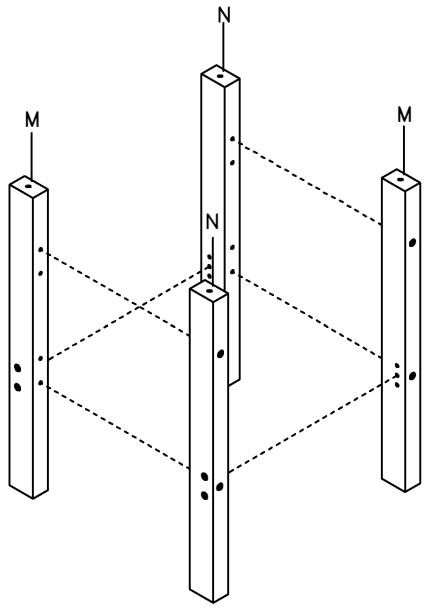

A – Left Front & Right Back Upper Post x 2
B – Left back Upper Post x 1
C – Right Front Upper Post x 1

M – Left Back & Right Front Lower Post x 2
N – Left Front & Right Back Lower Post x 2

Twin Bunk Bed

STEP 1 : Asembly head/foot assy

LOWER BUNK ASSEMBLY : Use alenkey (10) assembly head board & foot board (D) with lower post (M&N) by bolts (11).

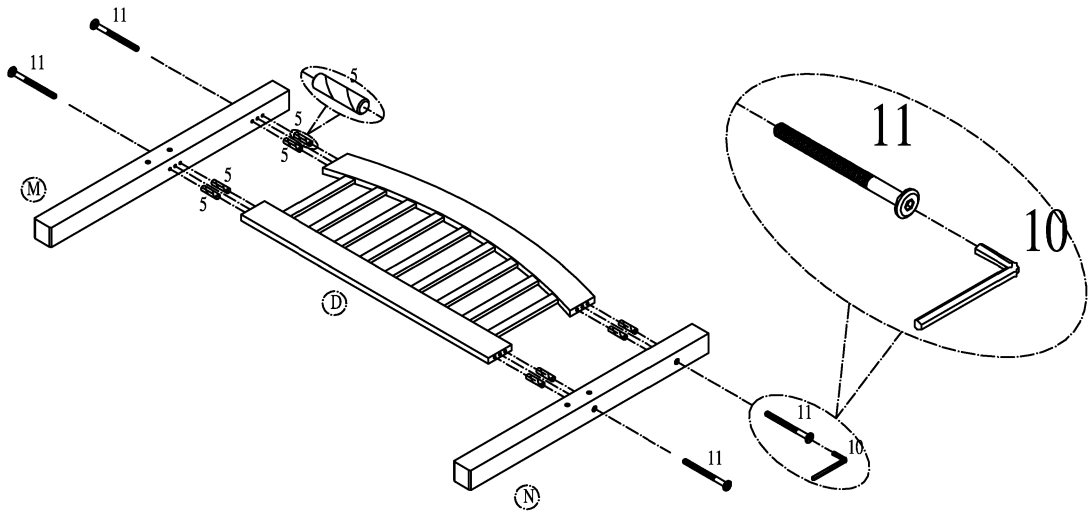

STEP 2 : Lower bed assembly

LOWER BUNK ASSEMBLY : Use alenkey (10) assembly lower head board assy with lower side rails (P) by bolts (1) & nuts (6)

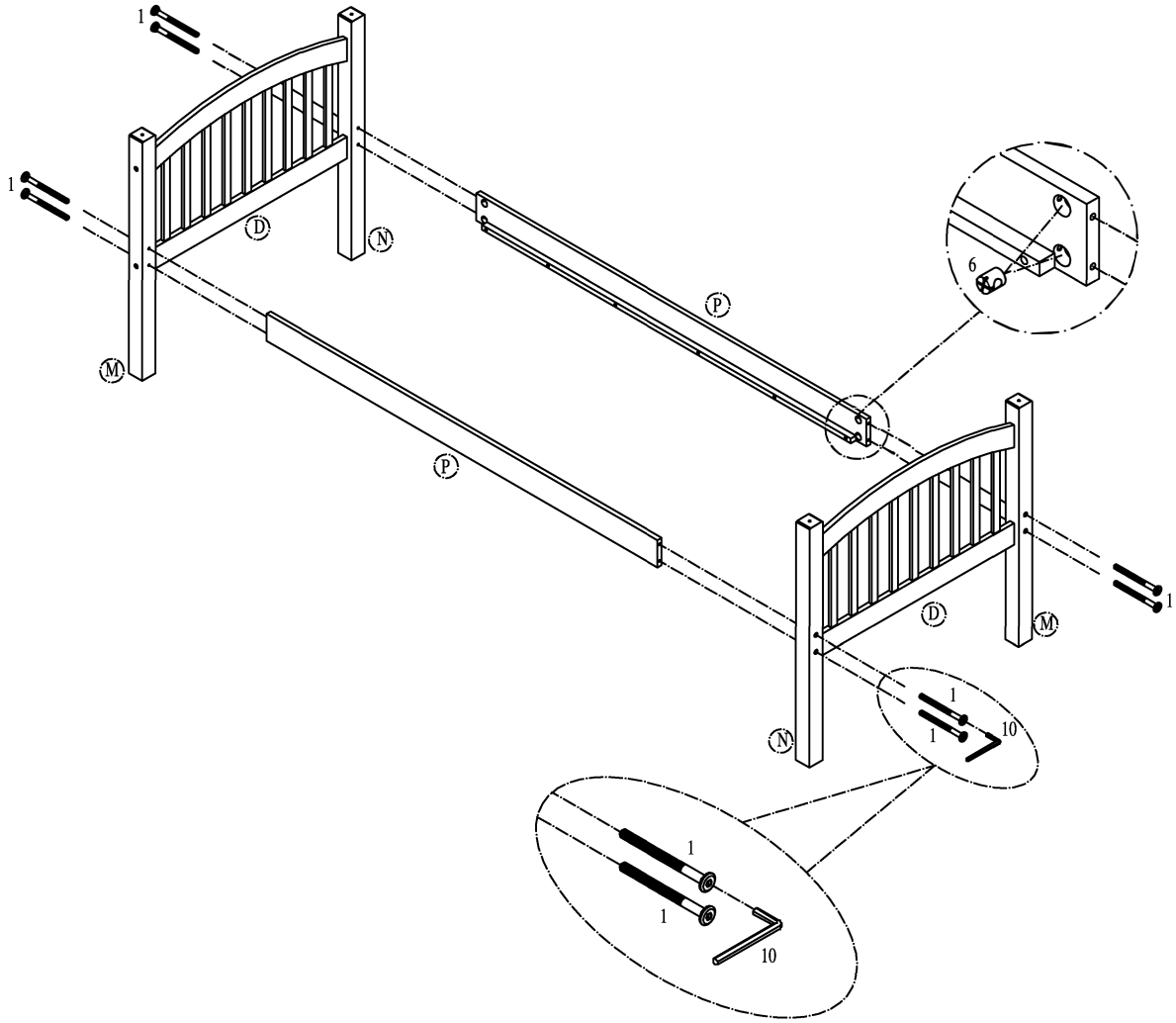

Twin Bunk Bed

STEP 3 : Fix slats

LOWER BUNK ASSEMBLY : Use screwdriver fix each slats (G) with lower side rails (P) by screws (8)

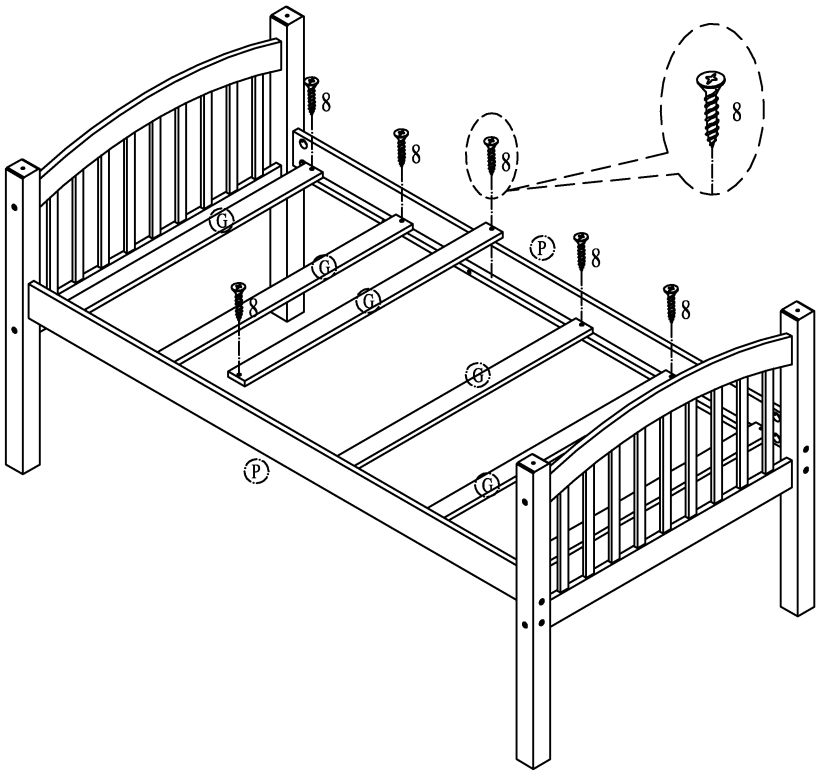

STEP 4 : Assembly head/foot upper assy

UPPER BUNK ASSEMBLY : Use alenkey (10) assembly head board & foot board (D) with upper post (A,B&C) by bolts (11) .

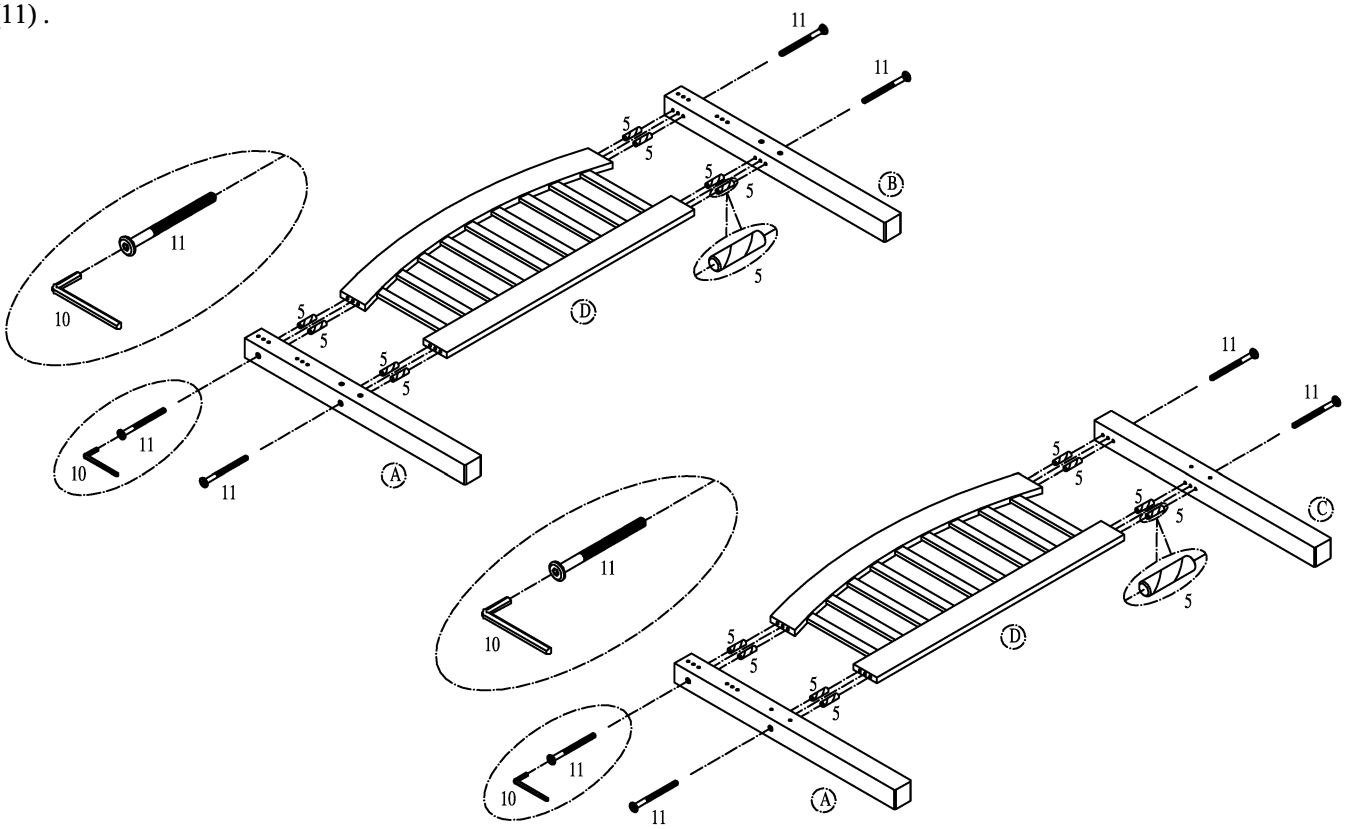

Twin Bunk Bed

STEP 5 : Upper bunk assembly

UPPER BUNK ASSEMBLY : Use alenkey (10) assembly upper head board assy with upper side rails (E&F) and guard rail (H&J) by bolts (1) & nuts (6). Next , fix guardrail support (K) on guard rails & side rails by wood screws (5). Assembly head guard rails bar (L) with guard rails (H) by head hex screw (2).

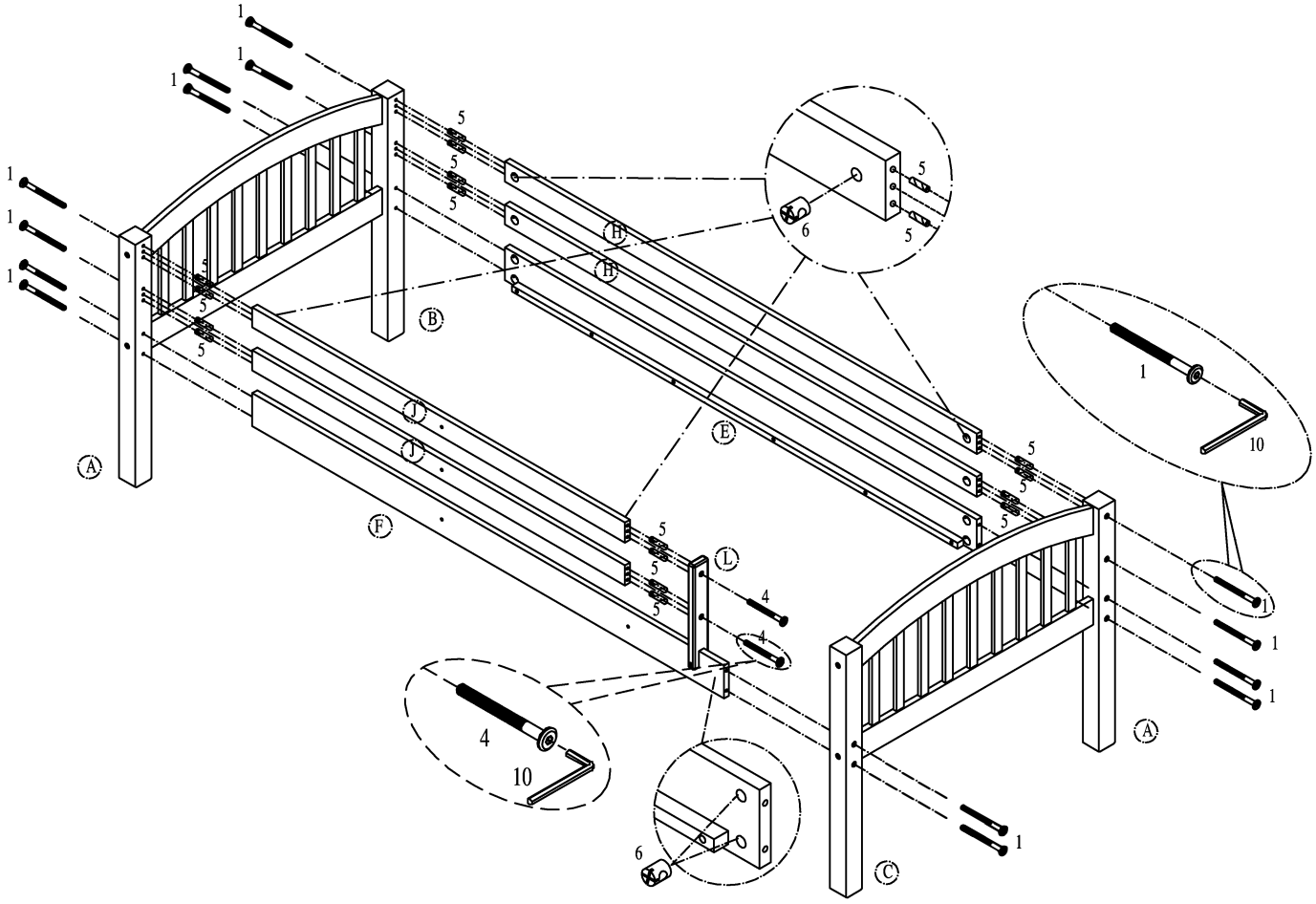

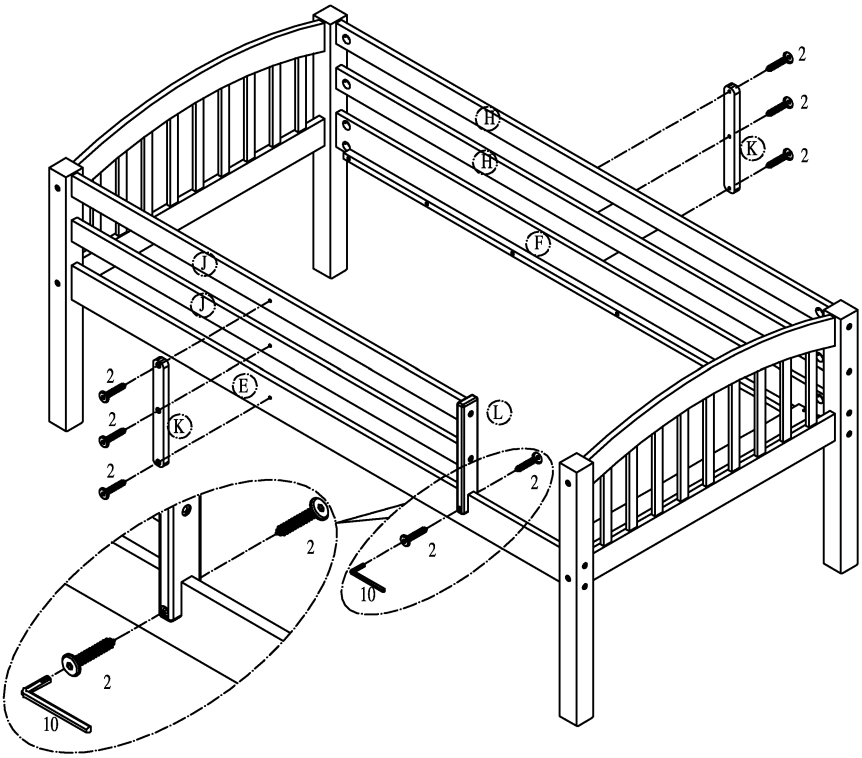

STEP 6 : Fix slats

UPPER BUNK ASSEMBLY : Use screwdriver fix each slats (G) with lower side rails (P) by screws (8)

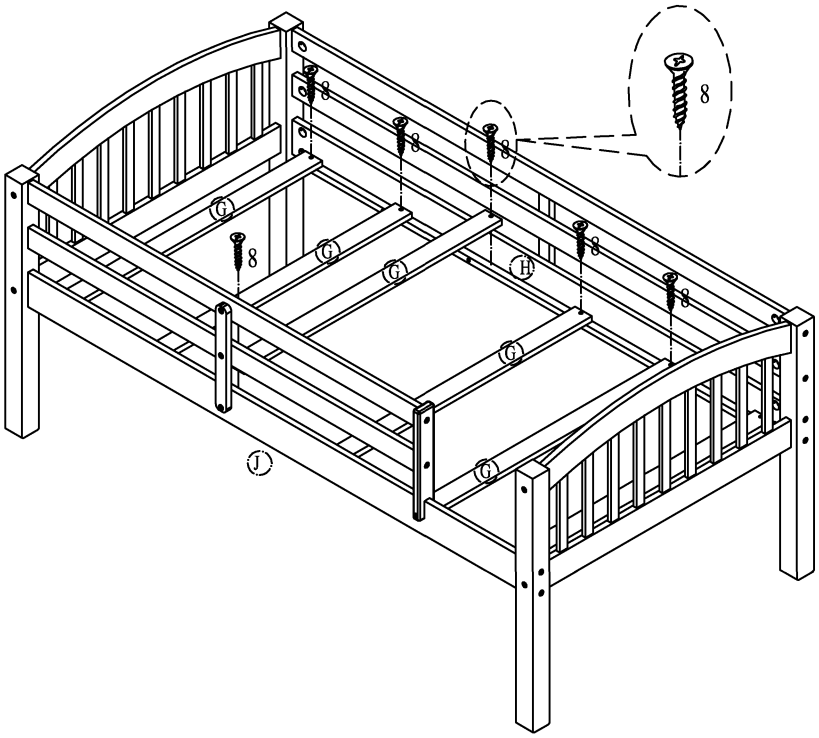

STEP 7 : Bunk bed assembly

BUNK BED ASSEMBLY : Put upper bunk on lower bunk follow dowel (7)

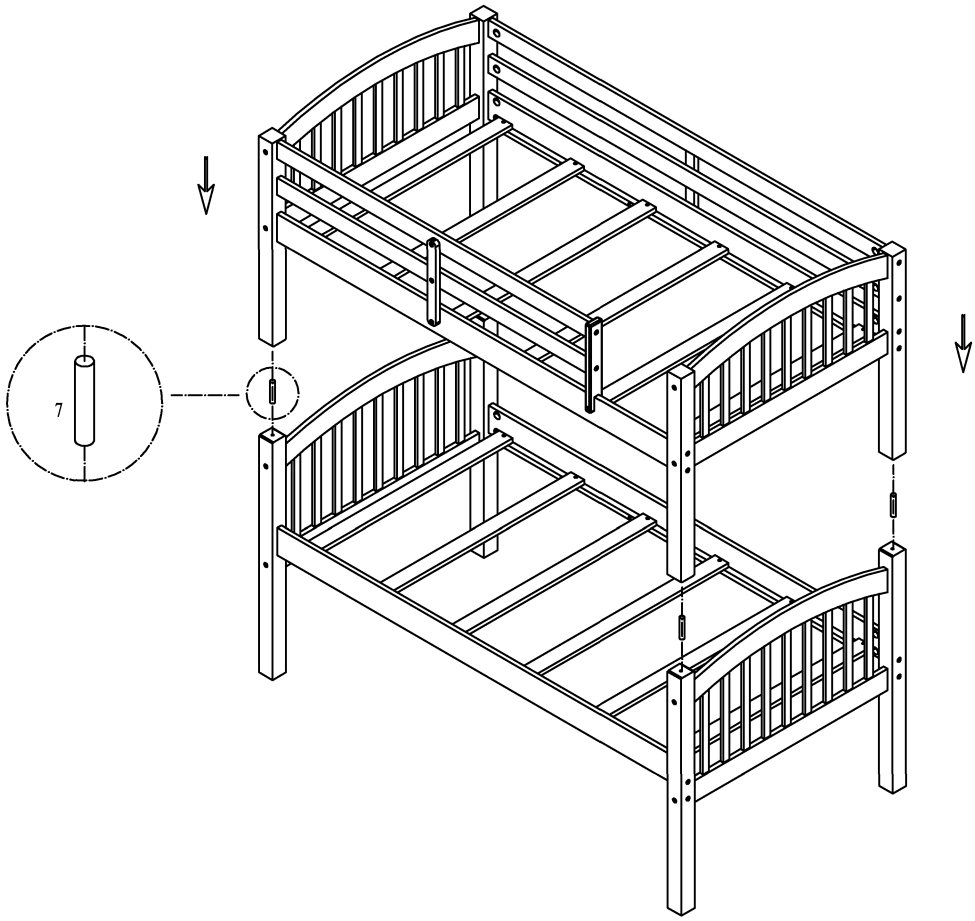

Twin Bunk Bed

STEP 8 : Ladder assembly

LADDER ASSEMBLY : Put 2 ladder (S&T) parallel and assembly ladder rungs (R) by screws (3) . Fix hooks bracket (12) by screws (9)

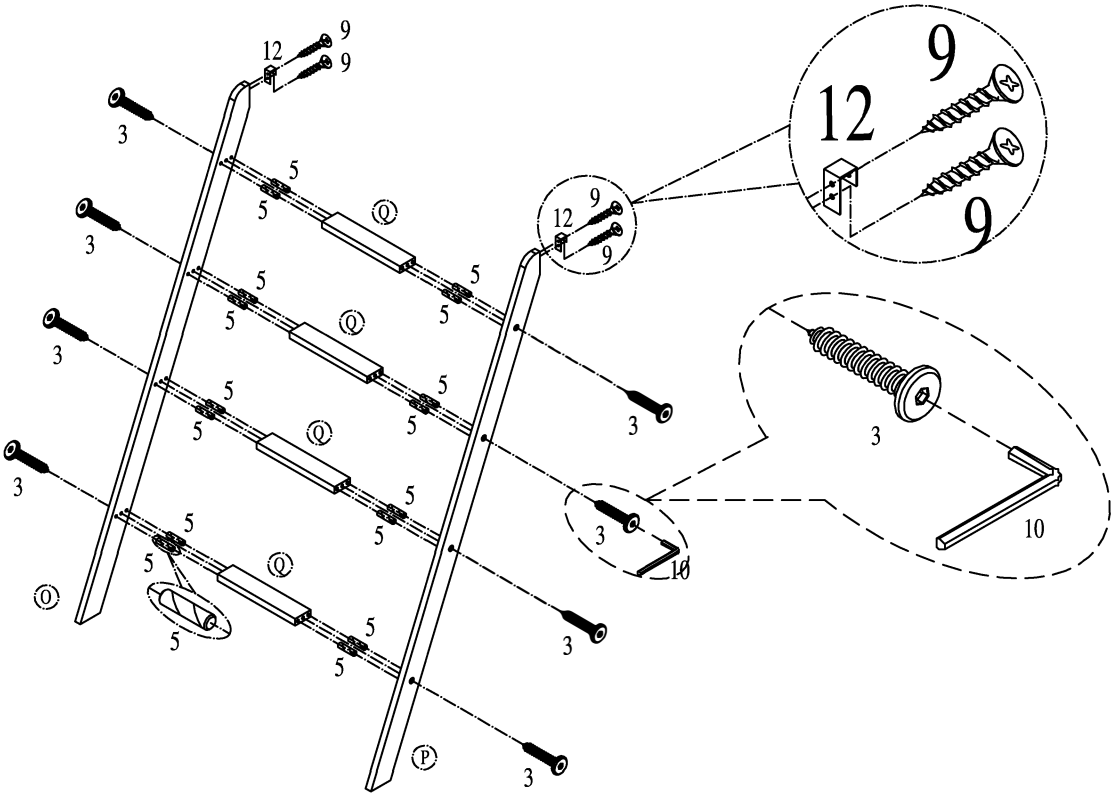

STEP 9 : Ladder assembly

LADDER ASSEMBLY : Fix ladder on upper bunk by screws (9)

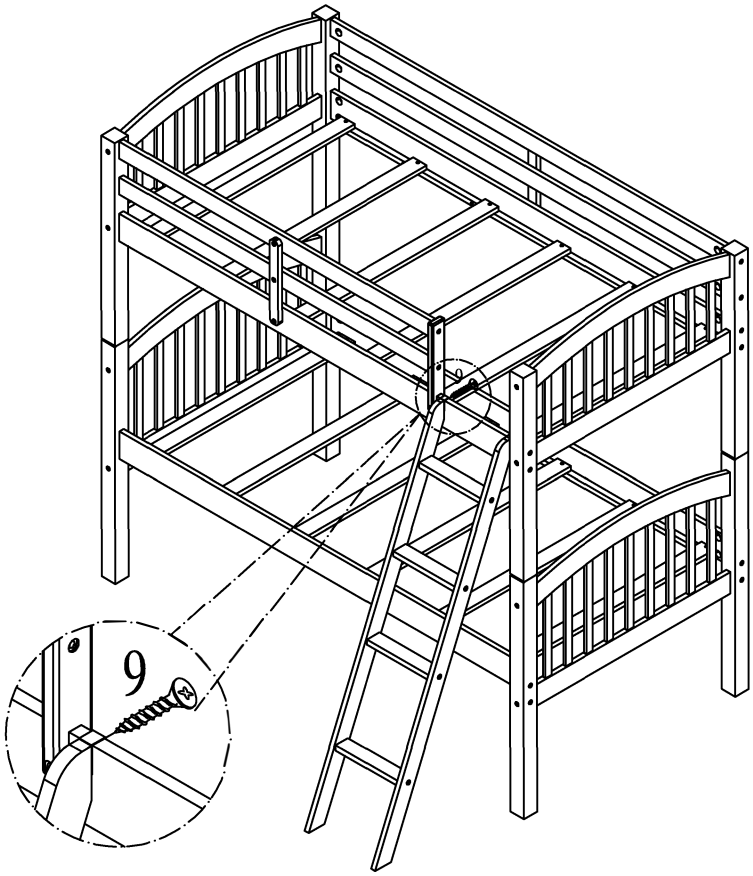

Twin Bunk Bed