Montageanleitung | Instructions de montage
Assembly Instructions| Instrucciones de montaje

90*190cm

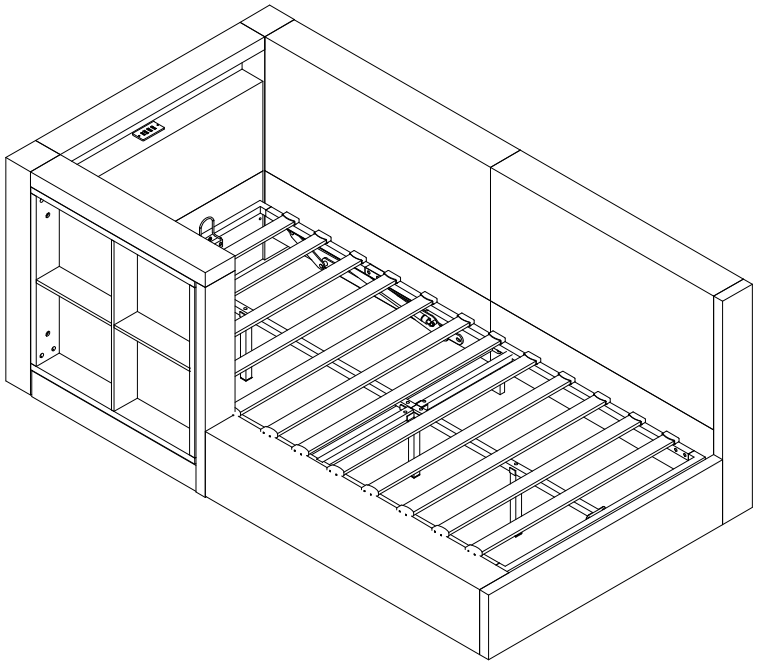

GB This set comes in 3 boxes. If you do not receive a full set of 3 boxes, please contact our customer service.

DE Dieses Set wird in 3 Schachteln geliefert. Wenn Sie nicht ein komplettes S e t von 3 Boxen erhalten, kontaktieren Sie bitte unseren Kundenservice.

FR Ce set est livré en 3 boîtes. Si vous ne recevez pas un jeu complet de 3 boîtes, veuillez contacter notre service clientèle.

English

IMPORTANT FOR GAS LIFT BEDS&MAINTAINCE

·Please place the mattress on top of the bed frame.
·Please do not pull on the strap handles.
·Please press heavily to release the compressed gas.
·Periodically check all screw & fixings to ensure they are secure.
·When moving your product, carefully lift into place.
·Wipe clean with a slightly damp cloth- please do not use abrasive chemicals or bleach.
·Do NOT allow children to operate the lift mechanism.
·Do NOT allow children near the lift base when operating the mechanism.
·Do NOT stand inside the bed or the internal storage base.
·Do NOT overload the internal storage base.
·DO NOT jump on the product or any of its parts.

Deutsch

WICHTIG FÜR GASLIFT-BETTEN&WARTUNG

·Bitte legen Sie die Matratze oben auf den Bettrahmen.
·Bitte ziehen Sie nicht an den Gurtgriffen.
·Bitte drücken Sie kräftig, um das komprimierte Gas freizusetzen.
·Überprüfen Sie regelmäßig alle Schrauben und Befestigungen, um sicherzustellen, dass sie sicher sind.
·Wenn Sie Ihr Produkt bewegen, heben Sie es vorsichtig an seinen Platz.
·Mit einem leicht feuchten Tuch abwischen - bitte keine scheuernden Chemikalien oder Bleichmittel verwenden.
·Erlauben Sie Kindern NICHT, den Hebemechanismus zu bedienen.
·Lassen Sie Kinder NICHT in die Nähe des Liftsockels, wenn Sie den Mechanismus bedienen.
·Stellen Sie sich NICHT in das Bett oder in die Innenablage.
·Überlasten Sie den internen Liftsockel NICHT.
·Springen Sie NICHT auf das Produkt oder eines seiner Teile.

Français

IMPORTANT POUR LES LITS À RELEVAGE DE GAZ&MAINTENANCE

·Veuillez placer le matelas sur le dessus du cadre de lit.
·Ne tirez pas sur les poignées de la sangle.
·Appuyez fortement pour libérer le gaz comprimé.
·Vérifiez régulièrement que toutes les vis et fixations sont bien en place.
·Lorsque vous déplacez votre produit, soulevez-le avec précaution pour le mettre en place.
·Nettoyez avec un chiffon légèrement humide - n'utilisez pas de produits chimiques abrasifs ou d'eau de Javel.
·Ne laissez pas les enfants utiliser le mécanisme de levage.
·Ne laissez pas les enfants s'approcher de la base de levage lorsqu'ils actionnent le mécanisme.
·Ne vous tenez PAS à l'intérieur du lit ou de la base de stockage interne.
·Ne surchargez pas la base de stockage interne.
·Ne pas sauter sur le produit ou l'une de ses parties.

Italiano IMPORTANTE PER I LETTI CON SOLLEVAMENTO A GAS E LA MANUTENZIONE

·Posizionare il materasso sopra la struttura del letto.
·Non tirare le maniglie della cinghia.
·Premere con forza per rilasciare il gas compresso.
·Controllare periodicamente tutte le viti e i fissaggi per assicurarsi che siano saldi.
·Quando si sposta il prodotto, sollevarlo con cautela.
·Pulire con un panno leggermente umido, senza usare prodotti chimici abrasivi o candeggina.
·NON permettere ai bambini di azionare il meccanismo di sollevamento.
·NON permettere ai bambini di avvicinarsi alla base di sollevamento quando si aziona il meccanismo.
·NON sostare all'interno del letto o della base di contenimento interna.
·NON sovraccaricare la base di contenimento interna.
·NON saltare sul prodotto o sulle sue parti.

Español IMPORTANTE PARA LAS CAMAS ELEVADORAS DE GAS&MANTENIMIENTO

·Coloque el colchón sobre el somier.
·No tire de las asas de la correa.
·Presione con fuerza para liberar el gas comprimido.
·Compruebe periódicamente que todos los tornillos y fijaciones estén bien sujetos.
·Al mover el producto, levántelo con cuidado para colocarlo en su sitio.
·Limpie con un paño ligeramente humedecido; no utilice productos químicos abrasivos ni lejía.
·NO permita que los niños accionen el mecanismo de elevación.
·NO permita que los niños se acerquen a la base elevadora cuando accionen el mecanismo.
·NO se ponga de pie dentro de la cama o de la base de almacenamiento interna.
·NO sobrecargue el somier.
·NO salte sobre el producto ni sobre ninguna de sus piezas.

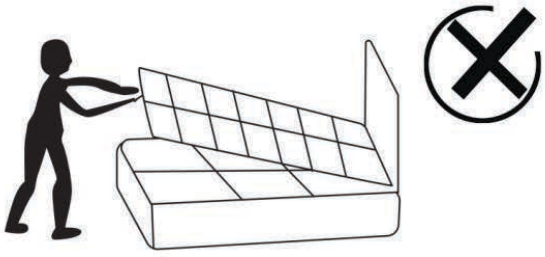

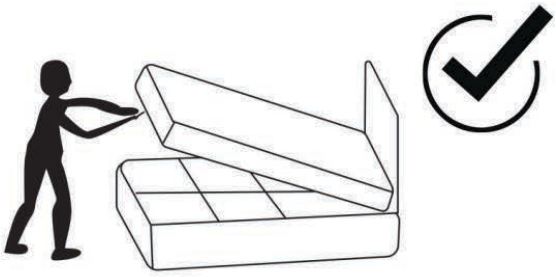

N601P541101

1	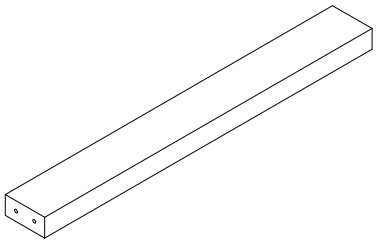	X1	2	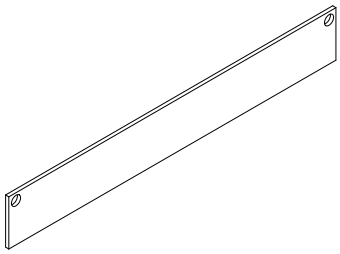	X1
11	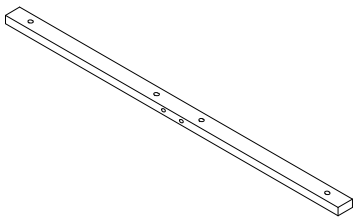	X1	12		X1
20	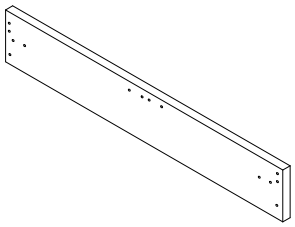	X1	28	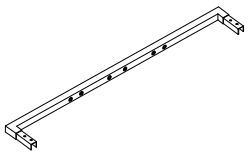	X1
29	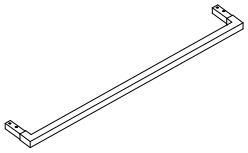	X1	30	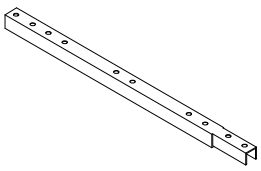	X2
31	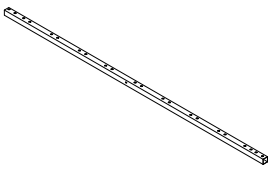	X2	32	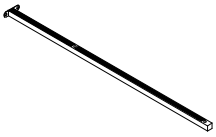	X1
34	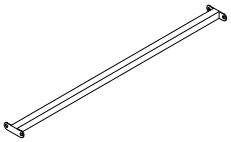	X1	36	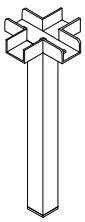	X1

37	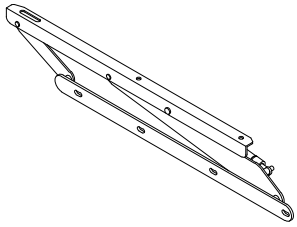	X1	38	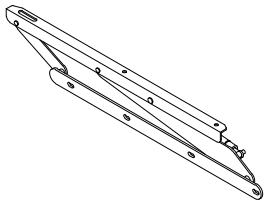	X1
39	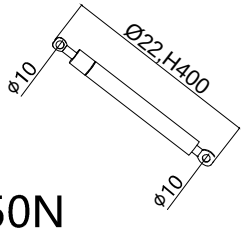 450N	X2	45		X6
52	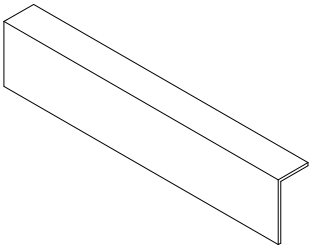	X1	53	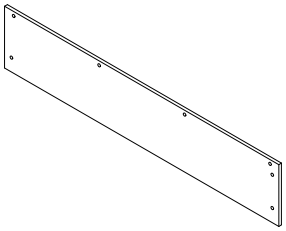	X1
54	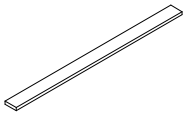	X3			

N601P541102

3	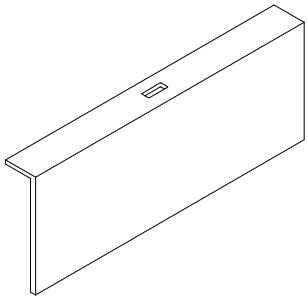	X1	4	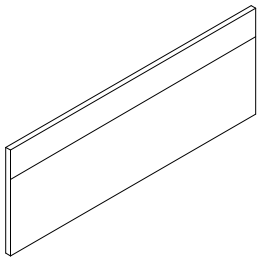	X1
6	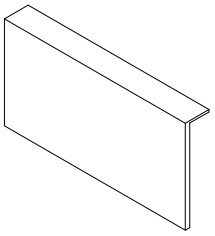	X1	8	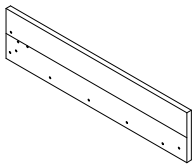	X1
9	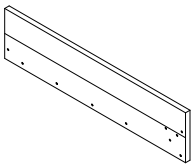	X1	10		X1
16	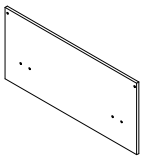	X1	21	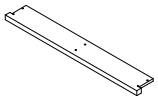	X2
22		X2	24		X1
25	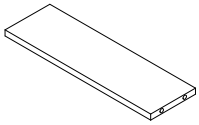	X1	26	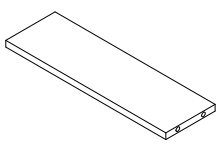	X1

27	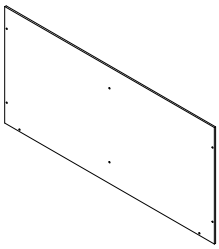	X2	33		X1
54	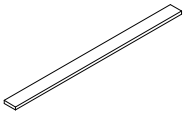	X6			

N601P541103

5	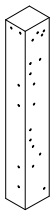	X1	7	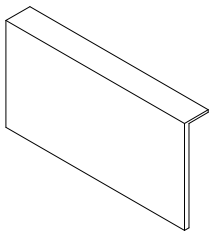	X1
13	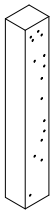	X1	14	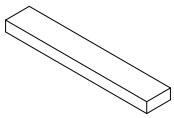	X1
15	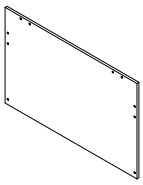	X1	17	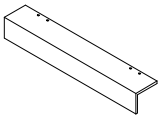	X1
18		X1	35		X2
40	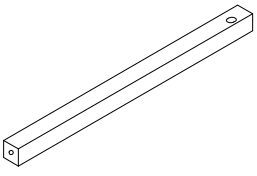	X2	41	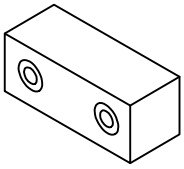	X1
42	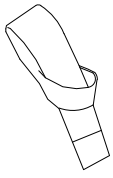	X1	43	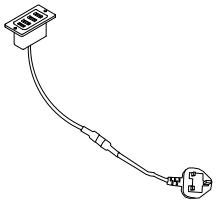	X1

44	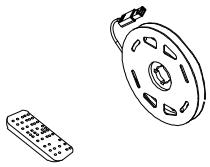	X1	46		X14
47		X10	48	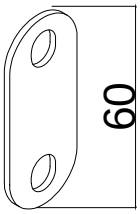	X4
49	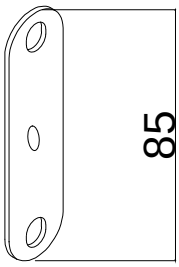	X4	50	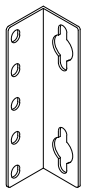	X13
51	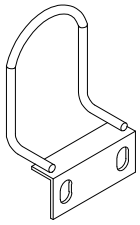	X2	54	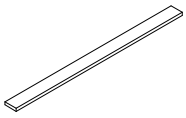	X3
55	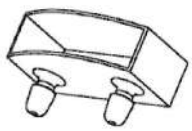	X24	56	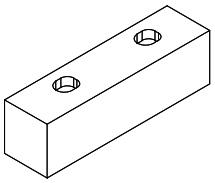	X1
57		X2			

Hardware list-Hardwareliste-Liste de quincaillerie

N601P541101

 M5*40mm A*16PCS	 M6*40mm B*2PCS	 M8*16mm C*184PCS	 M8*35mm D*22PCS
 M8*40mm E*2PCS	 M3*12mm F*2PCS	 M9*15mm G*20PCS	 M6*35mm H*20PCS
 M8*95mm I*2PCS	 M8 J*4PCS	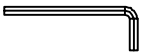 M3 K*1PCS	 M4 L*1PCS
 M5 M*1PCS	 M8 N*1PCS	 Spanner O*1PCS	 decorative tepe P*1PCS
 ø8*22MM Q*4PCS	 M8*30mm R*4PCS		

L:

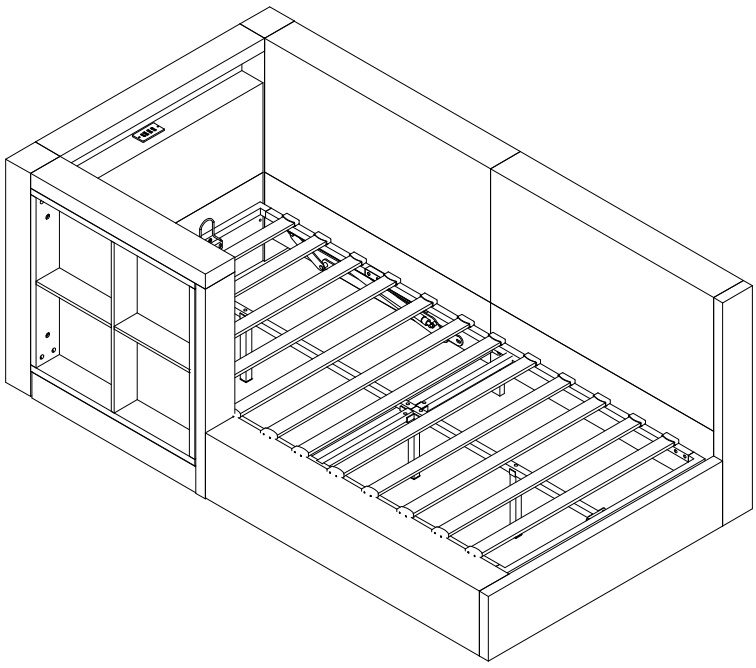

Type1

Page:1-23

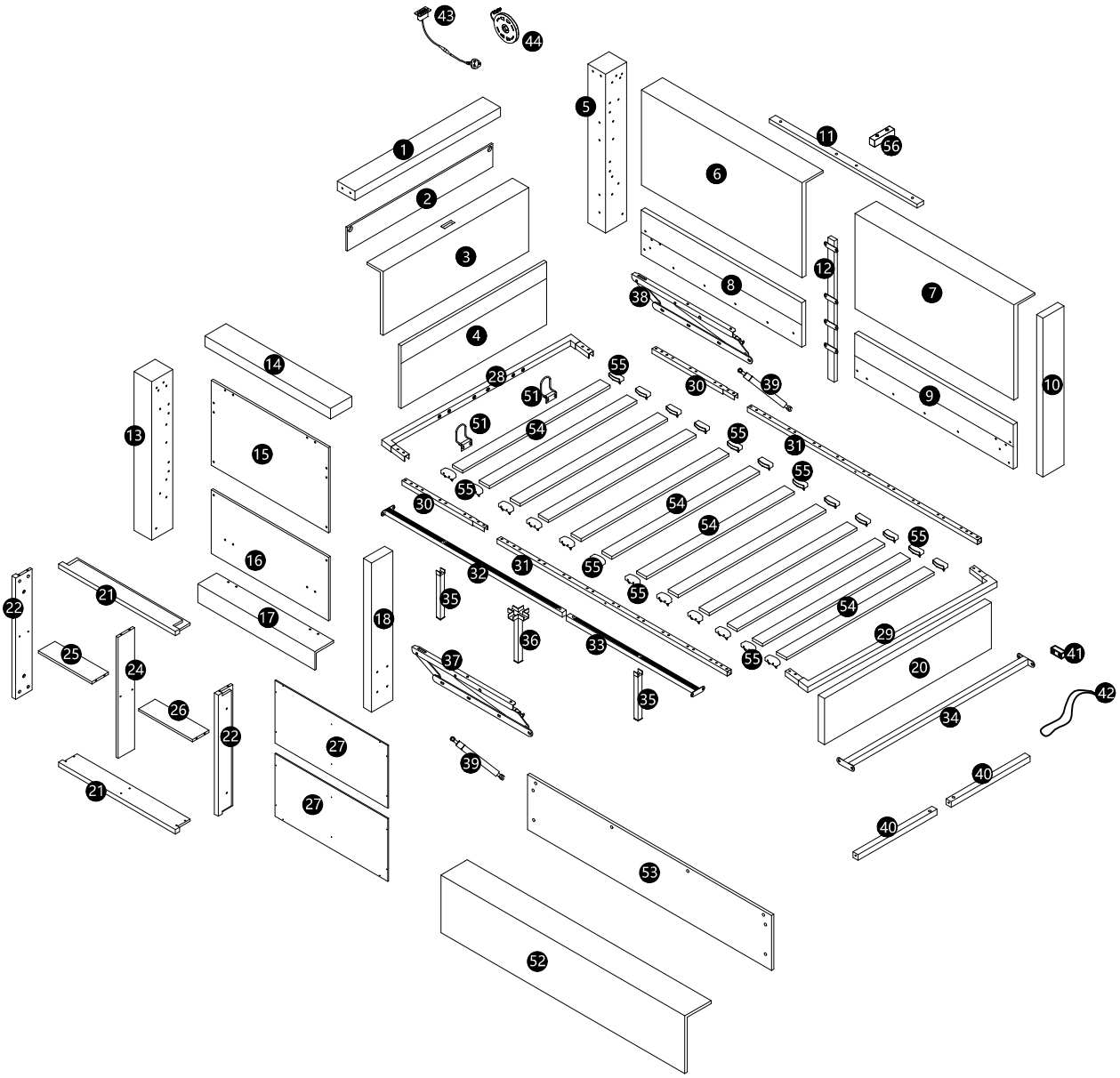
43
44
5
1
11
56
6
2
3
12
8
7
38
4
14
28
55
30
39
10
9
51
51
54
13
15
55
31
55
55
30
54
54
55
16
32
31
55
55
21
22
35
54
17
18
36
33
29
25
24
37
55
20
41
42
26
22
27
35
34
39
40
21
27
40
53
52

Type1

1 F*2PCS



M3*12mm

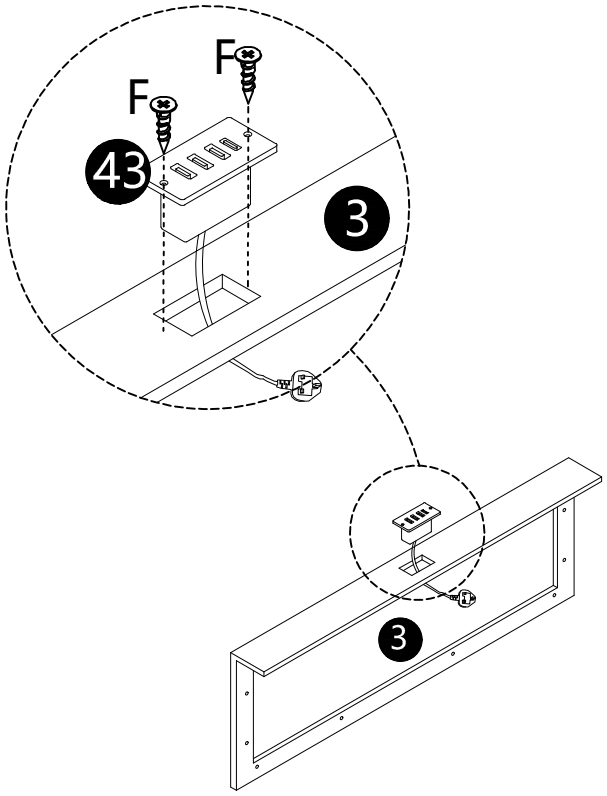

2 C*8PCS



M8*16mm

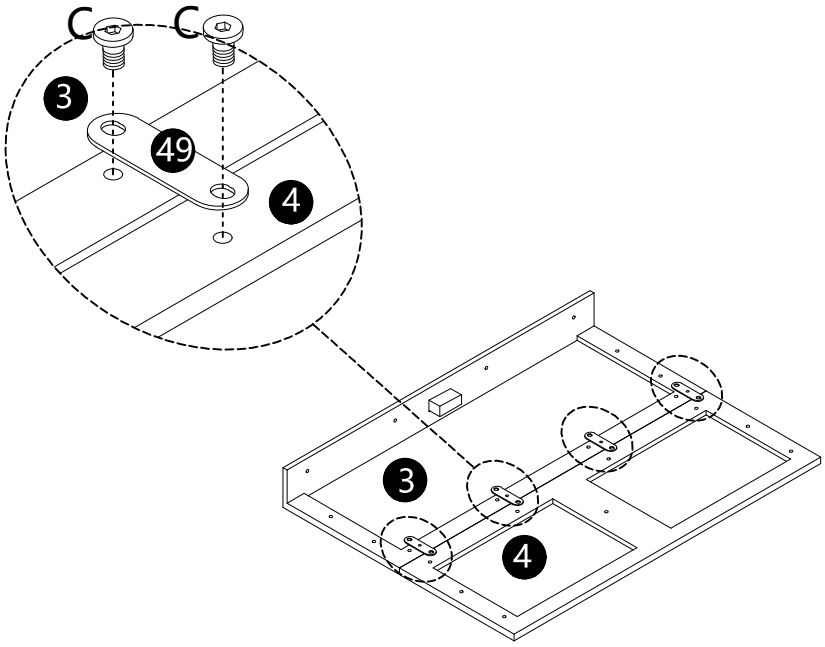

3

C*8PCS

M8*16mm

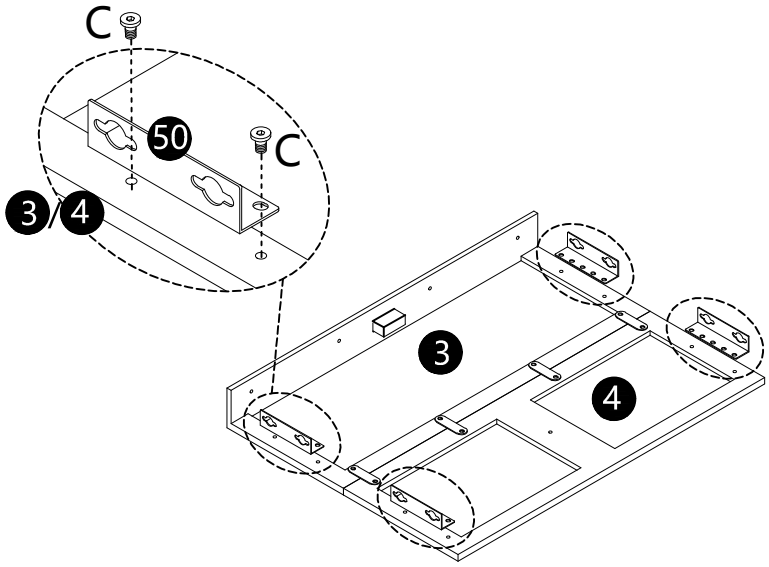

4

C*8PCS	D*4PCS	Q*4PCS
M8*16mm	M8*35mm	ø8*22MM

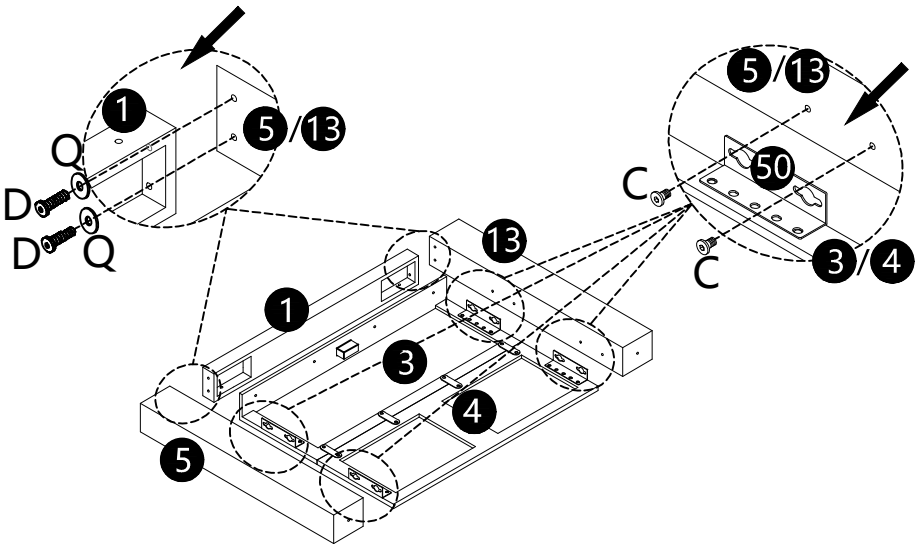

5

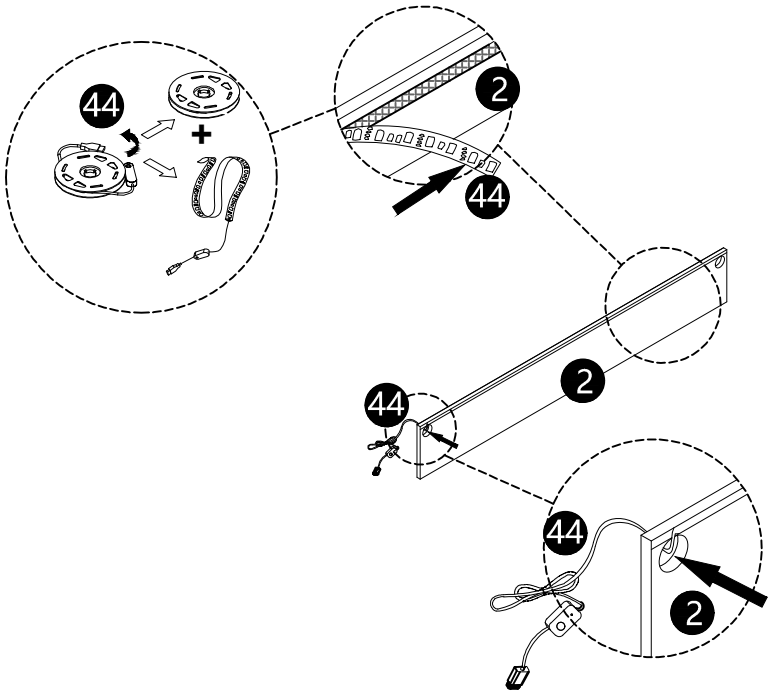

6

C*16PCS

M8*16mm

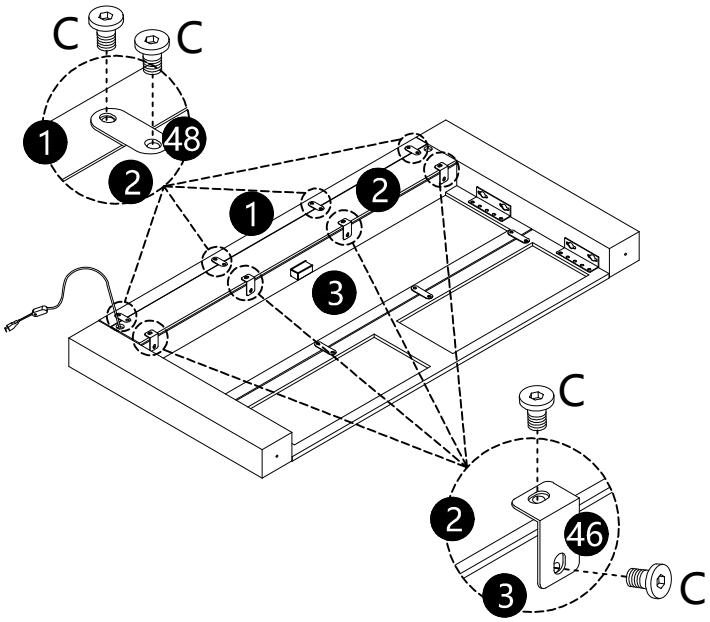

7

C*6PCS

M8*16mm

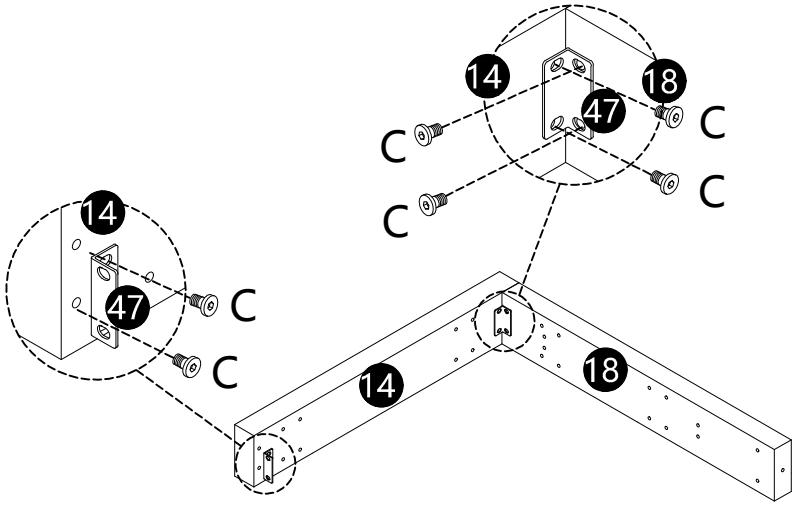

8

C*8PCS

M8*16mm

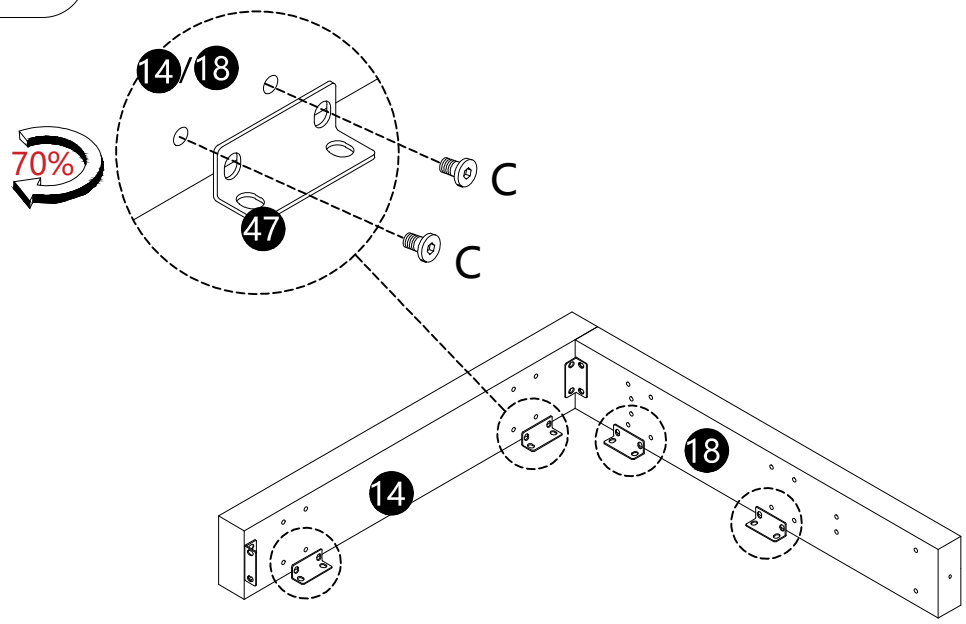

9

C*3PCS

M8*16mm

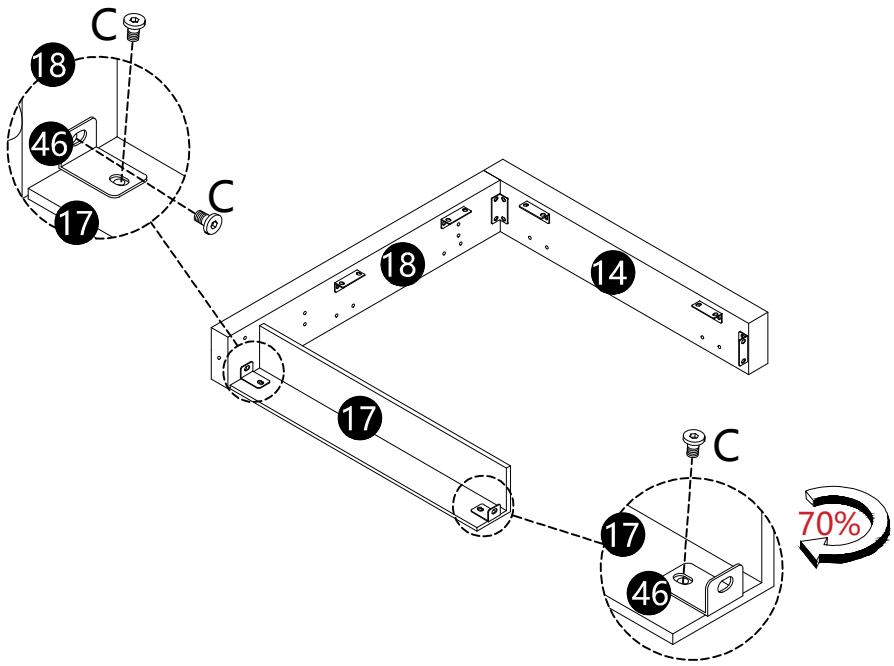

10

C*20PCS

M8*16mm

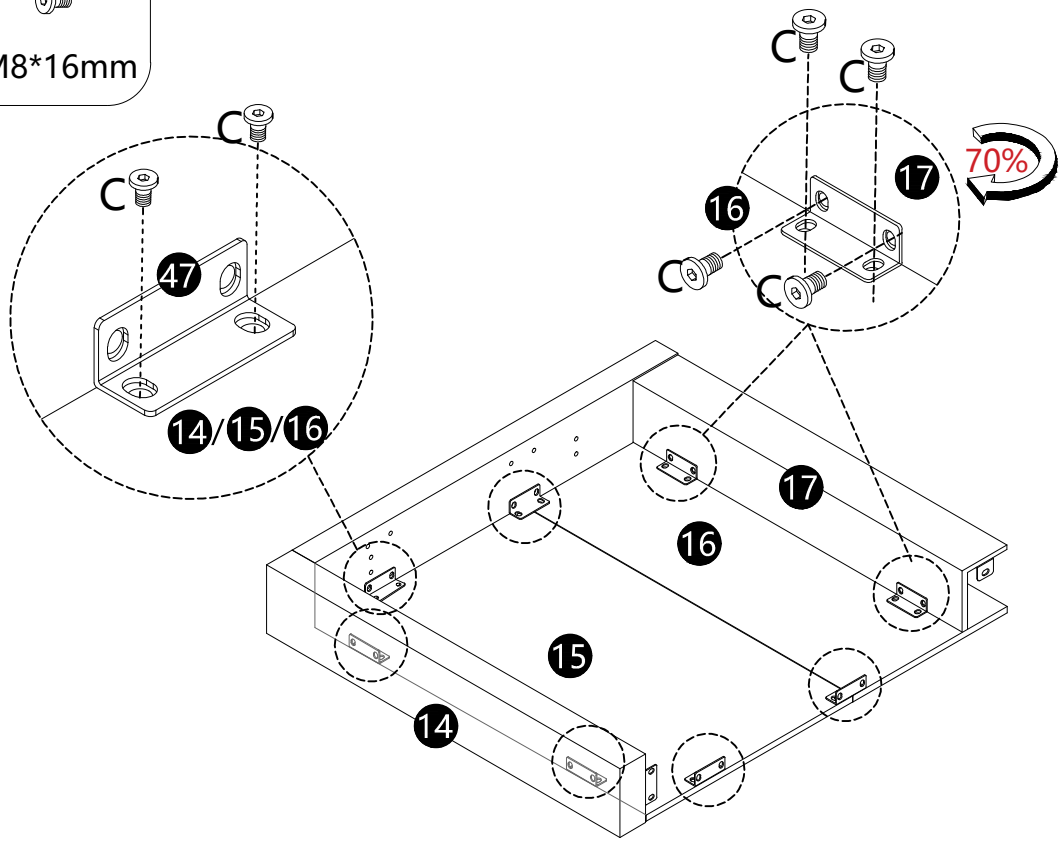

11

C*7PCS

M8*16mm

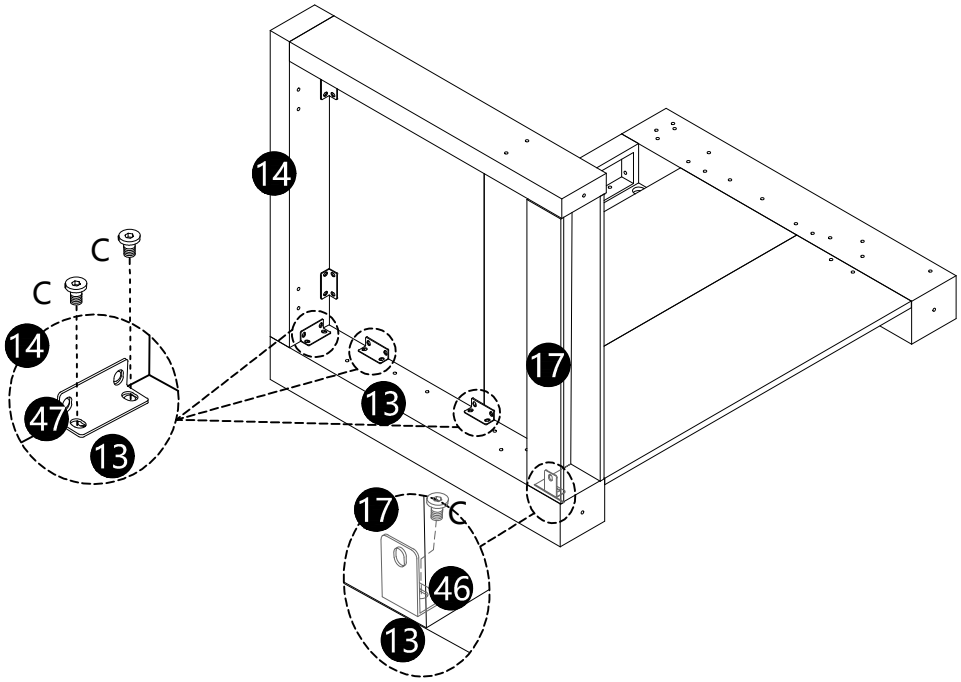

12

H*8PCS

M6*35mm

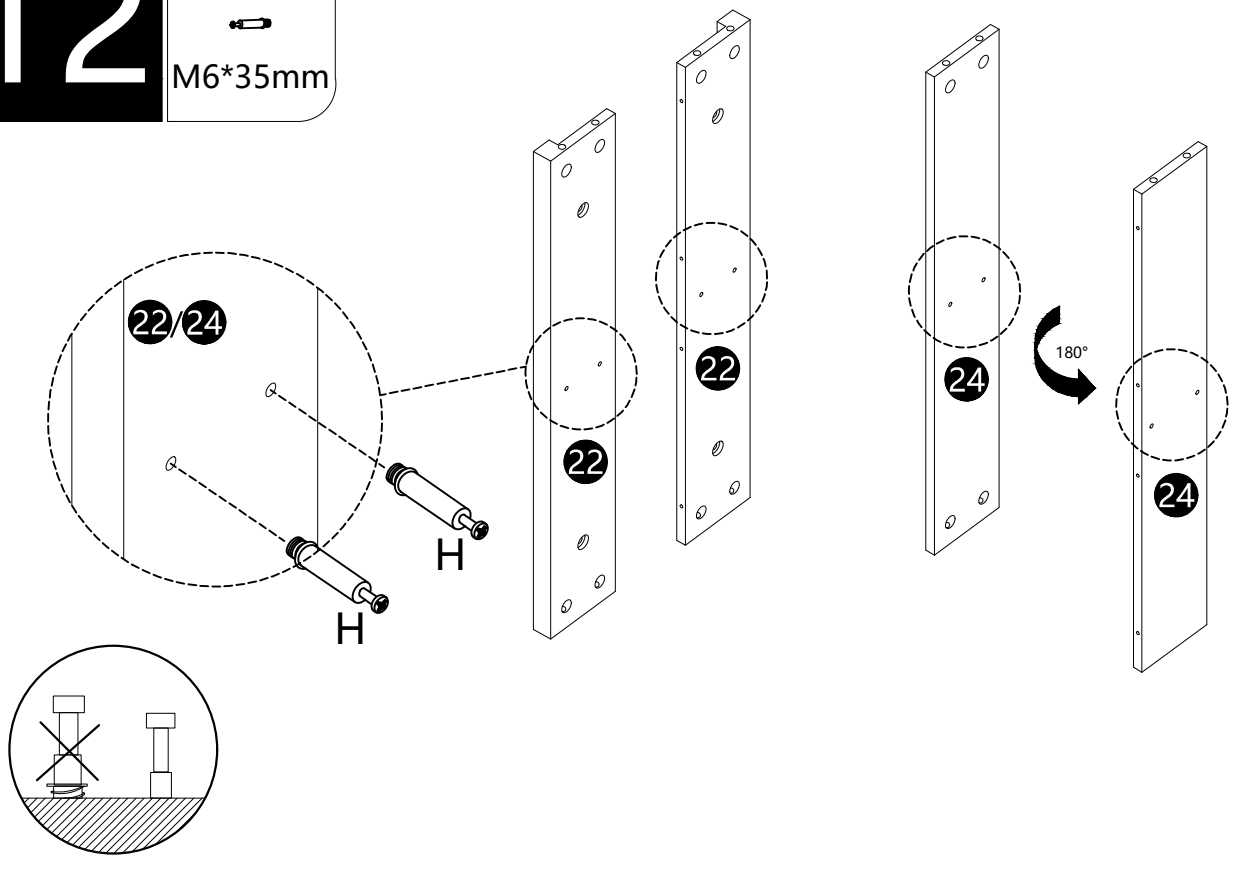

13

H*12PCS

M6*35mm

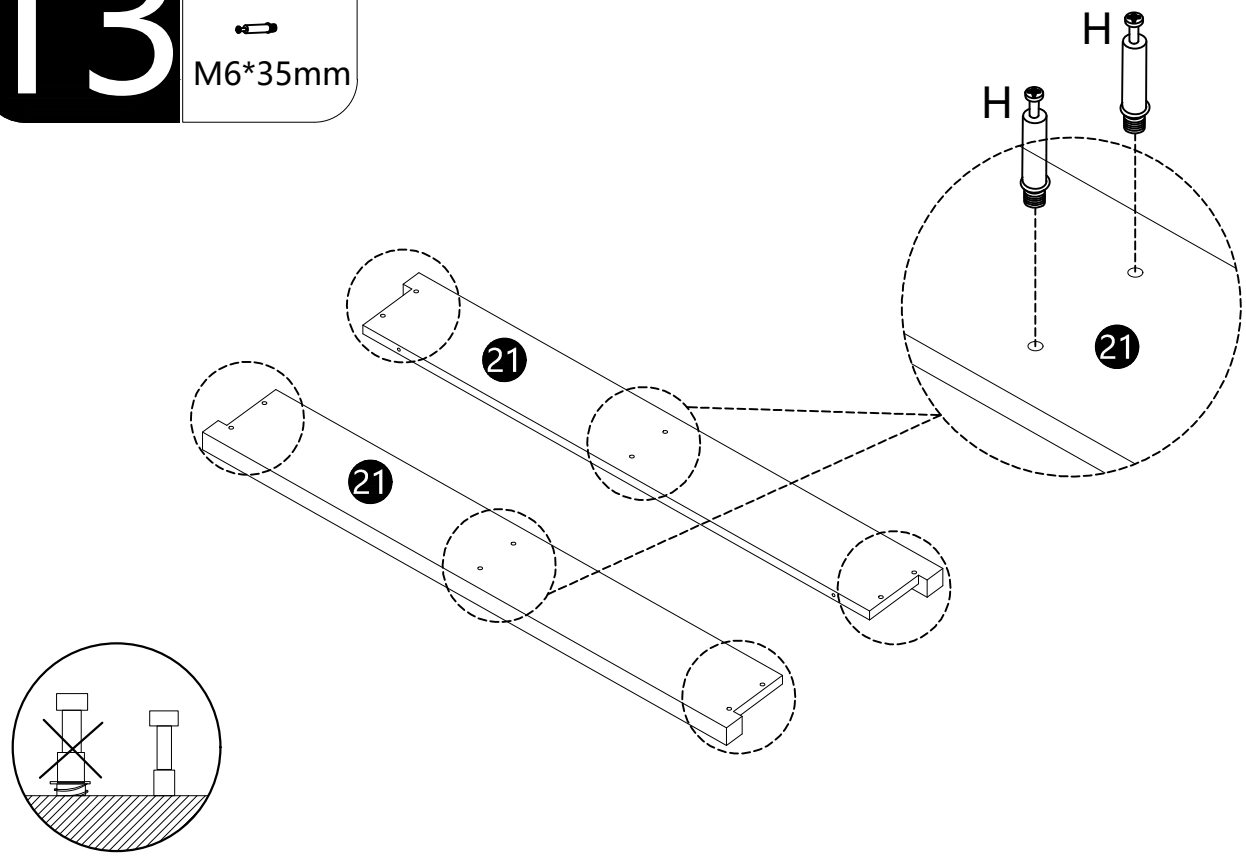

14

G*4PCS

M9*15mm

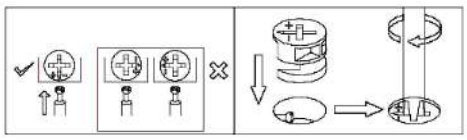

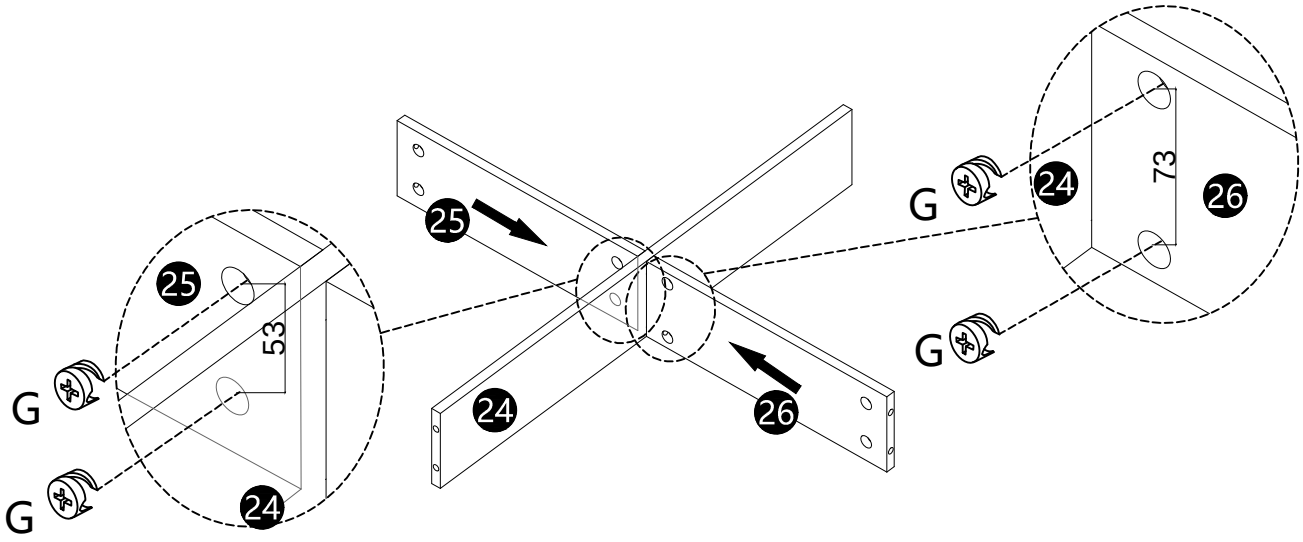

15

G*2PCS

M9*15mm

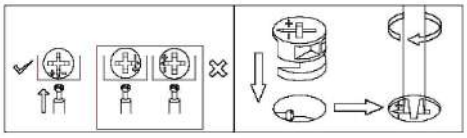

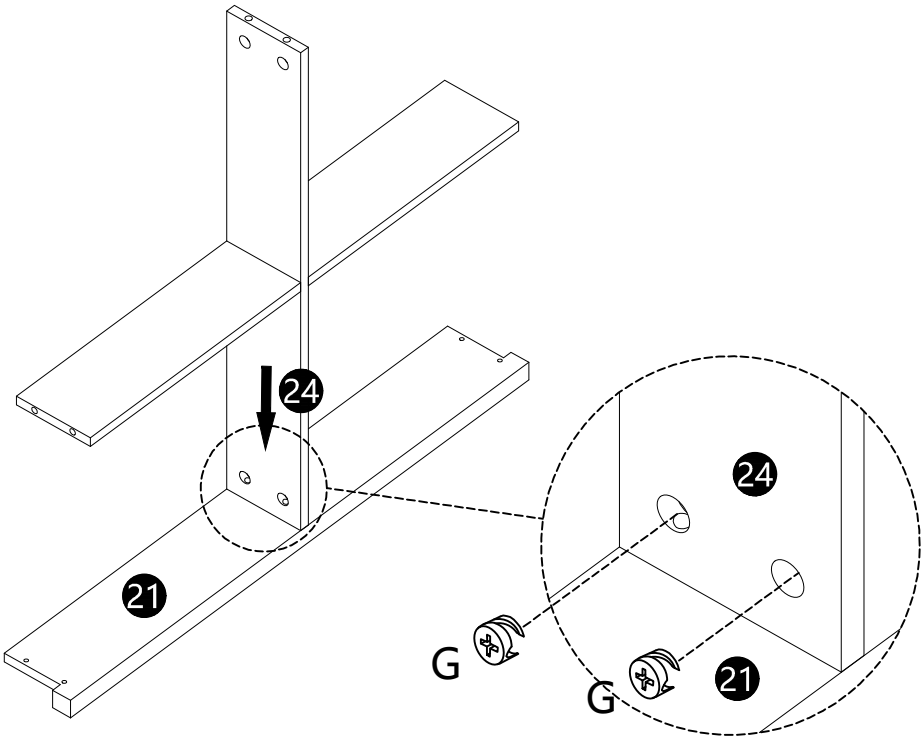

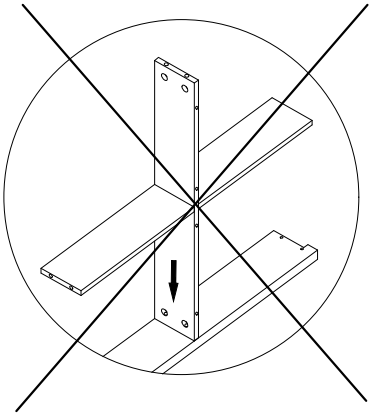

16

G*8PCS

M9*15mm

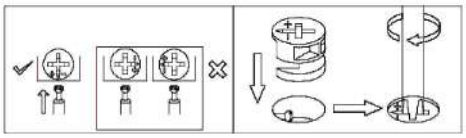

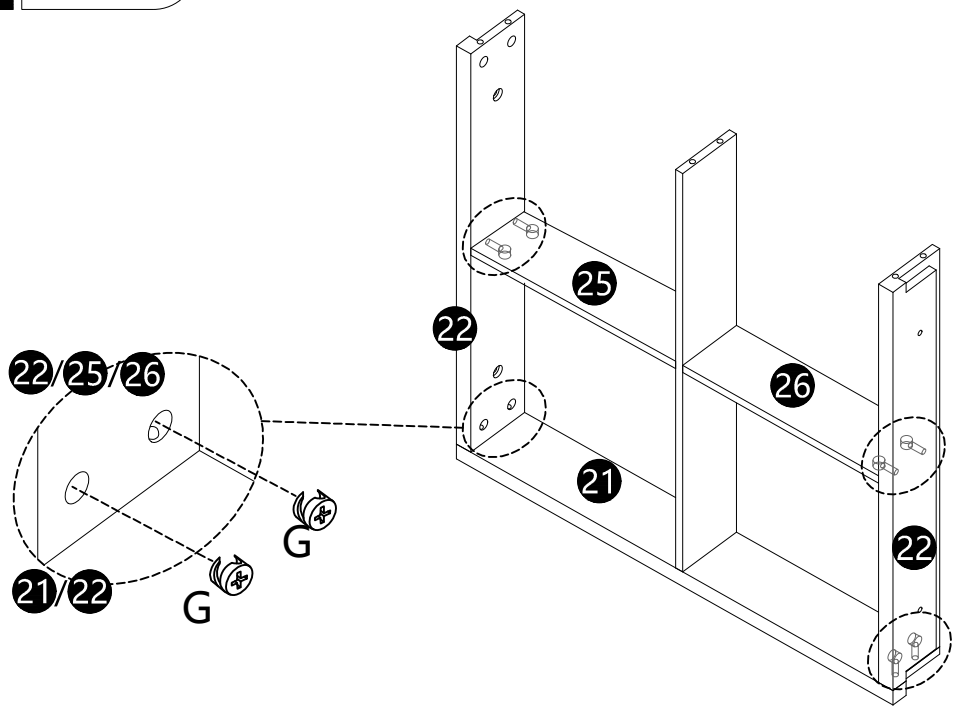

17

G*6PCS

M9*15mm

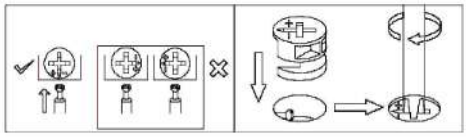

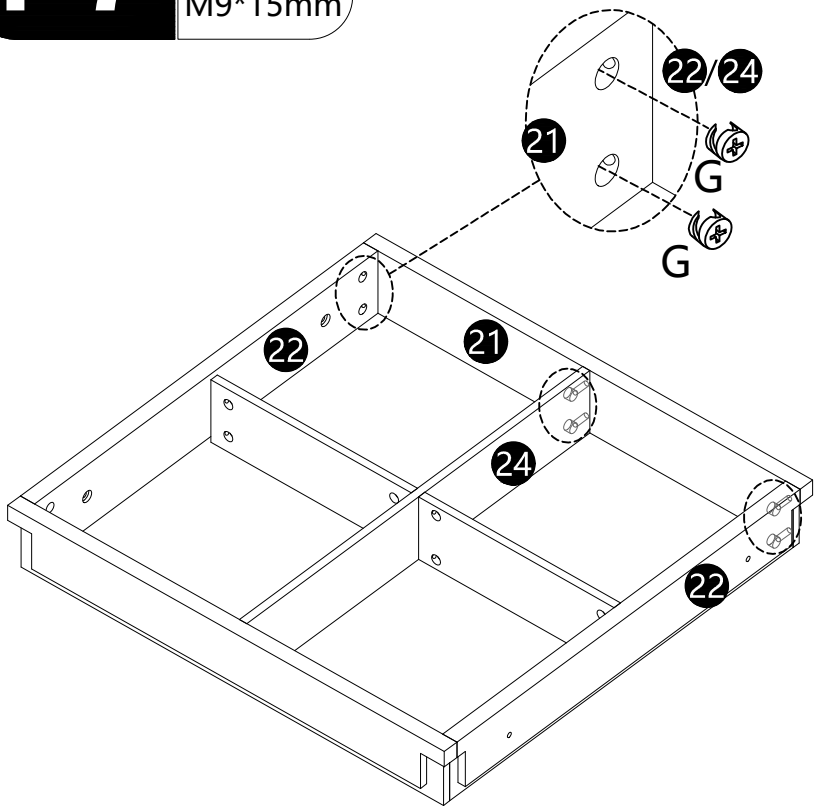

18

A*16PCS

M5*40mm

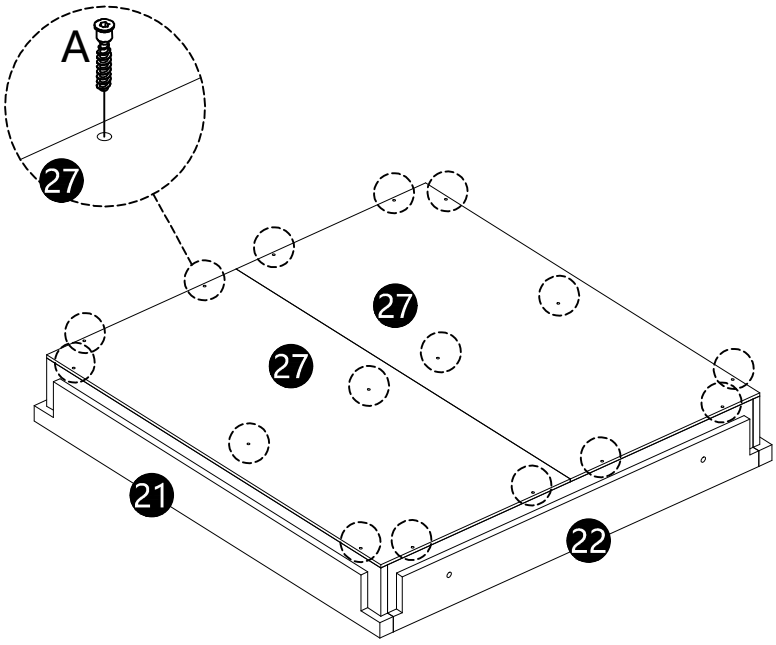

19

E*4PCS



M8*35mm

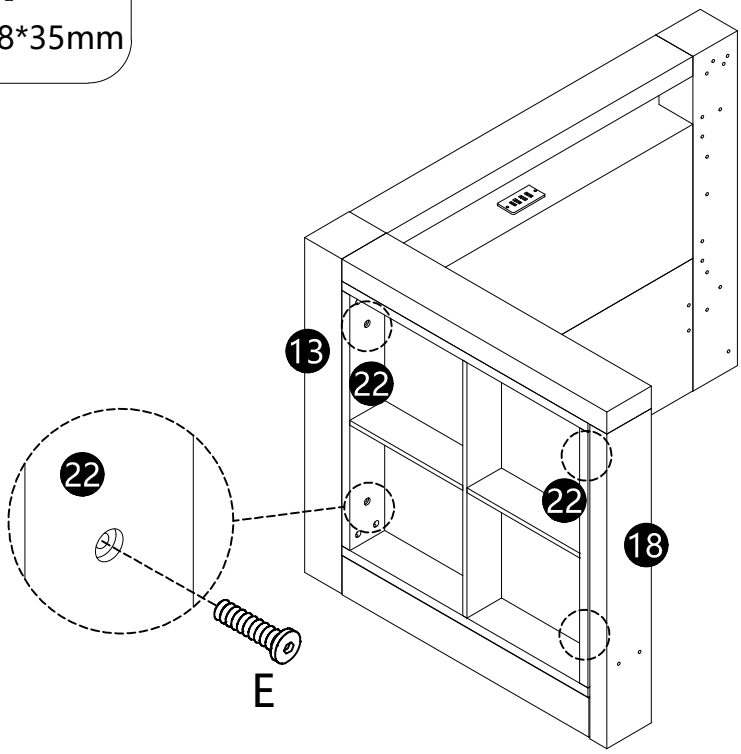

20

C*12PCS



M8*16mm

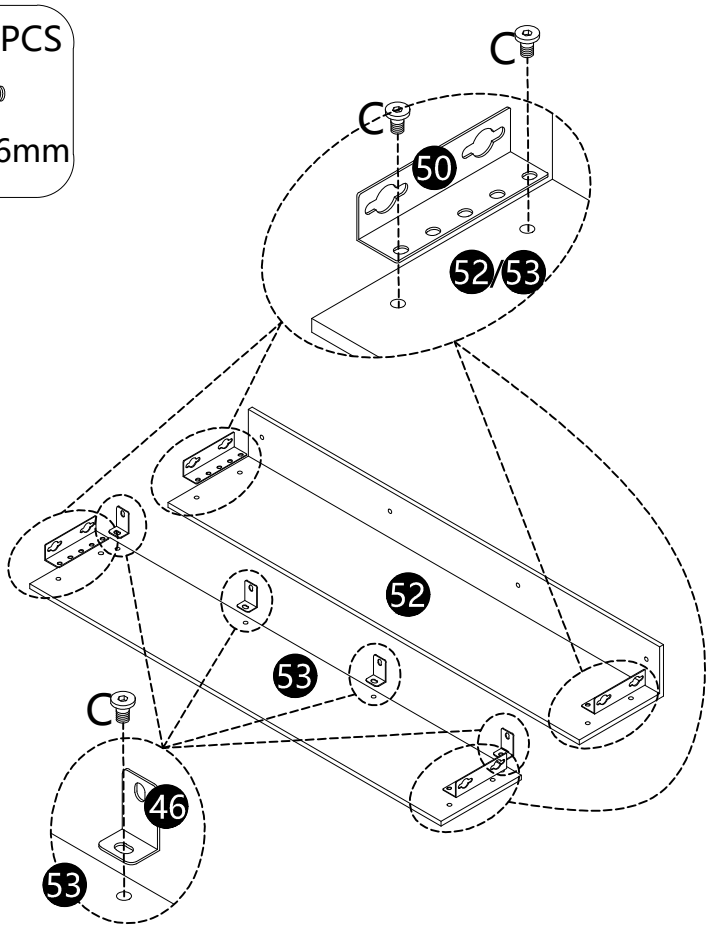

21

C*4PCS

M8*16mm

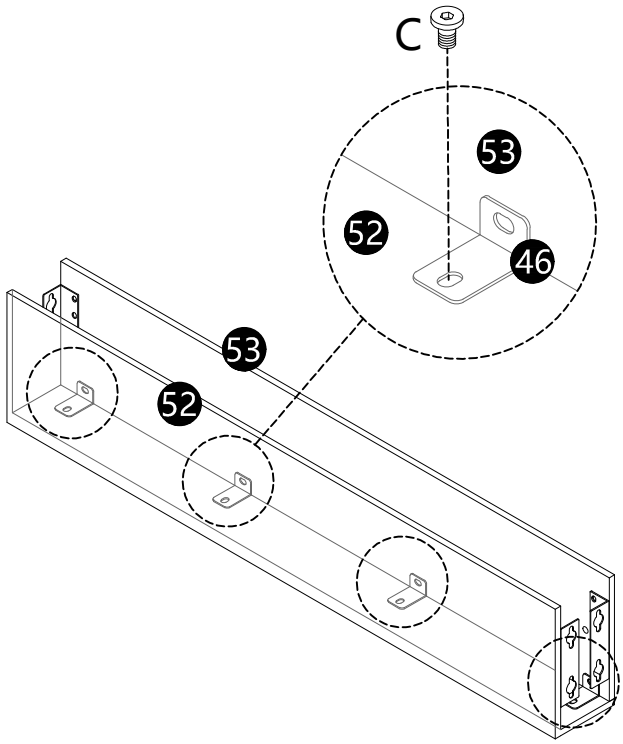

22

D*8PCS

M8*35mm

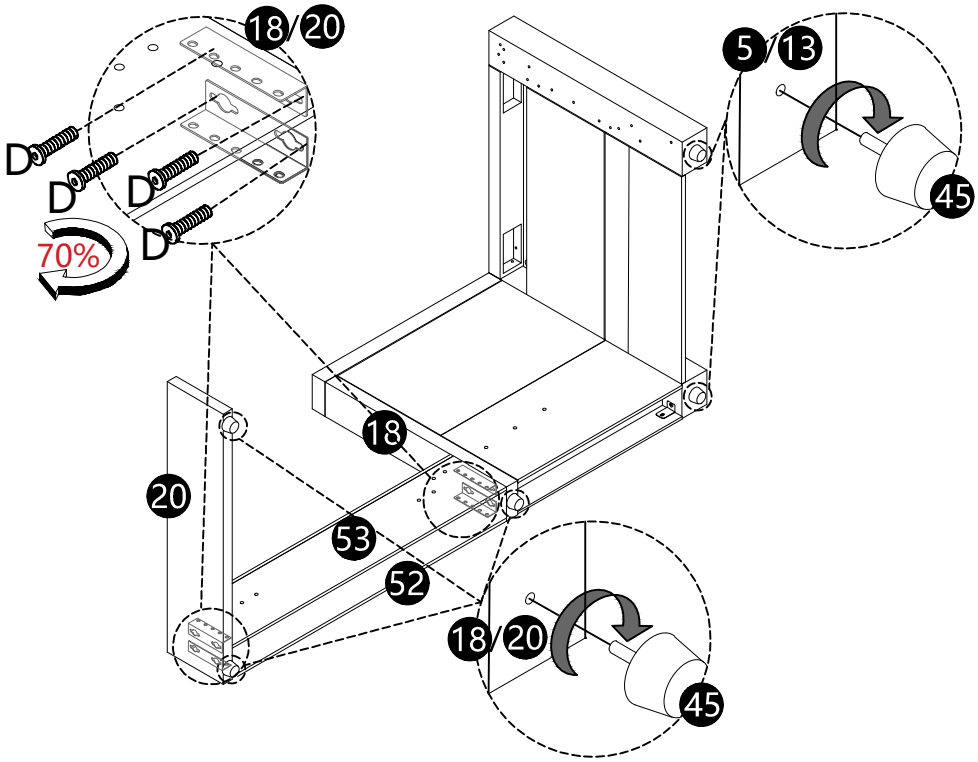

23

C*8PCS

M8*16mm

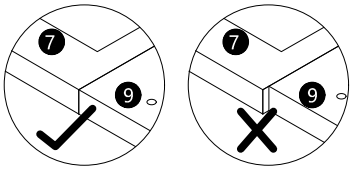

24

R*4PCS	I*2PCS
	
M8*30mm	M8*95mm

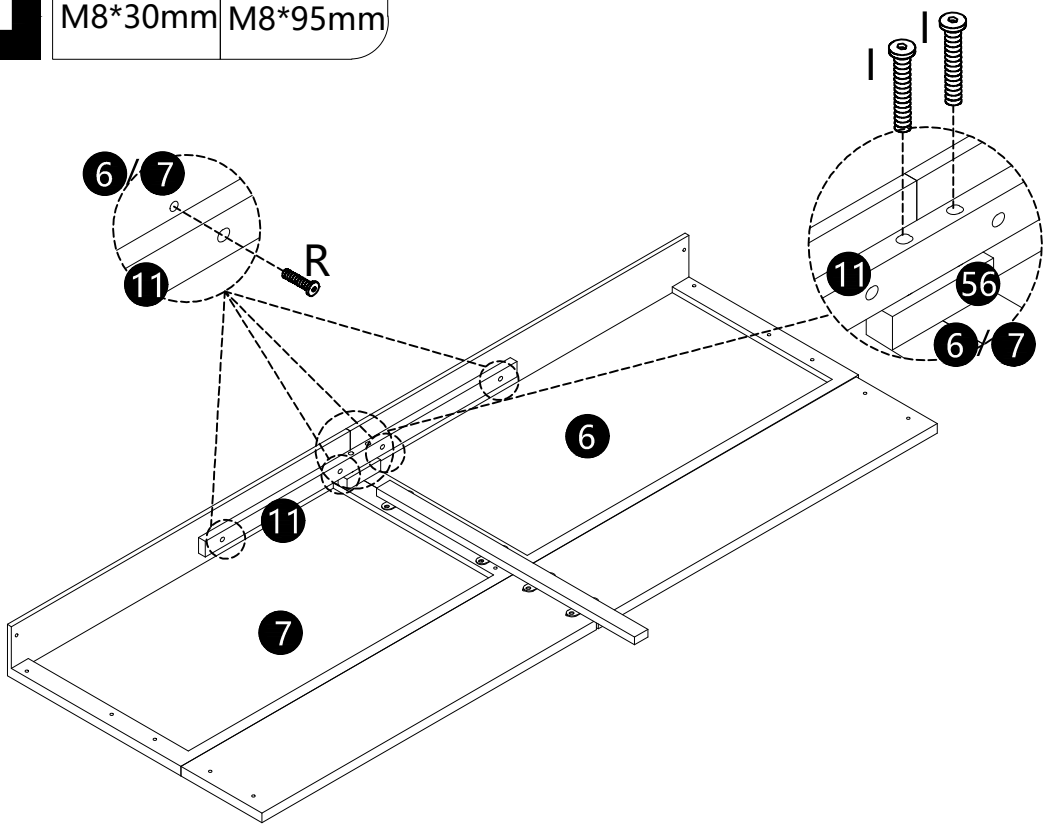

25

C*12PCS

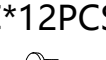

M8*16mm

26

C*6PCS



M8*16mm

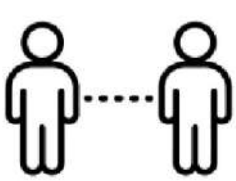



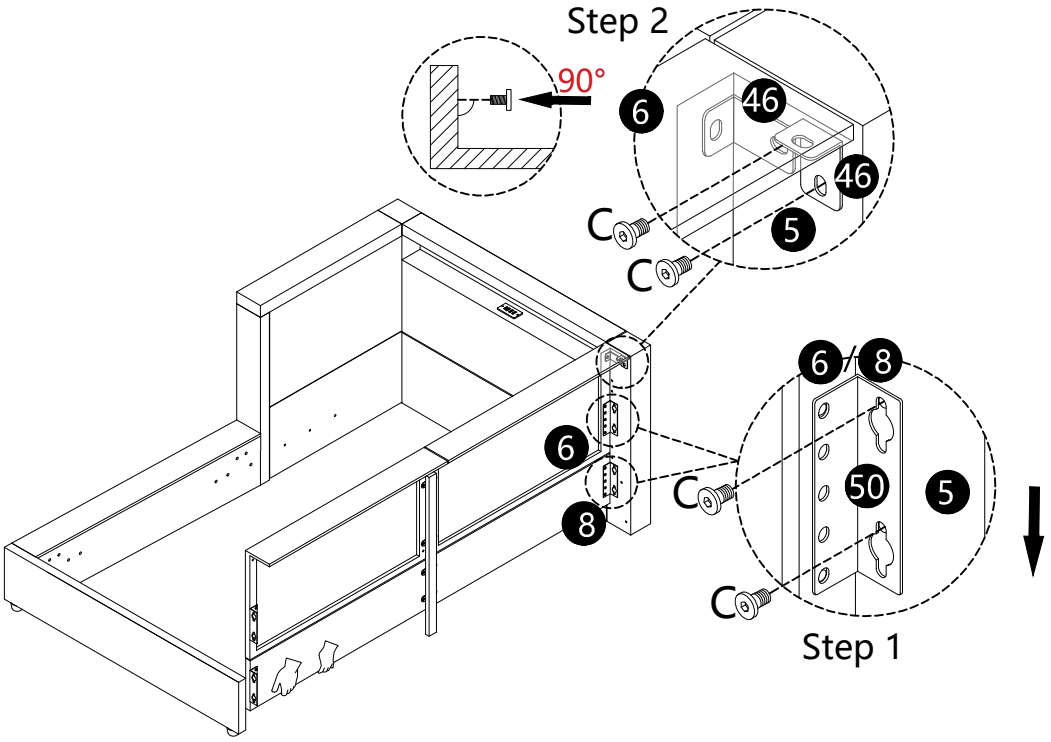

27

C*6PCS

M8*16mm

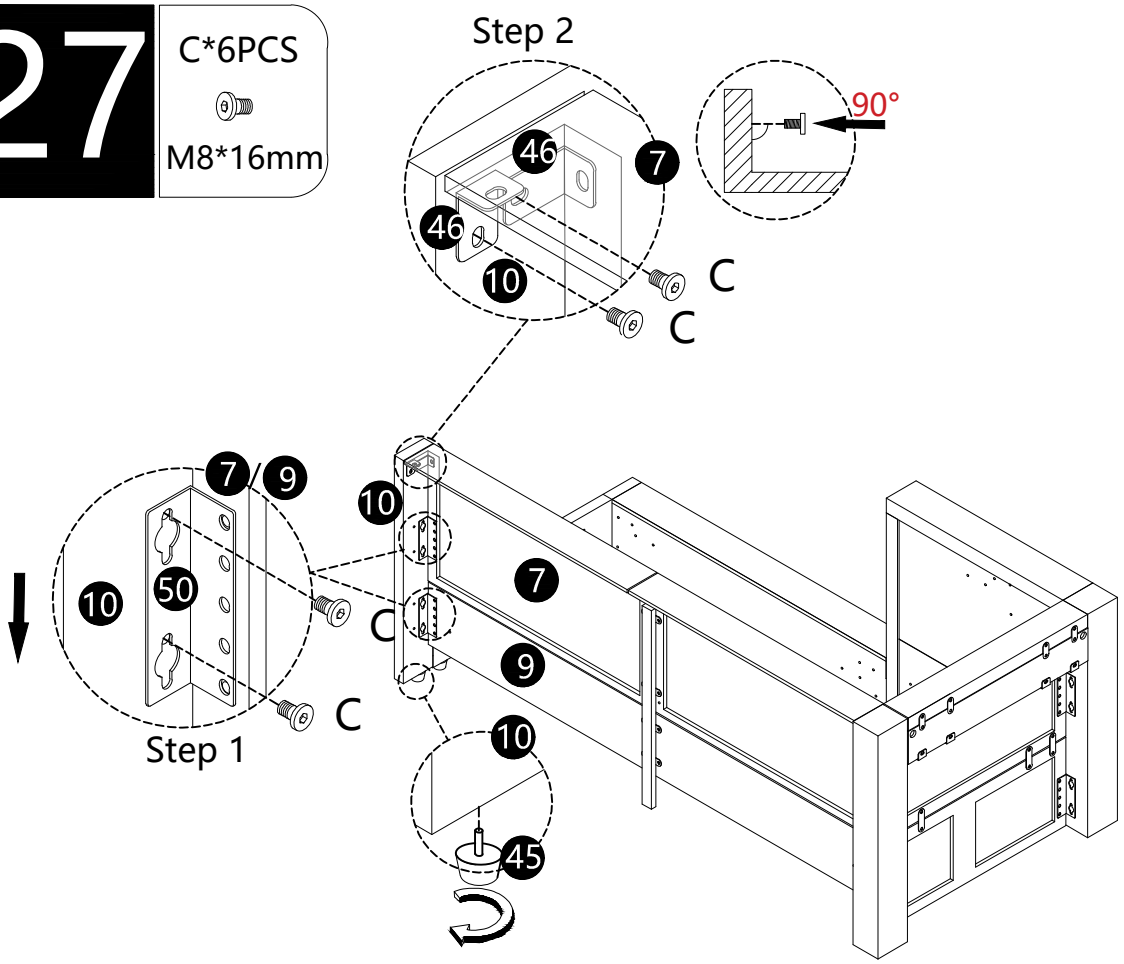

28

C*12PCS

M8*16mm

E*2PCS

M8*40mm

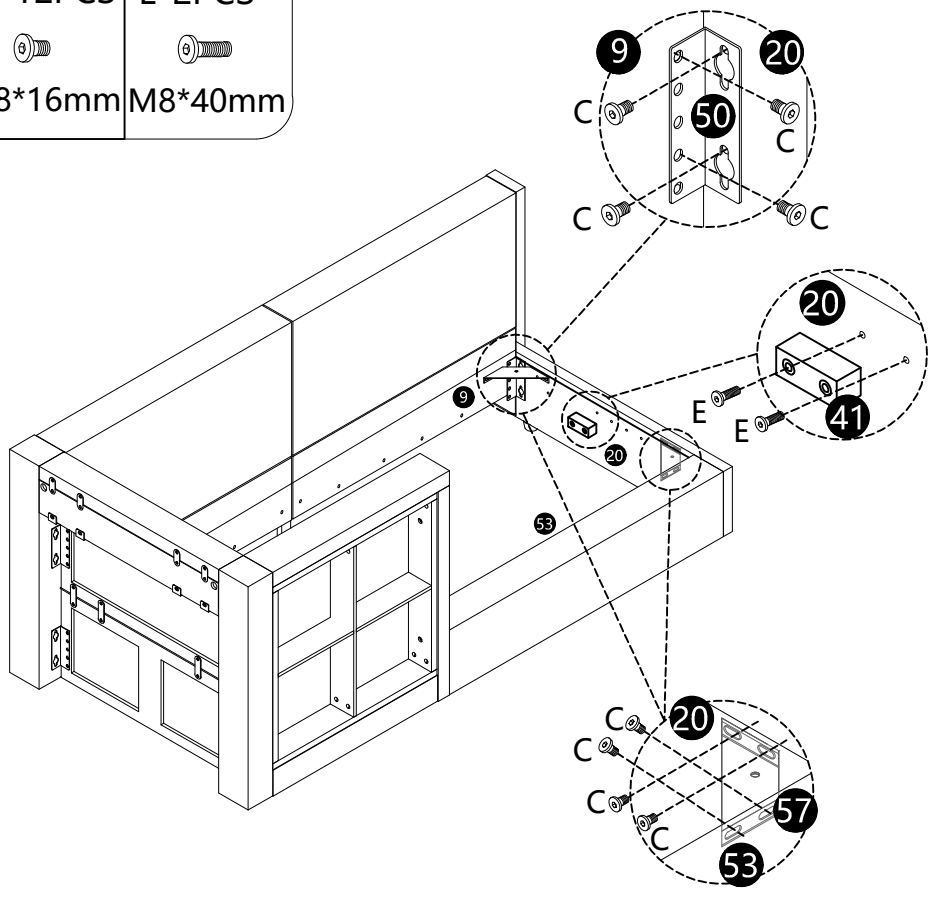

29

D*6PCS



M8*35mm

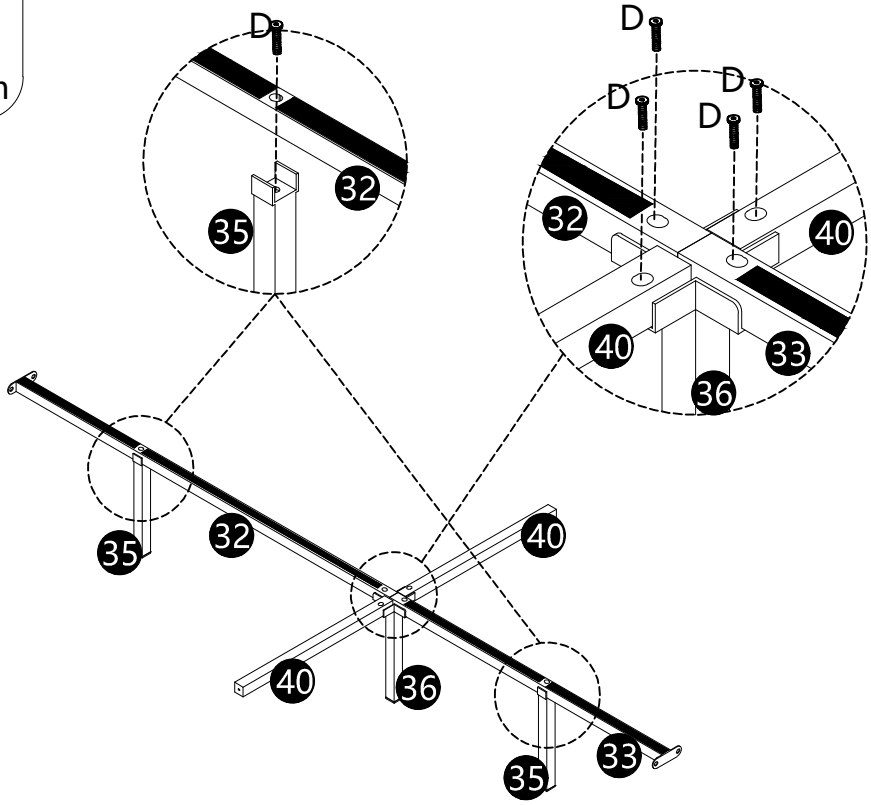

30

C*12PCS



M8*16mm

31

B*2PCS

M6*40mm

C*4PCS

M8*16mm

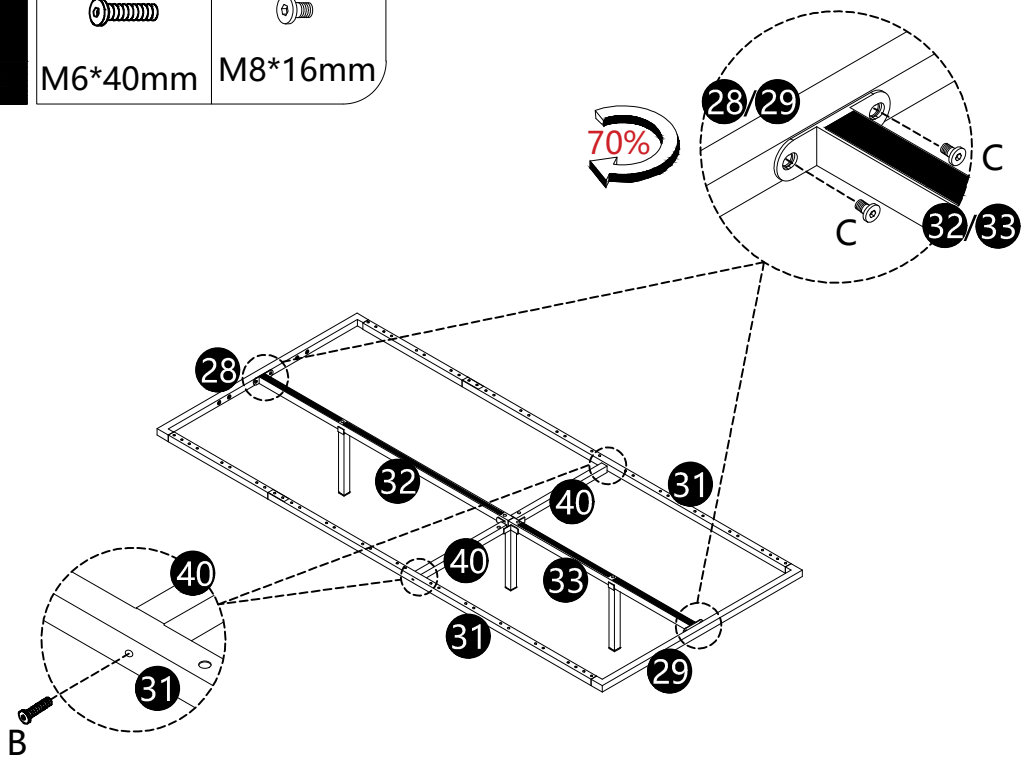

32

C*4PCS

M8*16mm

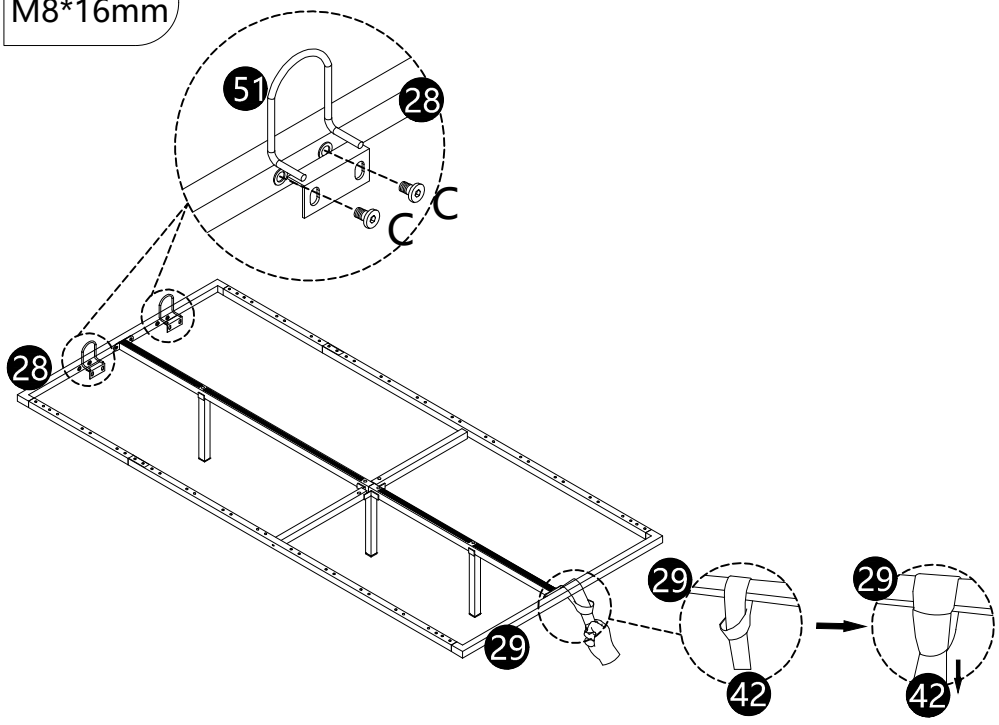

33

C*4PCS

M8*16mm

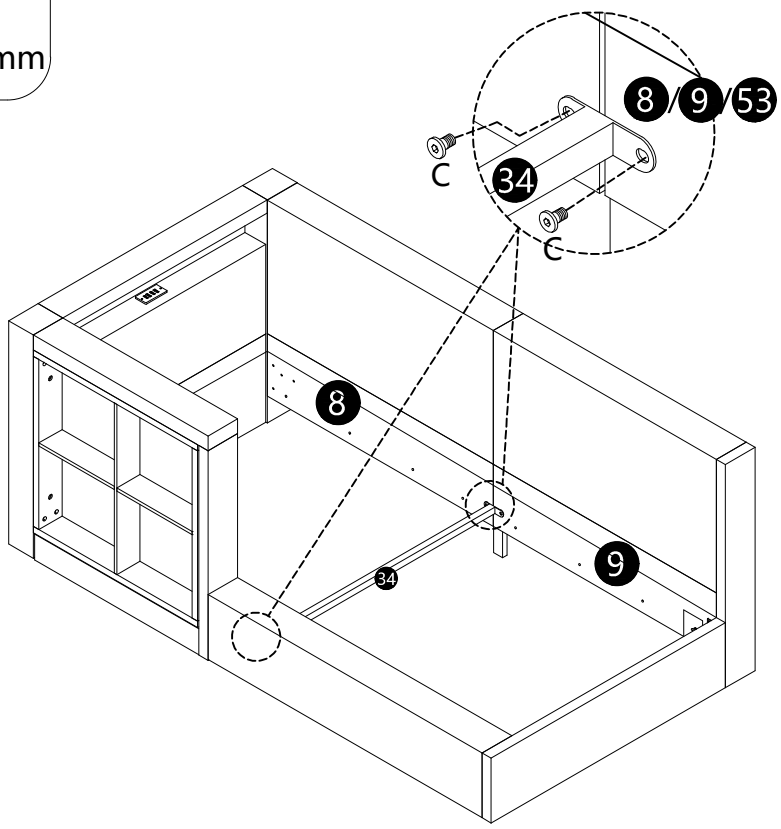

34

C*8PCS

M8*16mm

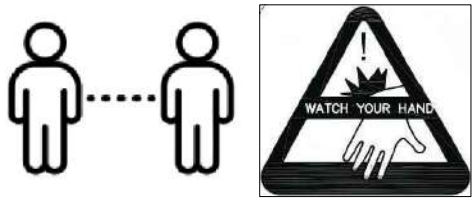

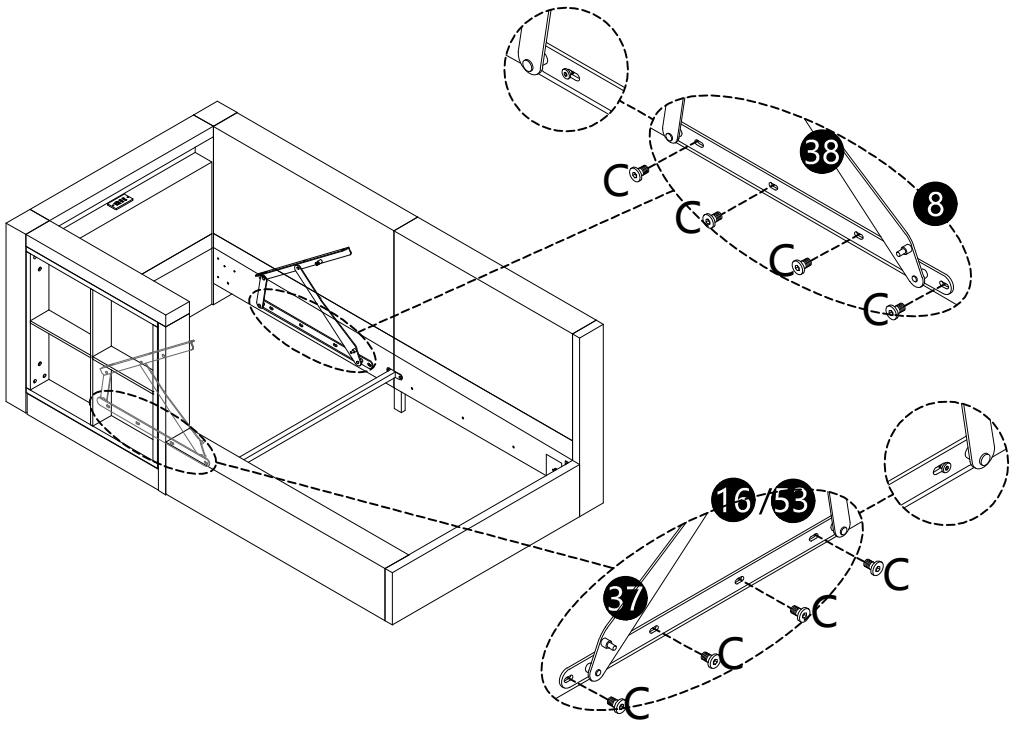

35

C*6PCS

M8*16mm



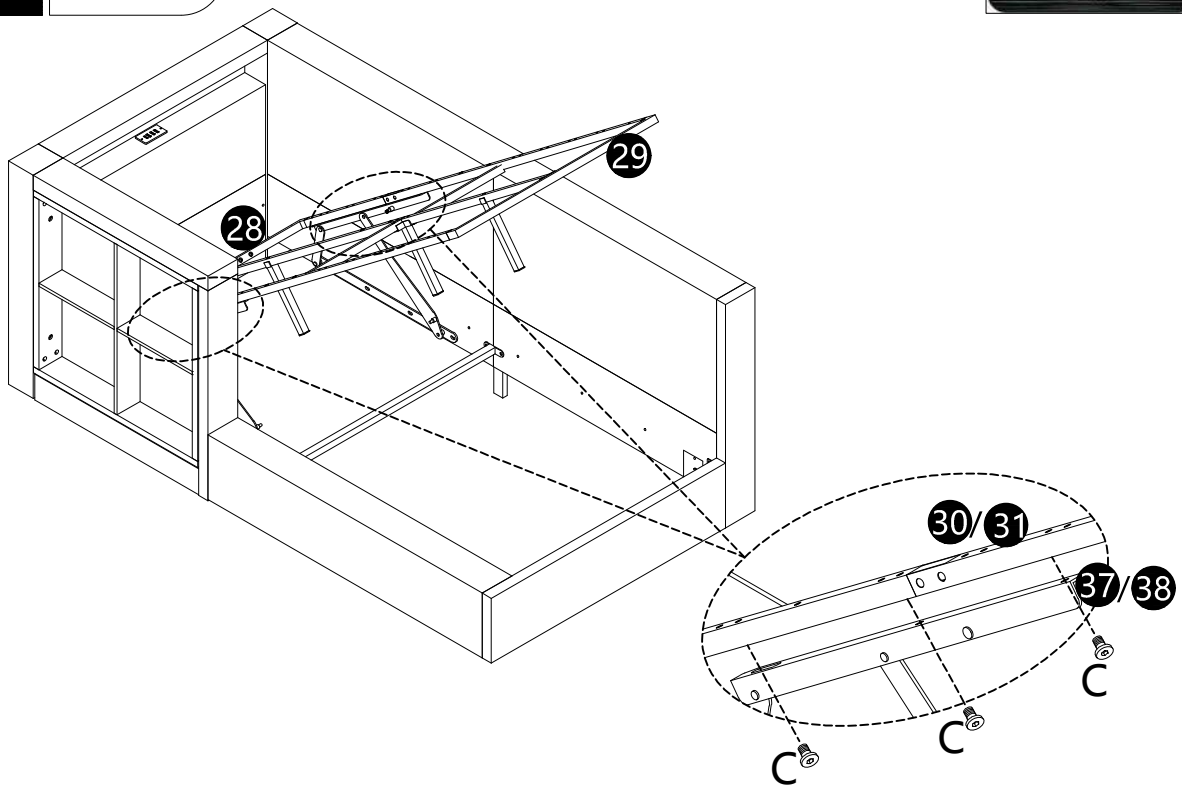

36

J*4PCS

M8

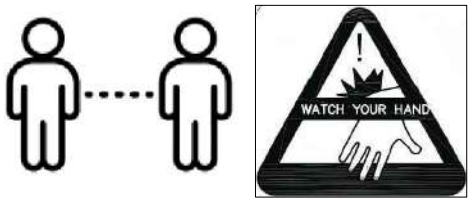

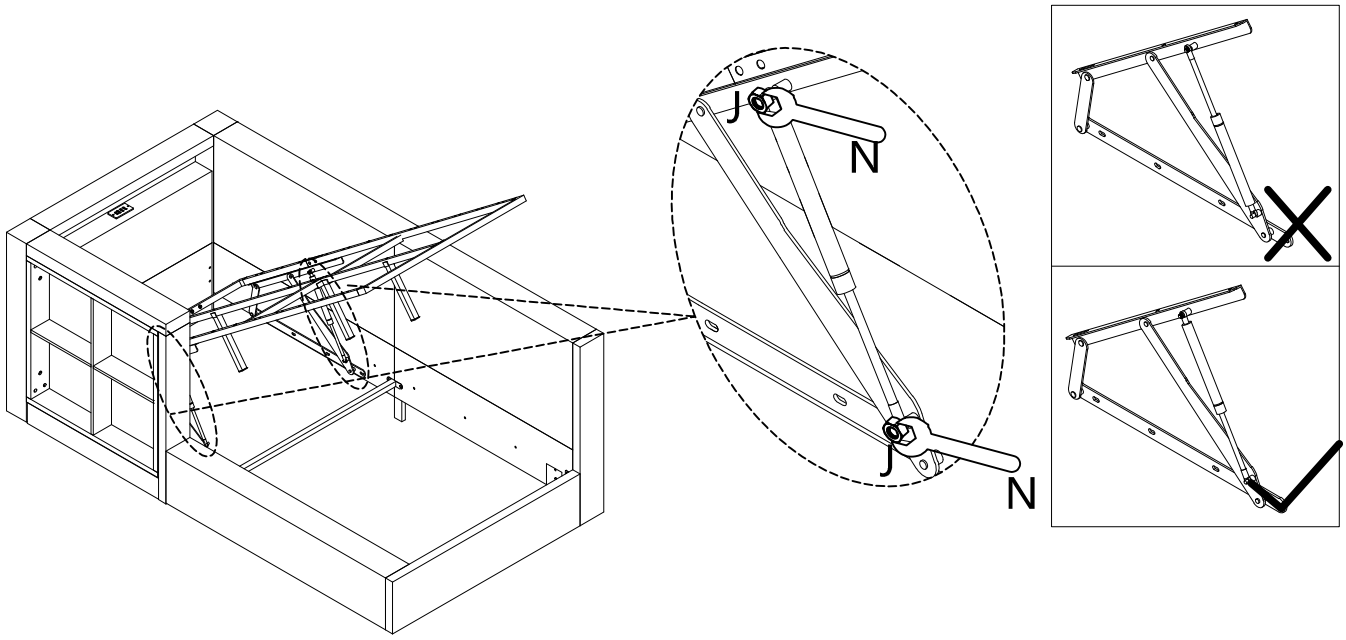

37

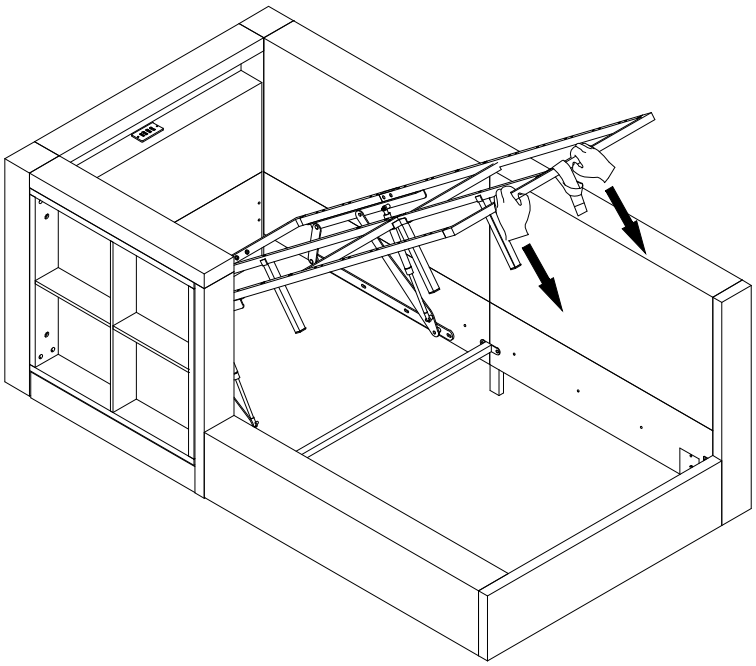

38

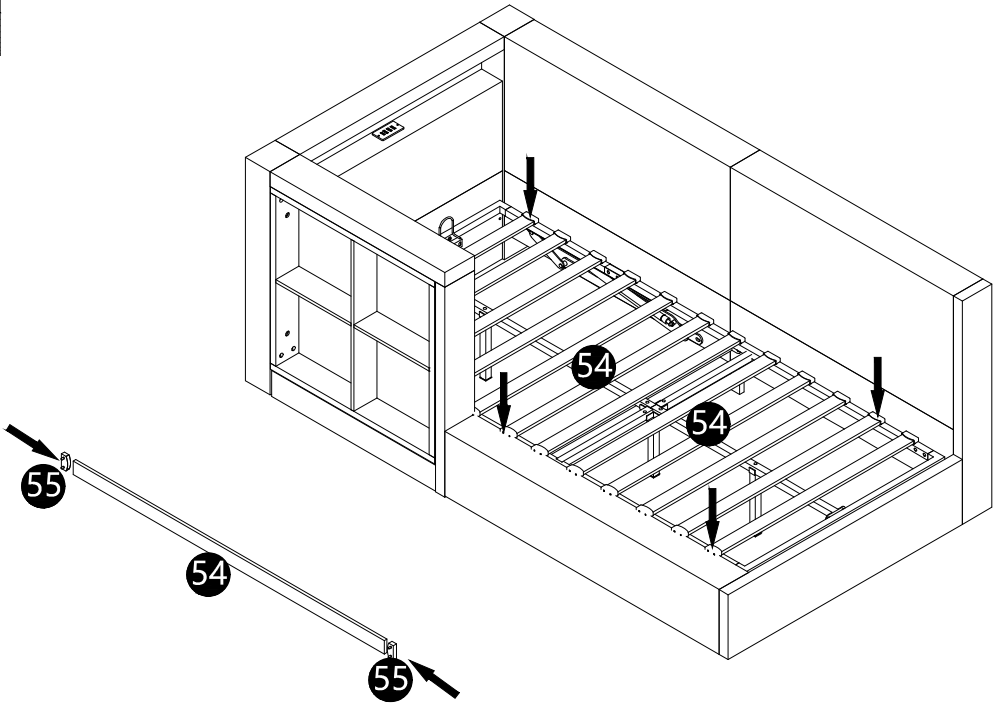

39

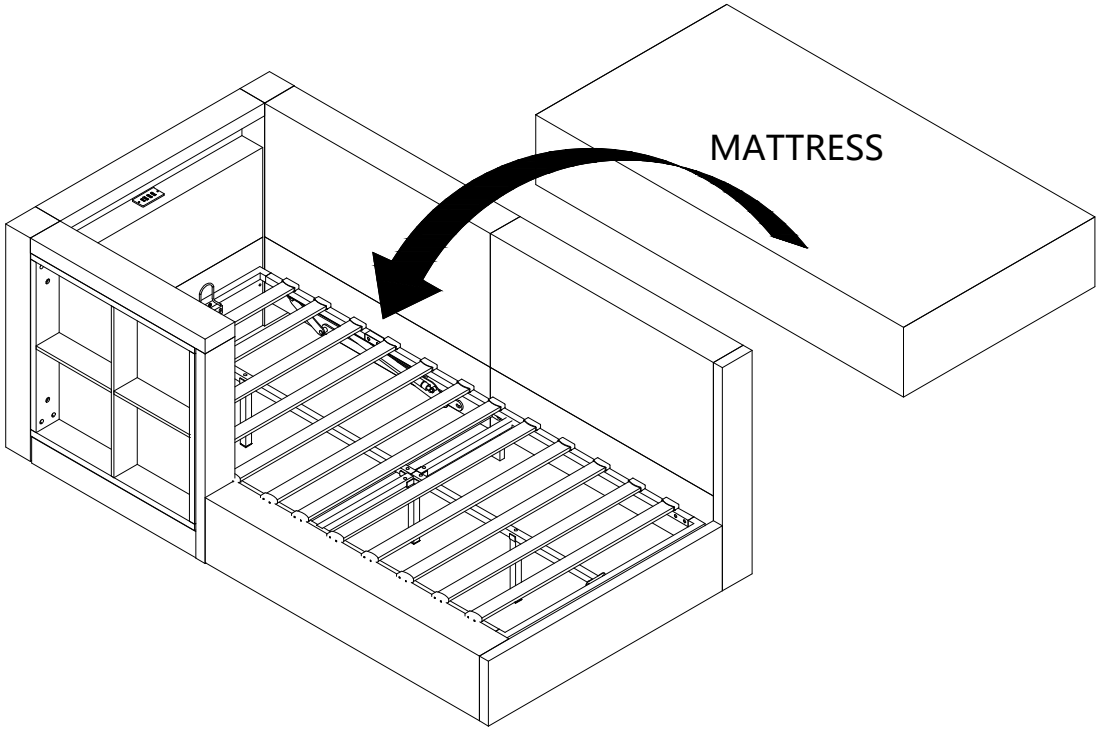

40

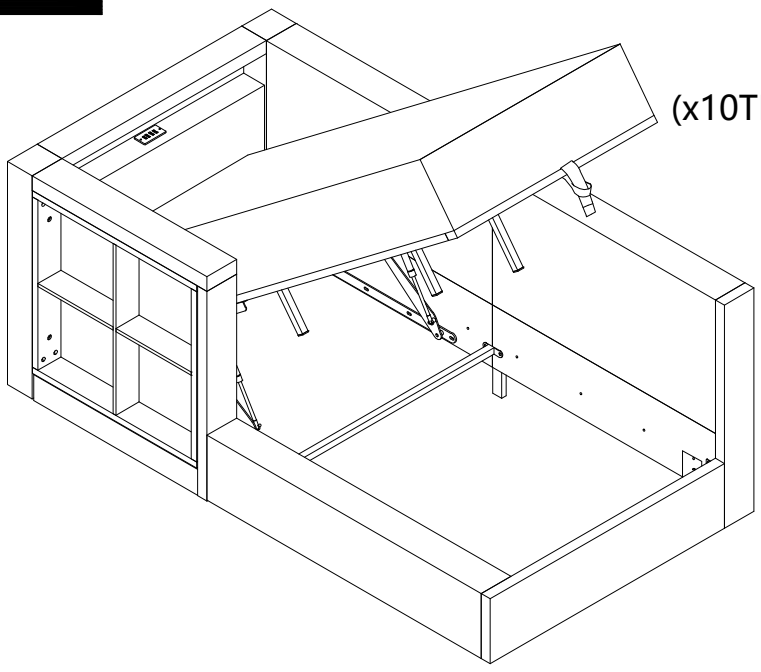

UP

(x10TIMES)

DOWN

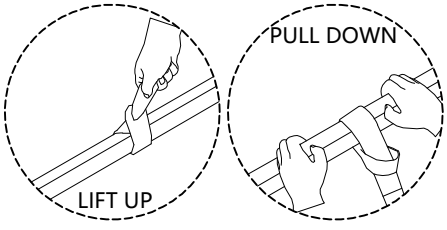

41

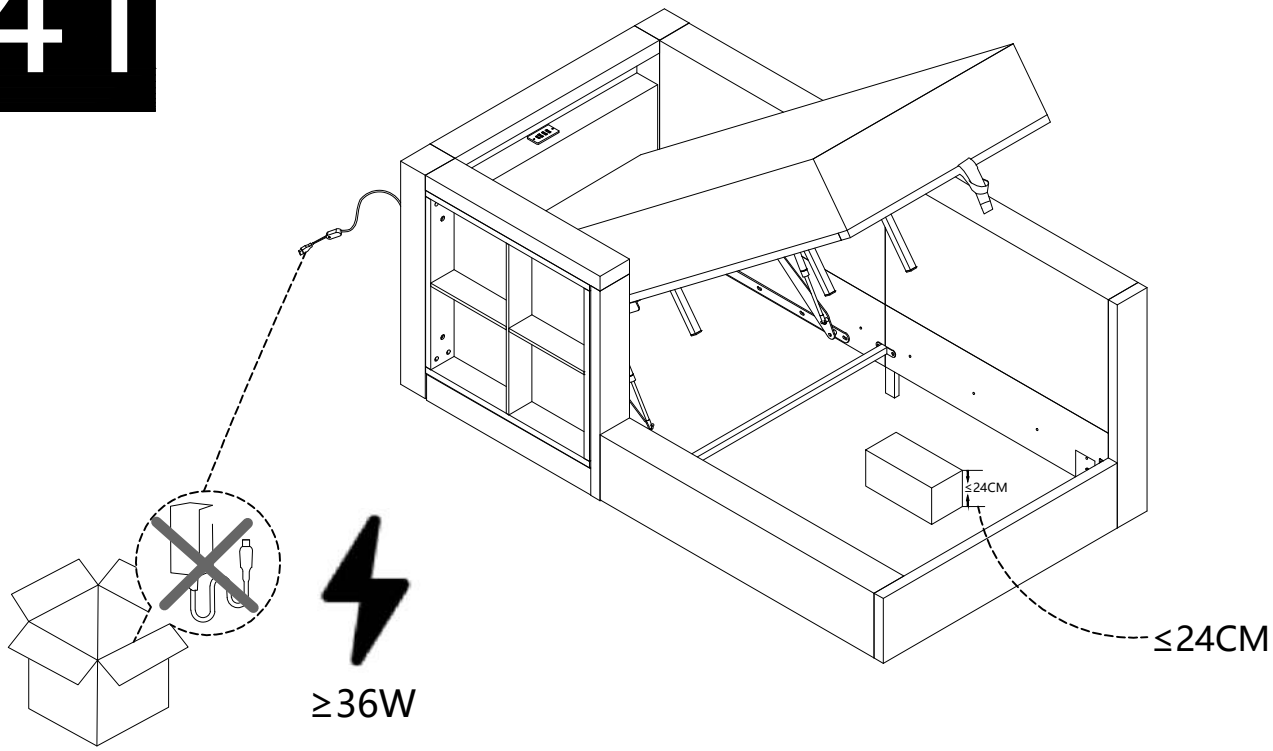

42

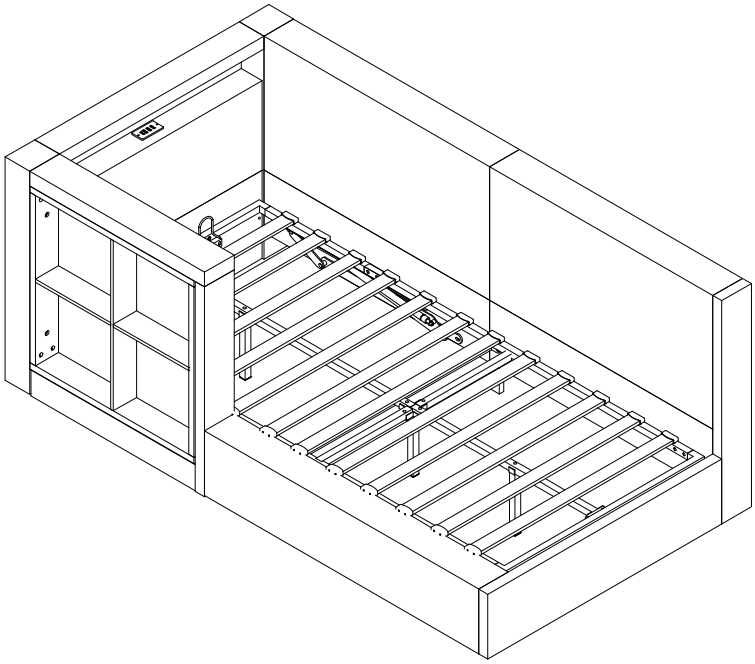

R:

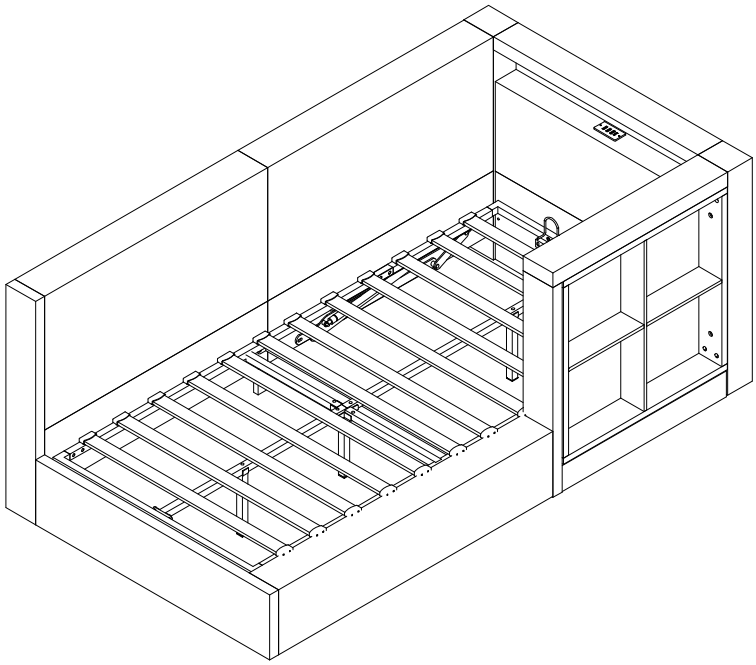

Type2

Page:24-42

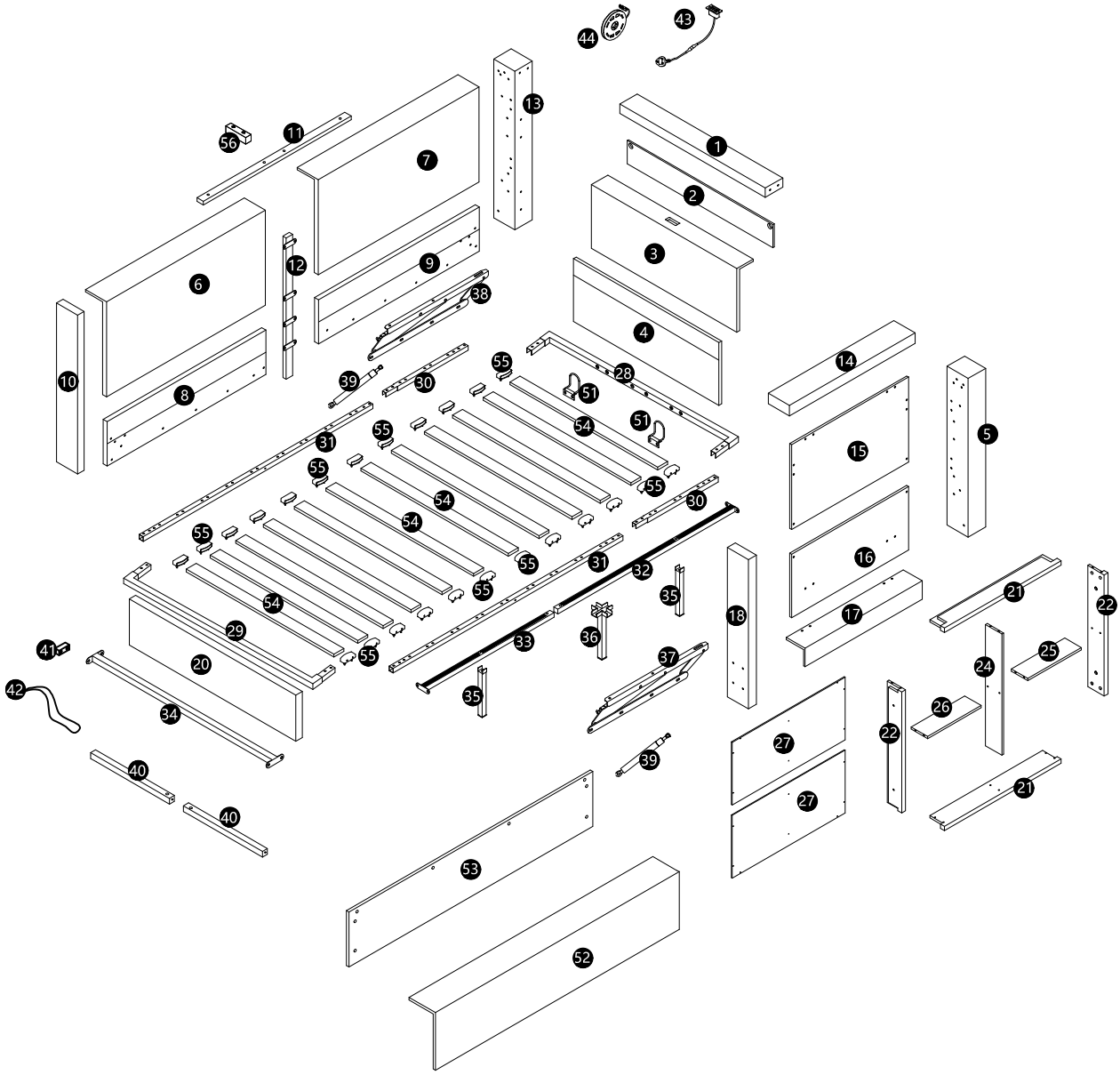
44
43
13
56
11
7
1
2
3
6
12
9
38
4
10
8
39
30
55
28
51
14
5
31
54
15
16
32
35
18
17
21
22
29
20
33
36
37
24
25
41
42
34
26
27
40
53
52

Type2

1 F*2PCS



M3*12mm

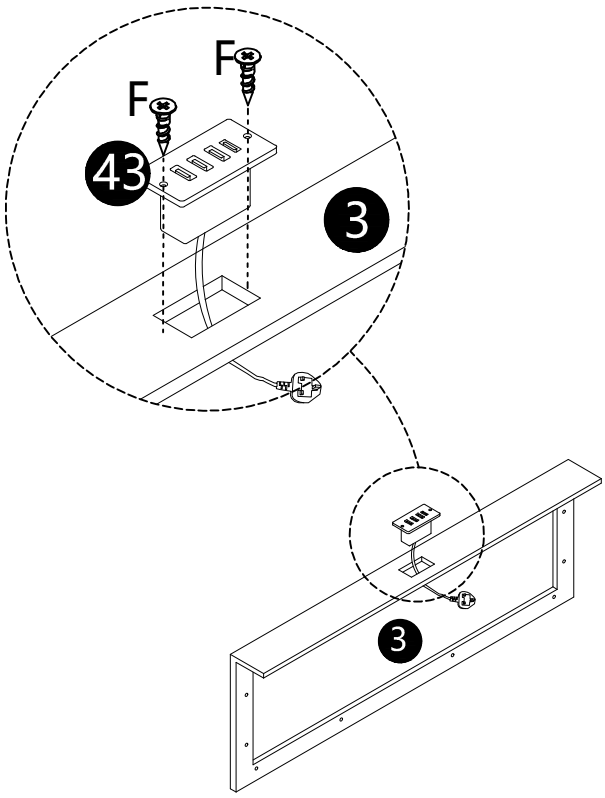

2 C*8PCS



M8*16mm

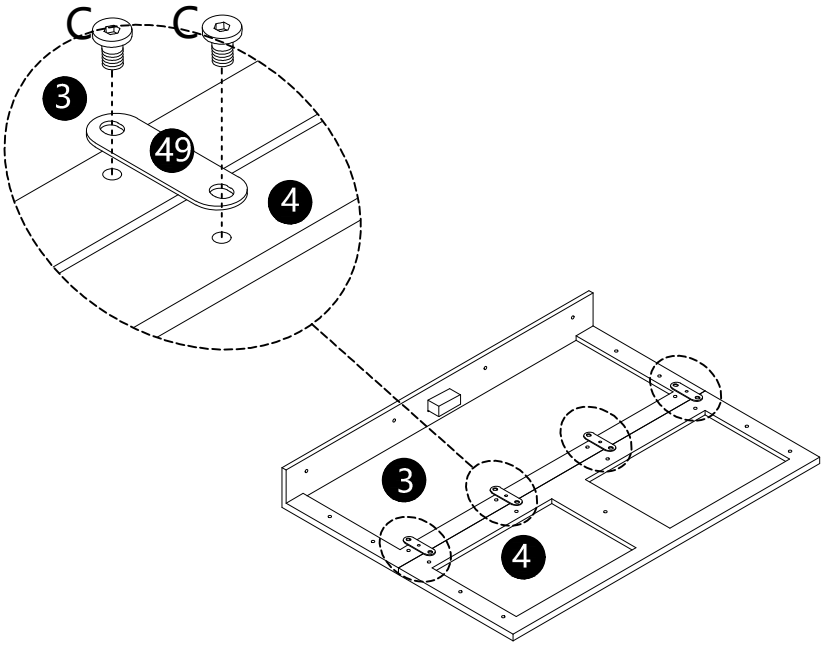

3

C*8PCS

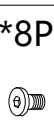

M8*16mm

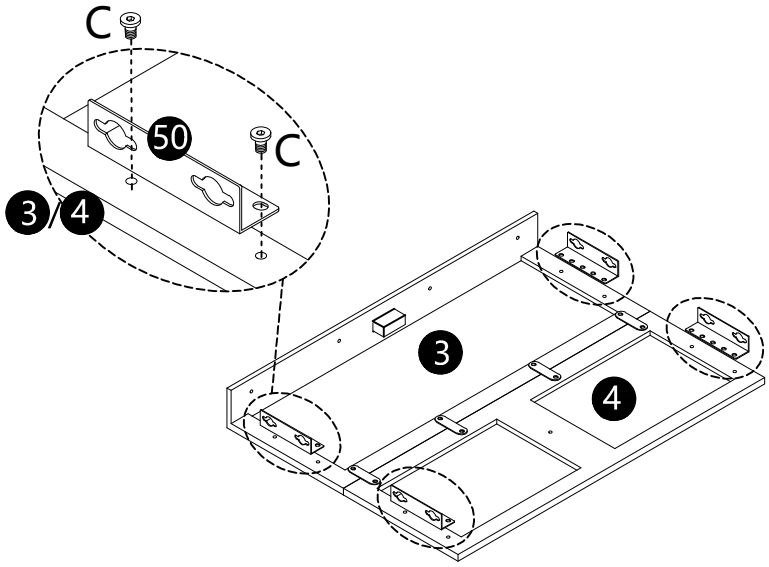

4

C*8PCS	D*4PCS	Q*4PCS
		
M8*16mm	M8*35mm	ø8*22MM

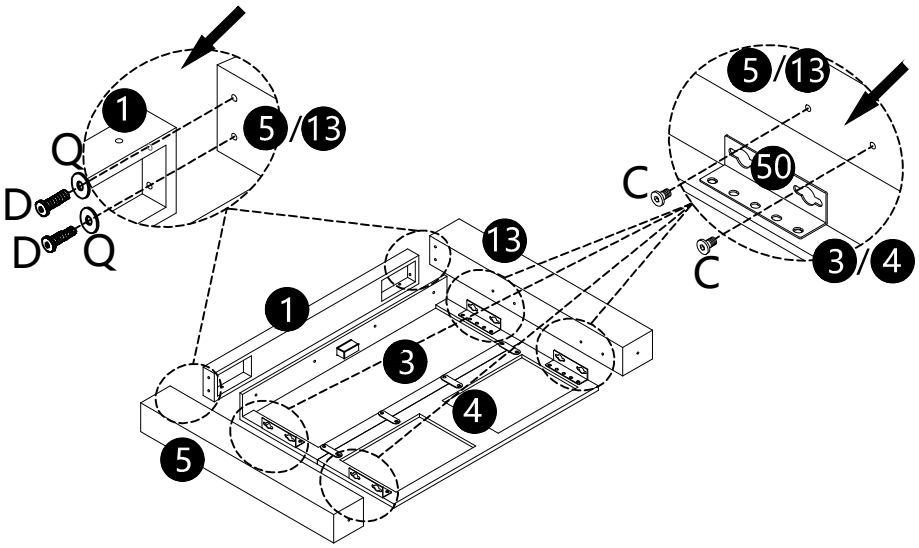

5

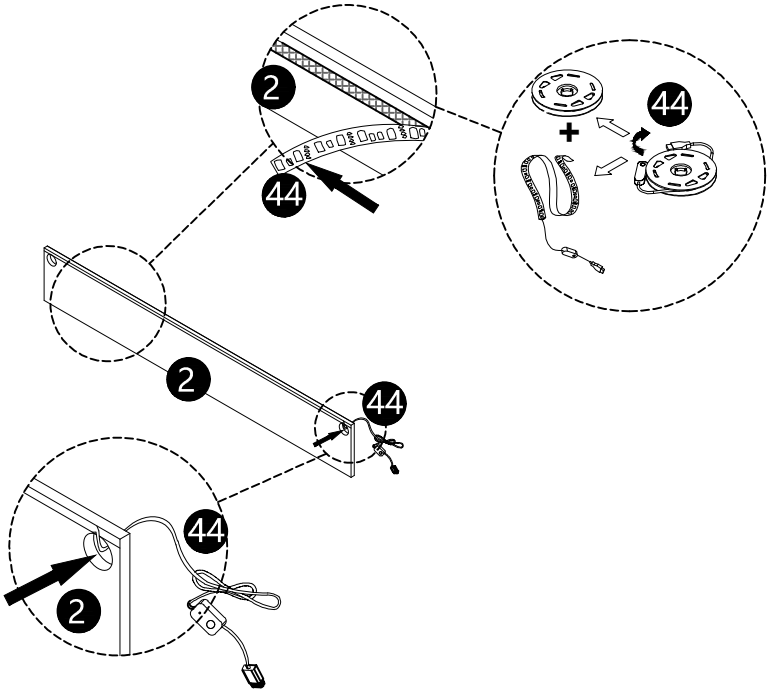

6

C*16PCS

M8*16mm

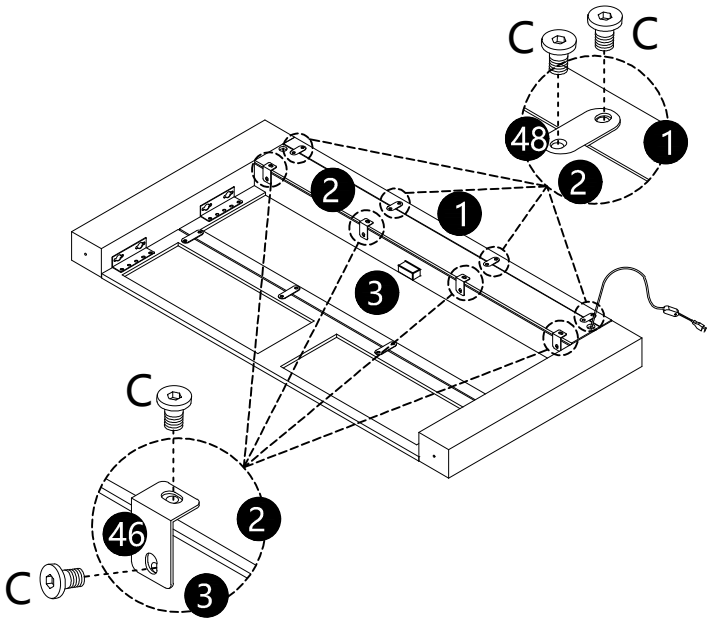

7

C*6PCS

M8*16mm

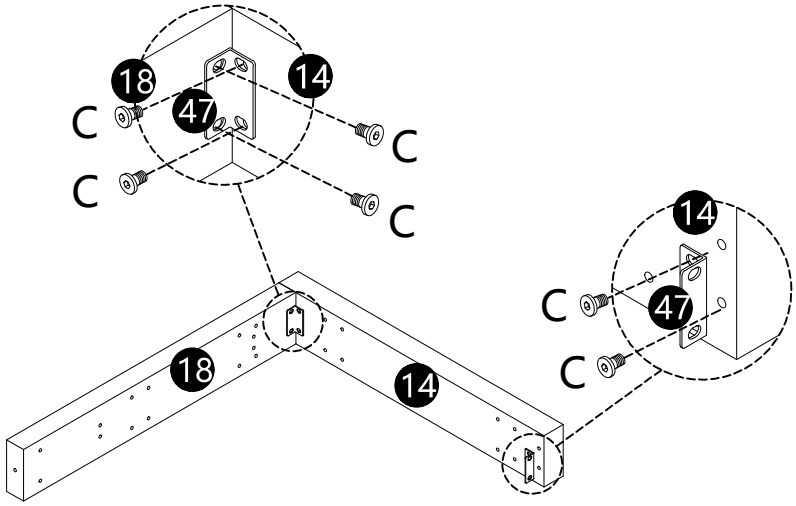

8

C*8PCS

M8*16mm

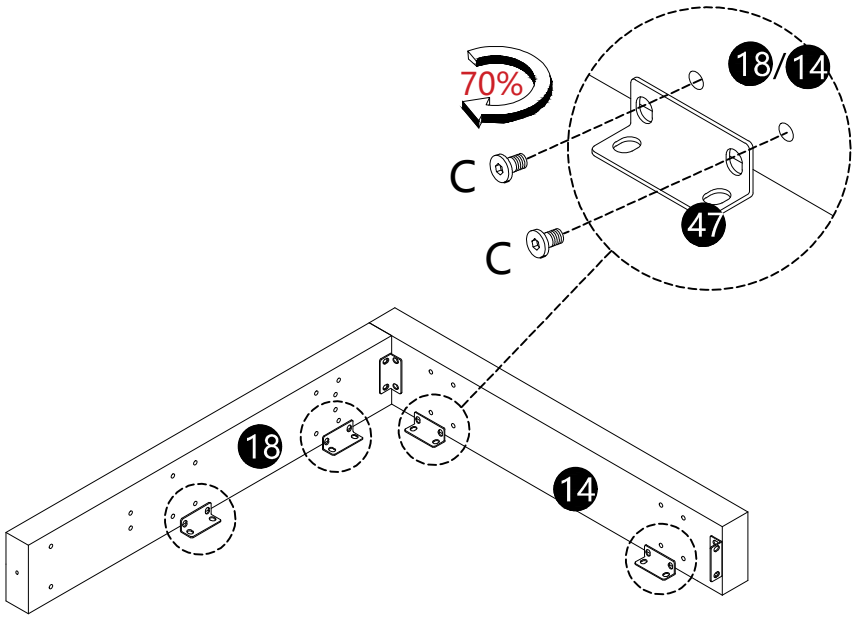

9

C*3PCS



M8*16mm

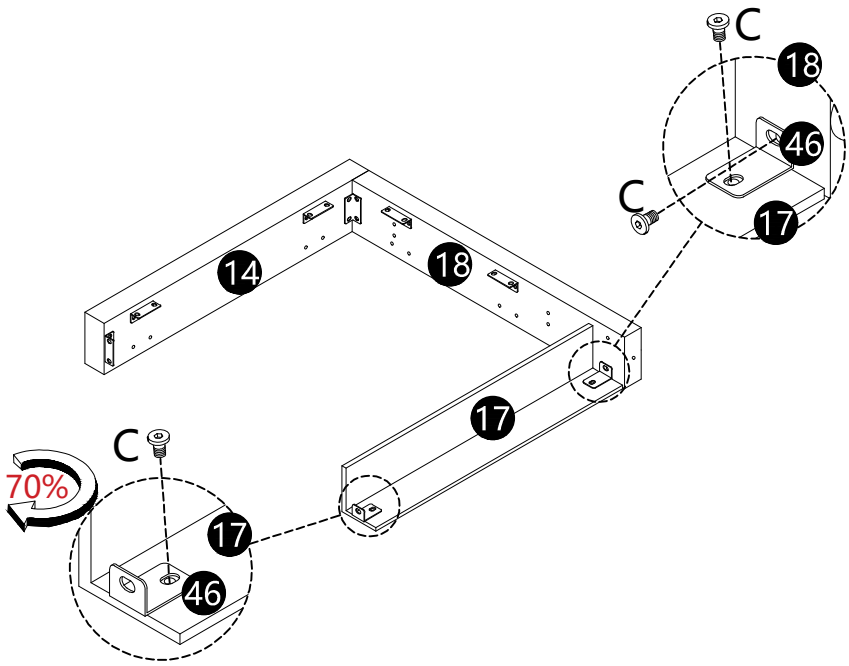

10

C*20PCS



M8*16mm

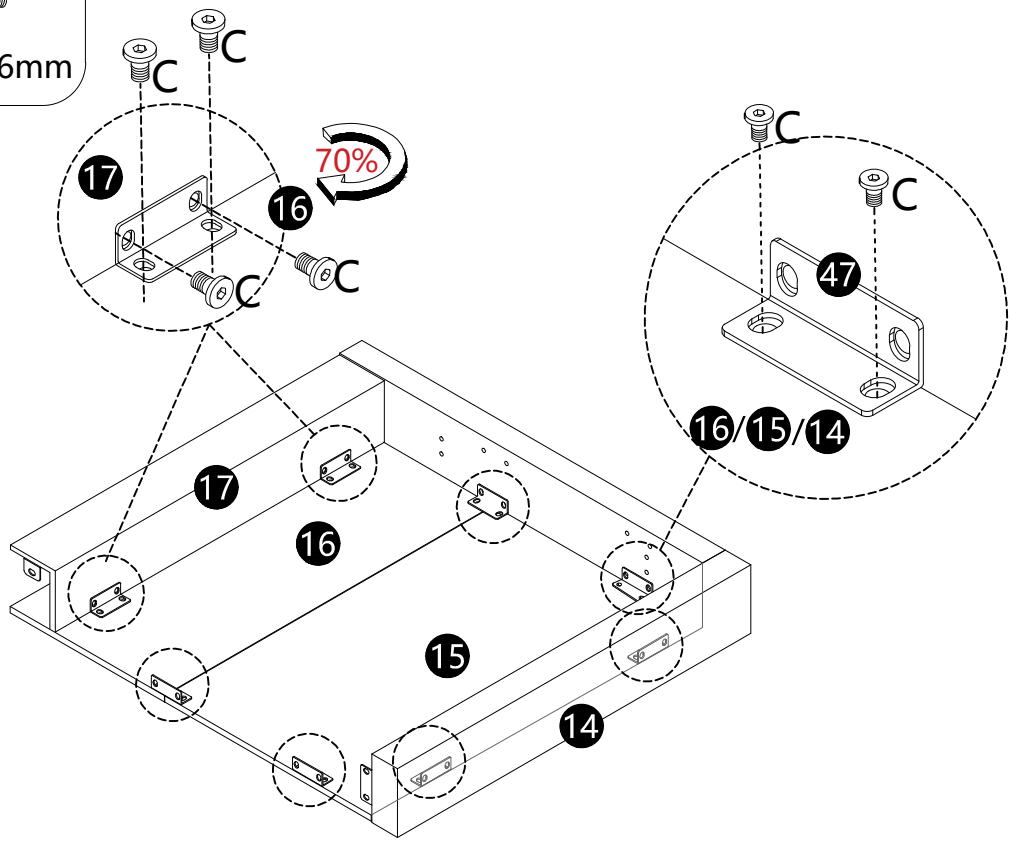

11

C*7PCS

M8*16mm

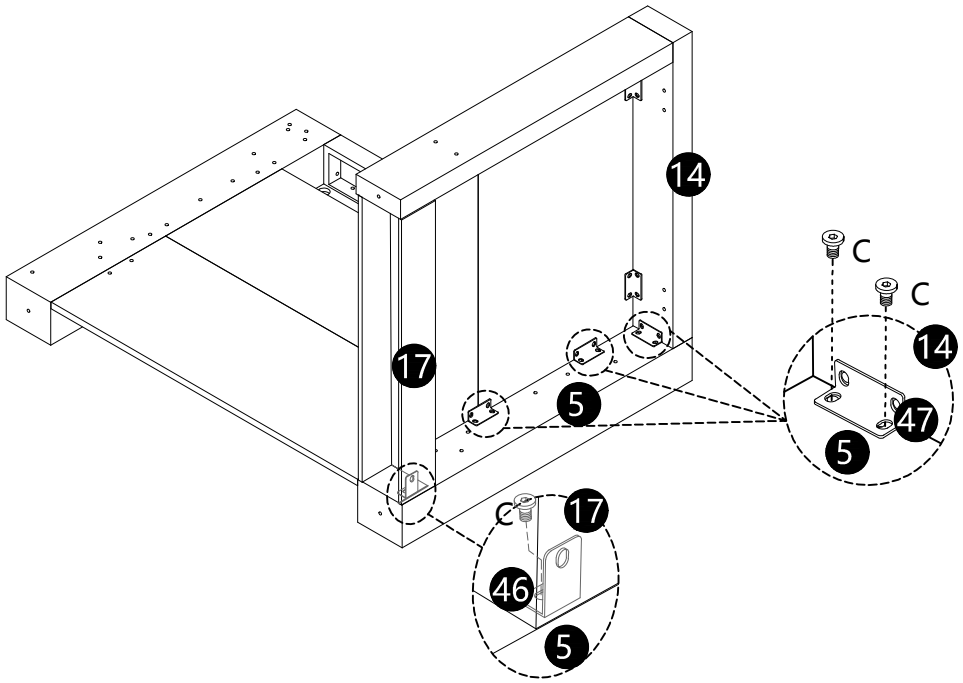

12

H*8PCS

M6*35mm

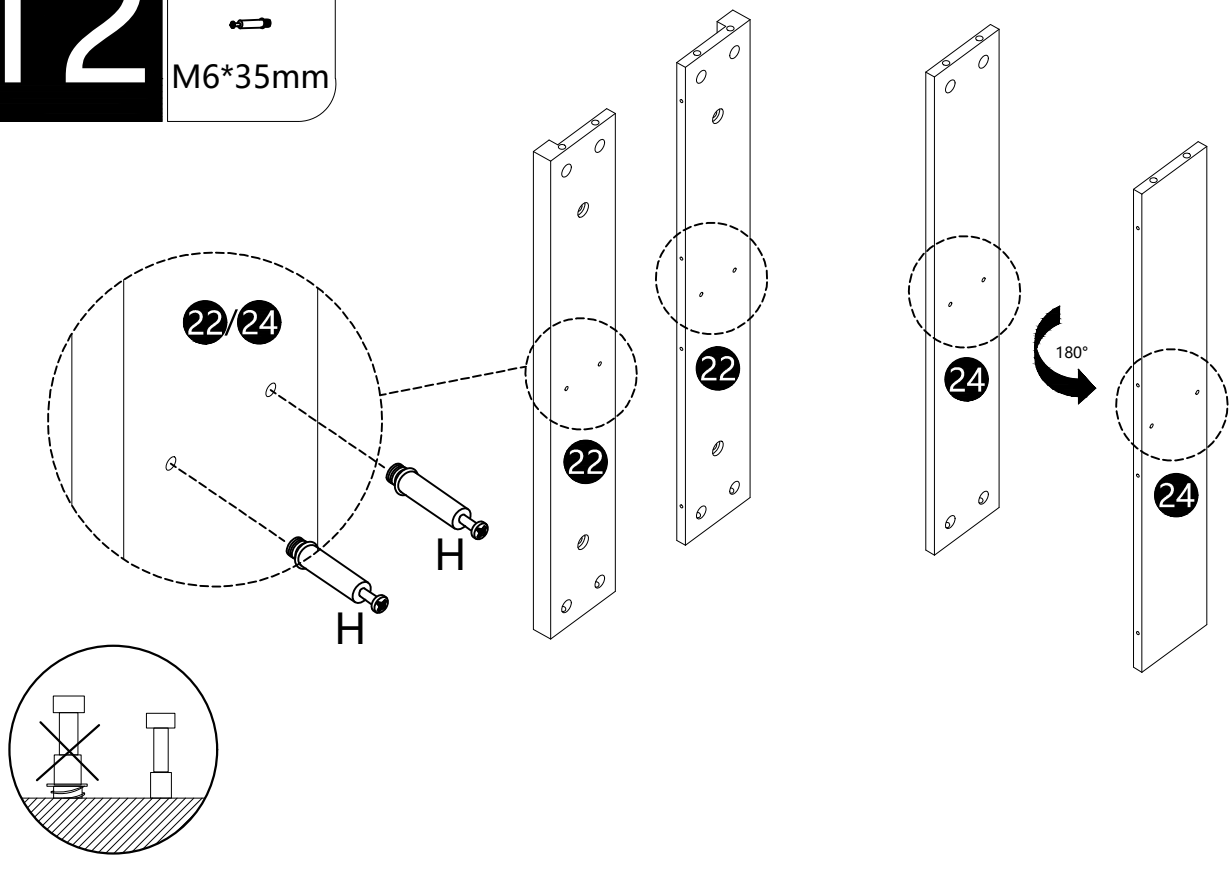

13

H*12PCS

M6*35mm

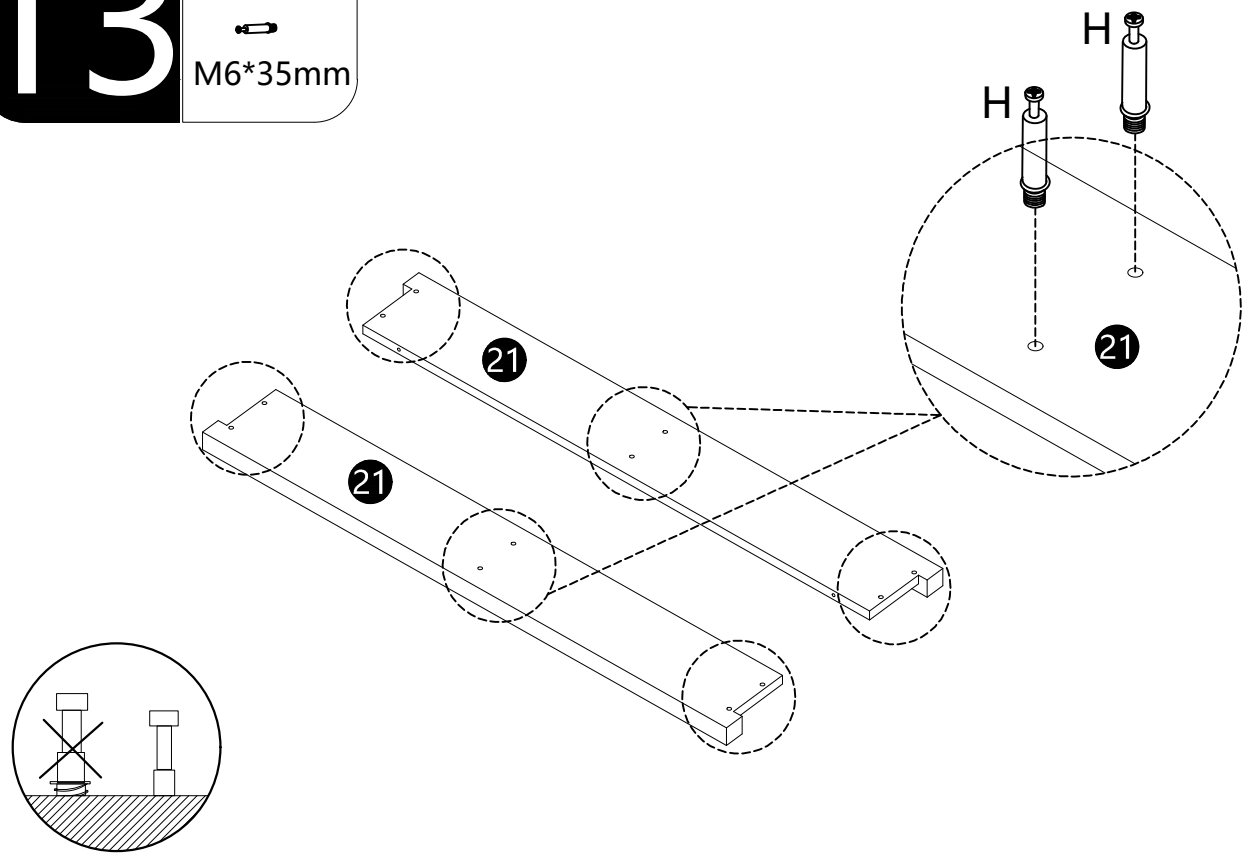

14

G*4PCS

M9*15mm

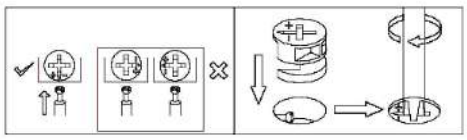

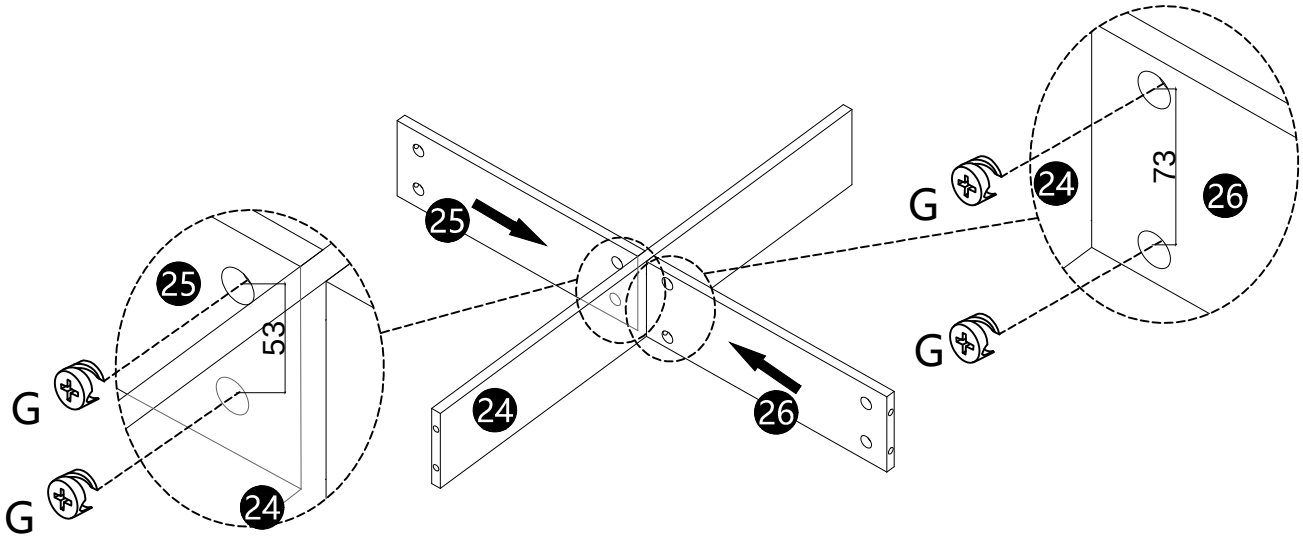

15

G*2PCS

M9*15mm

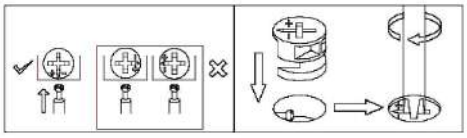

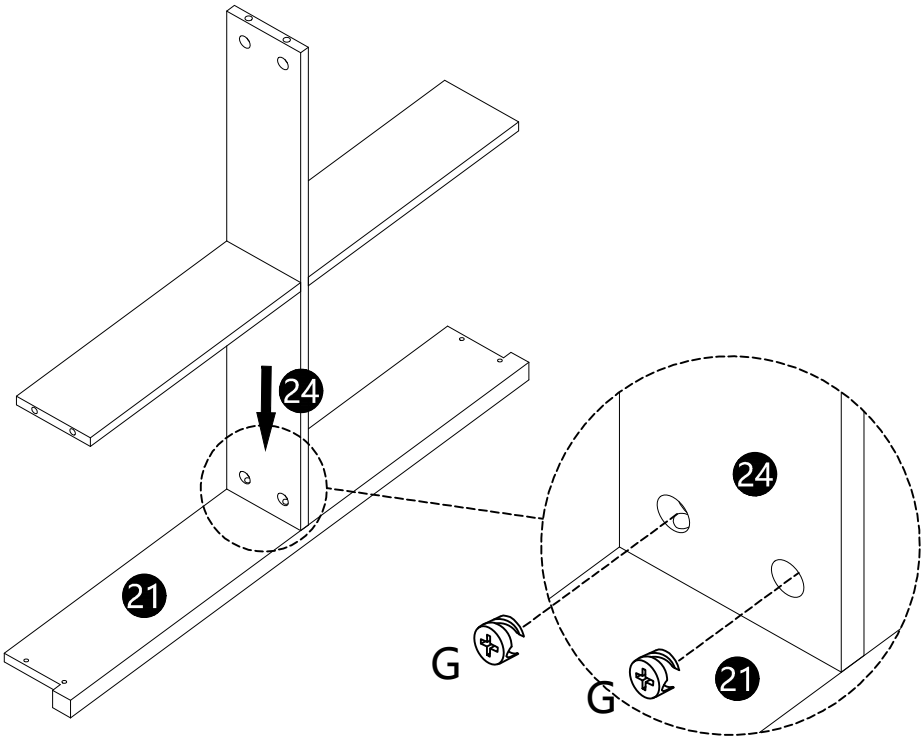

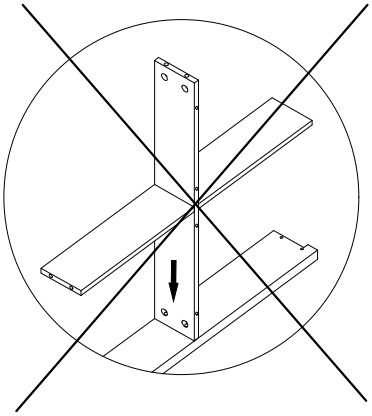

16

G*8PCS

M9*15mm

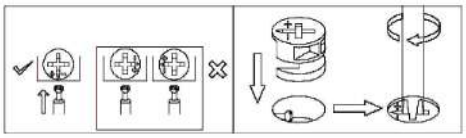

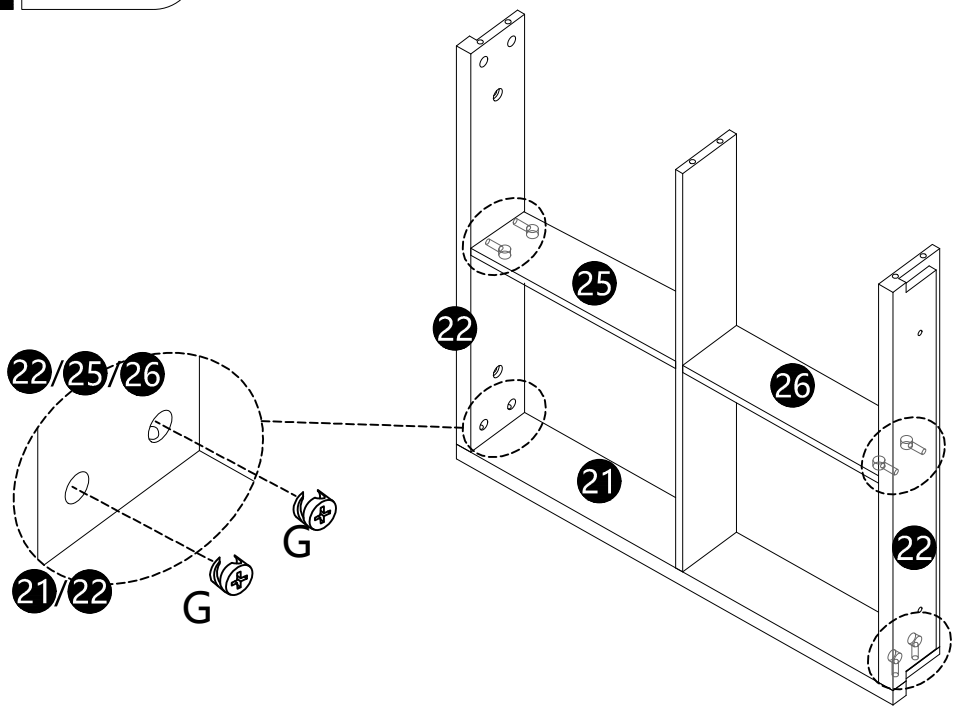

17

G*6PCS

M9*15mm

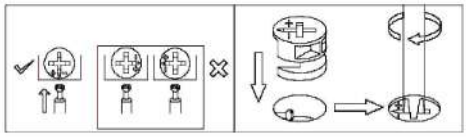

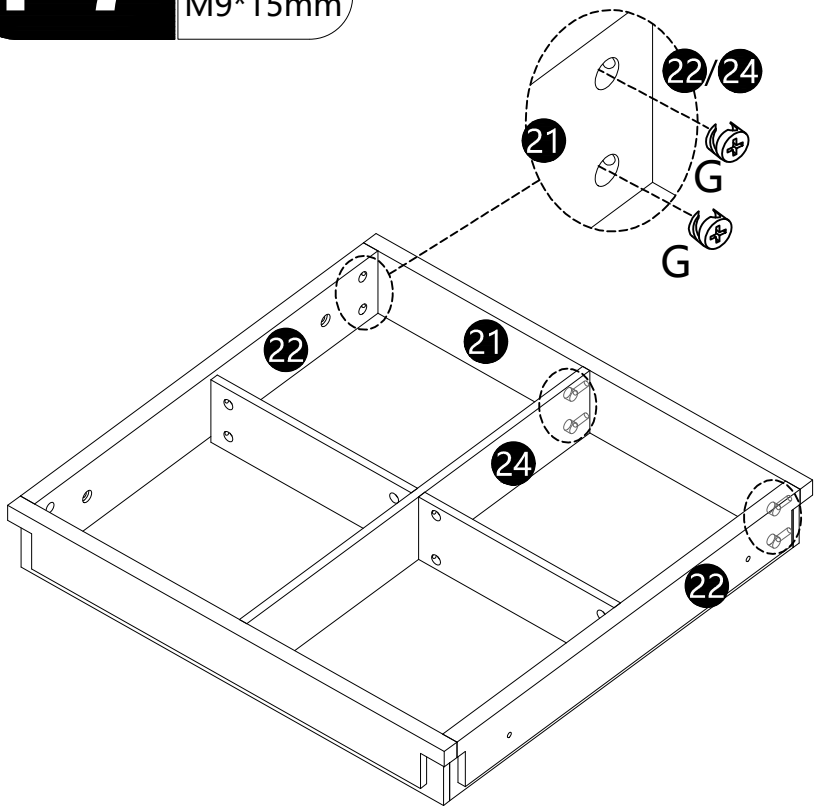

18

A*16PCS

M5*40mm

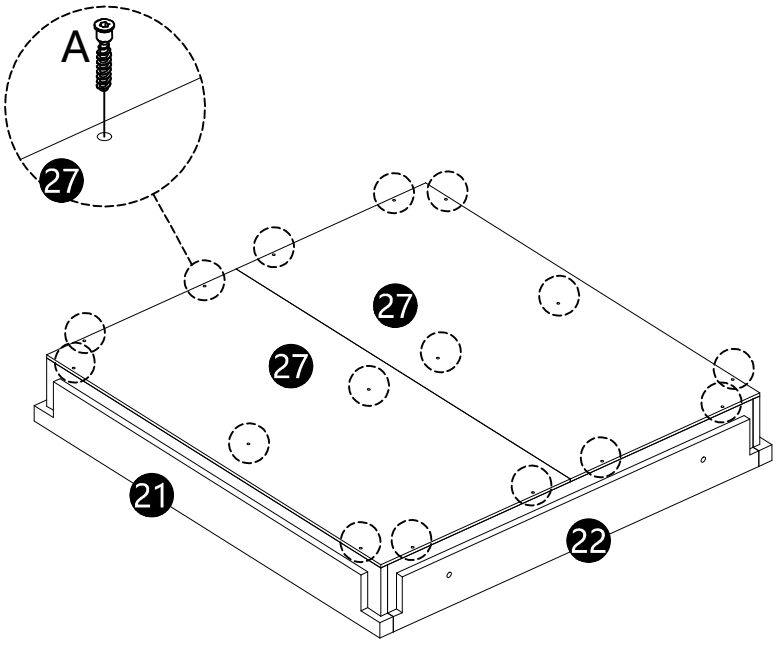

19

E*4PCS



M8*35mm

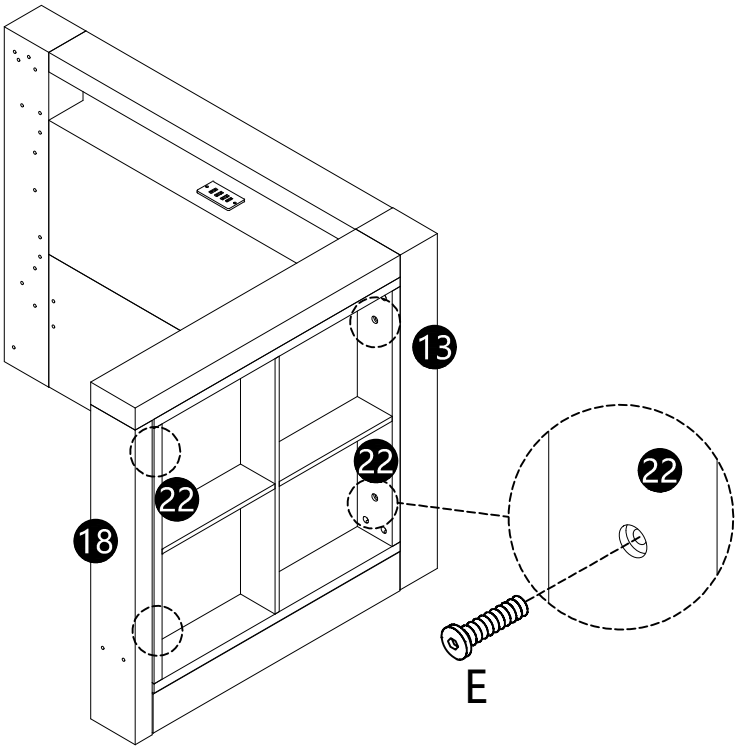

20

C*12PCS



M8*16mm

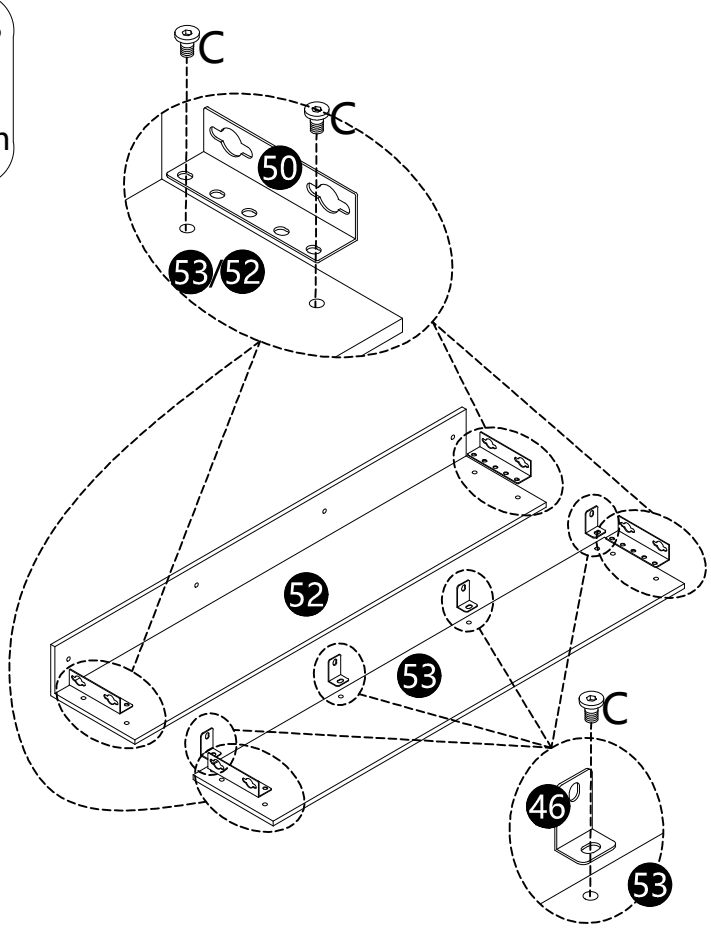

21

C*4PCS

M8*16mm

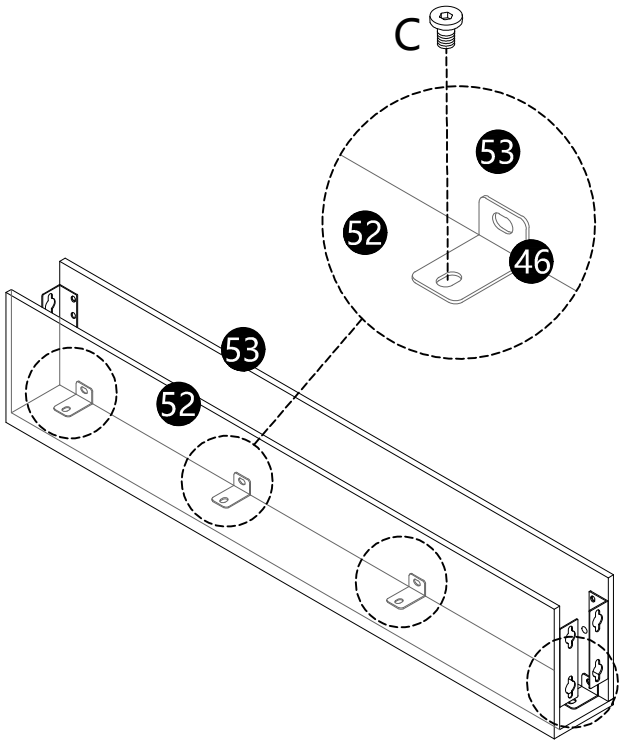

22

D*8PCS



M8*35mm

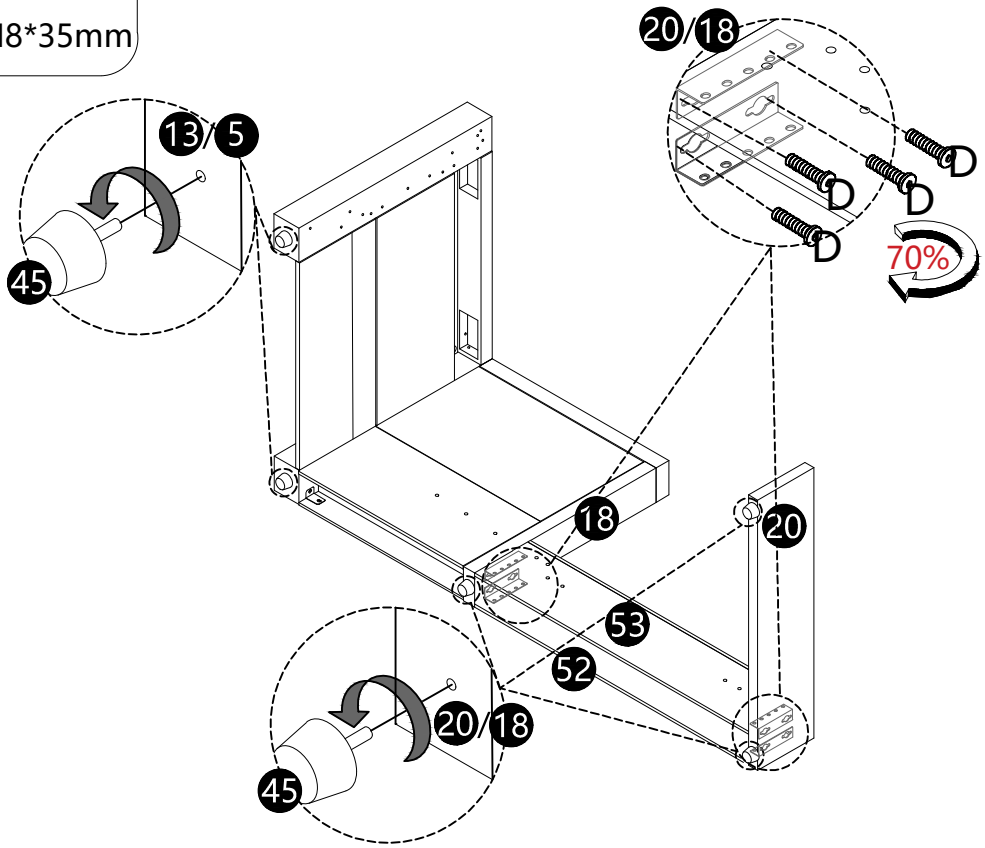

23

C*8PCS

M8*16mm

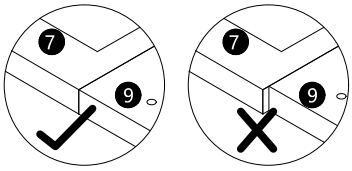

24

R*4PCS



M8*30mm

I*2PCS



M8*95mm

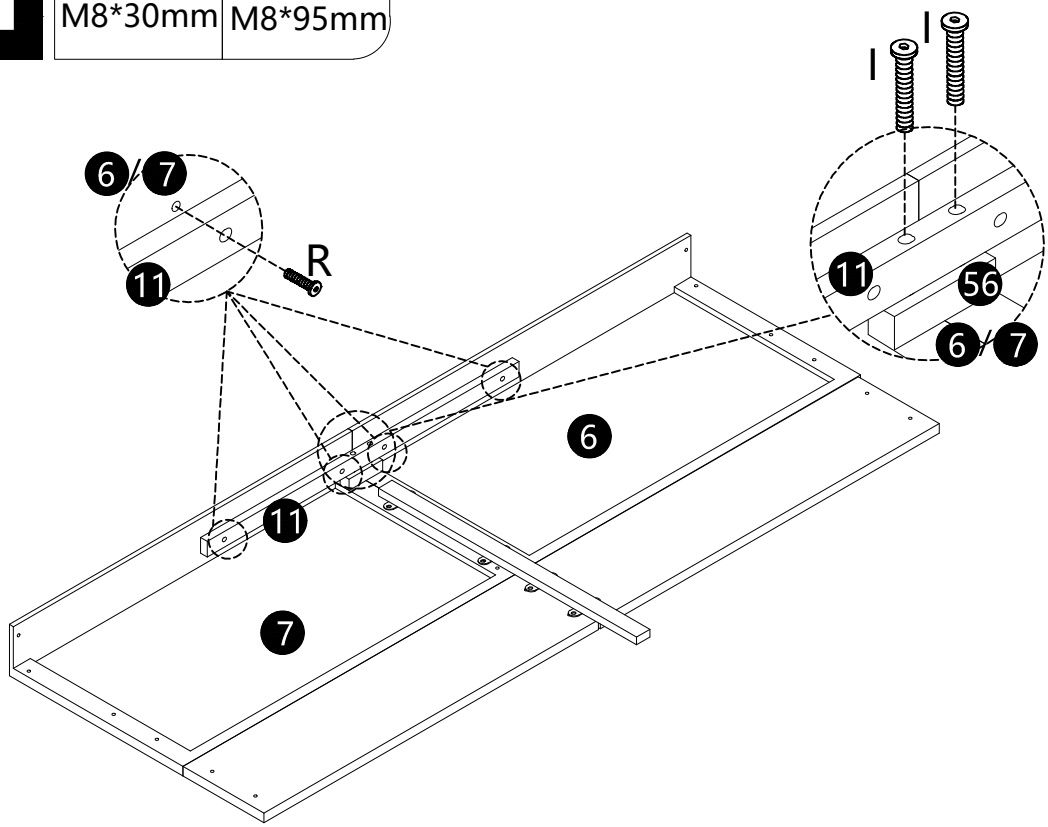

25

C*12PCS



M8*16mm

26

C*6PCS



M8*16mm

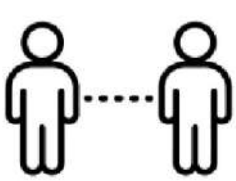



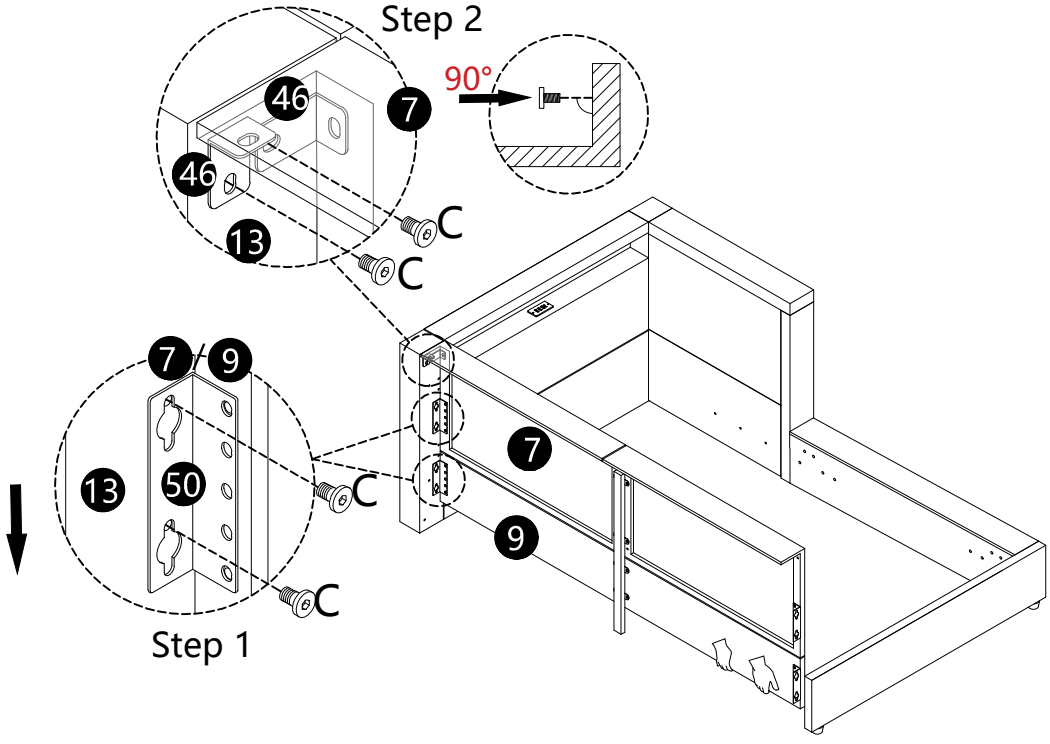

27

C*6PCS

M8*16mm

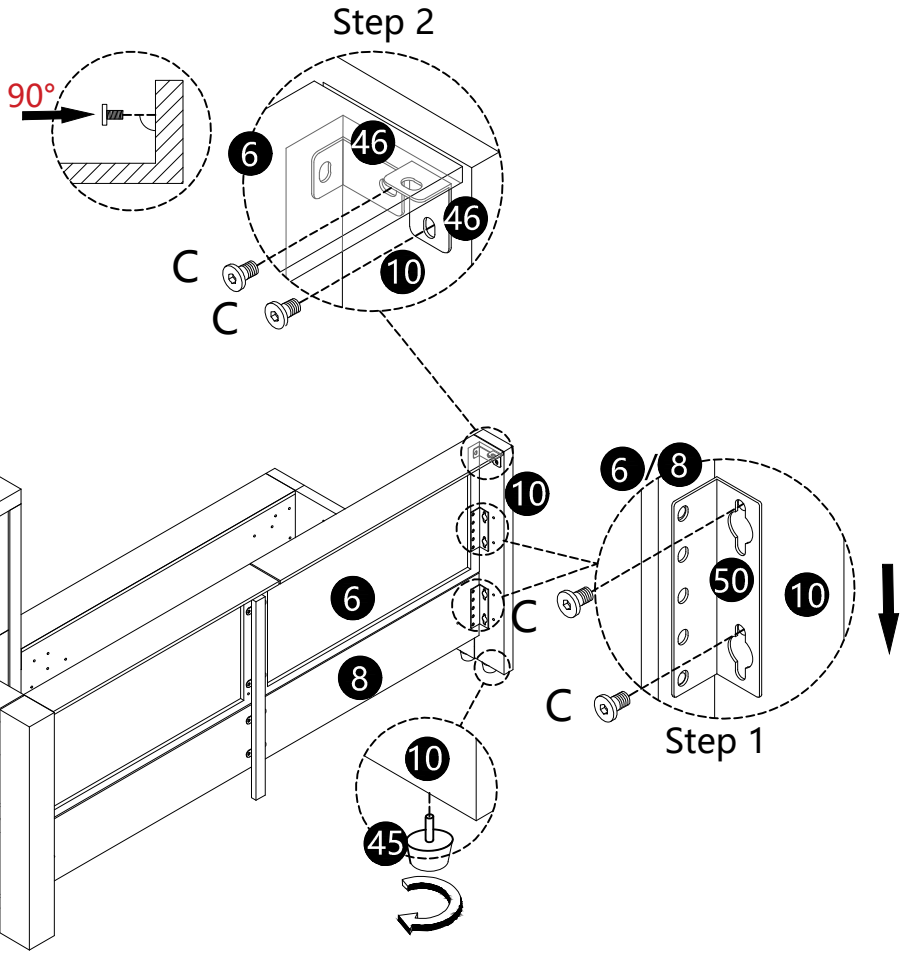

28

C*12PCS

M8*16mm

E*2PCS

M8*40mm

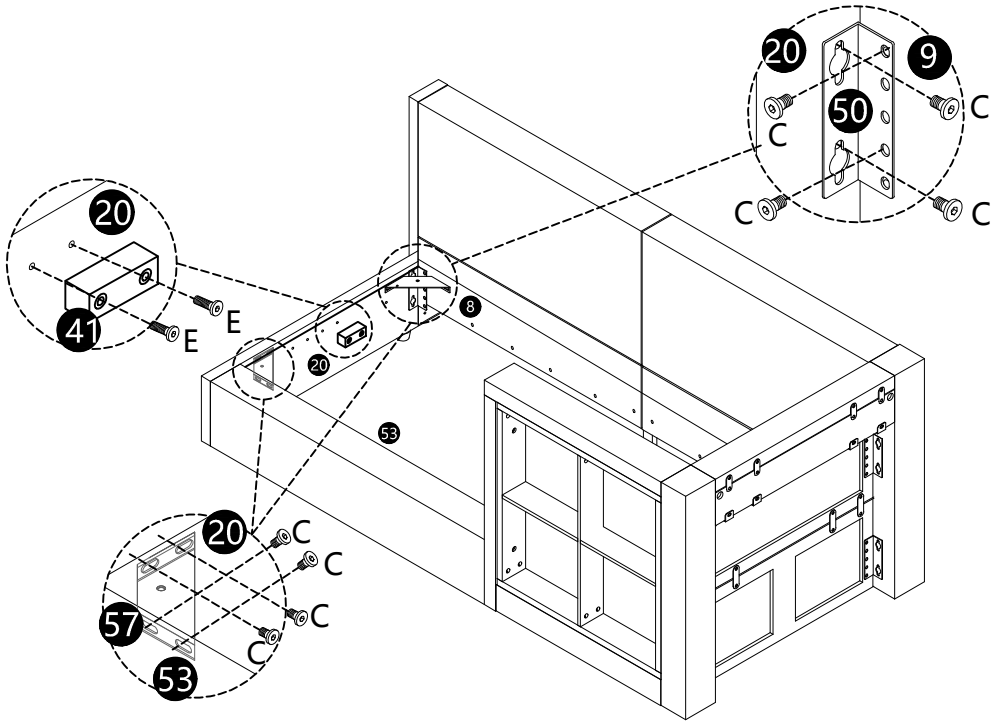

29

D*6PCS



M8*35mm

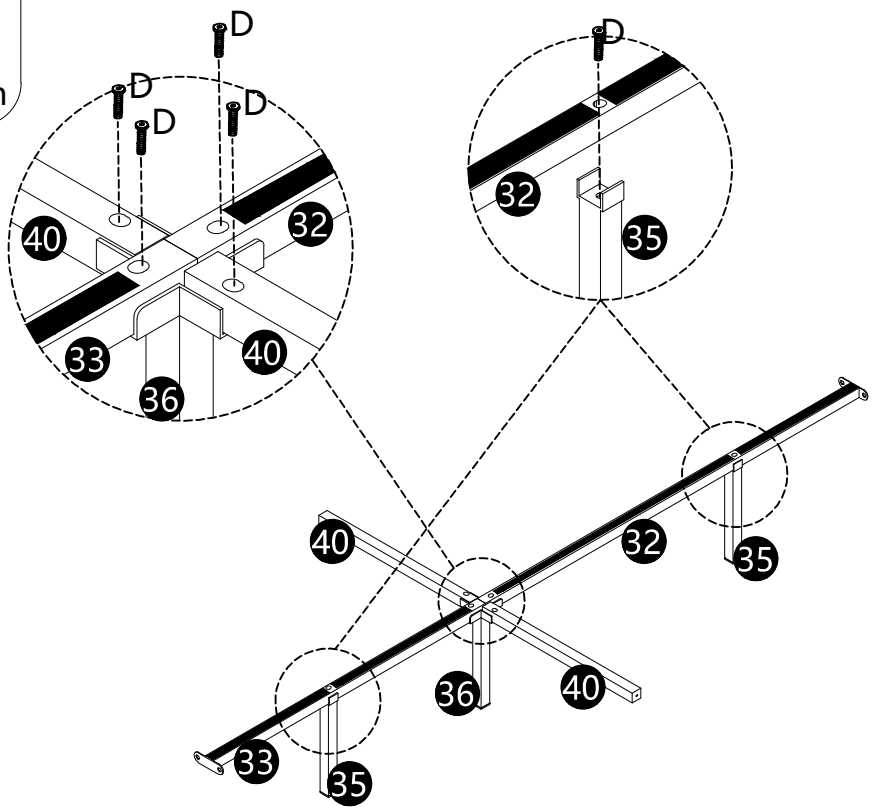

30

C*12PCS



M8*16mm

31

B*2PCS



M6*40mm

C*4PCS



M8*16mm

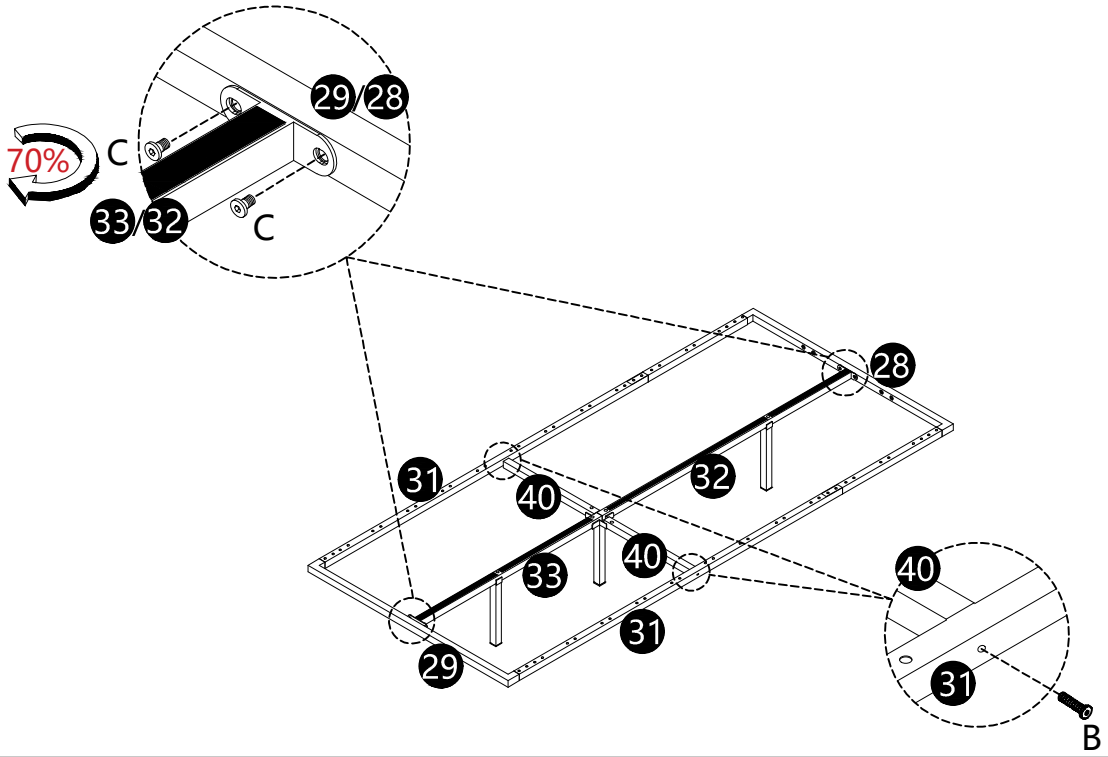

32

C*4PCS



M8*16mm

33

C*4PCS

M8*16mm

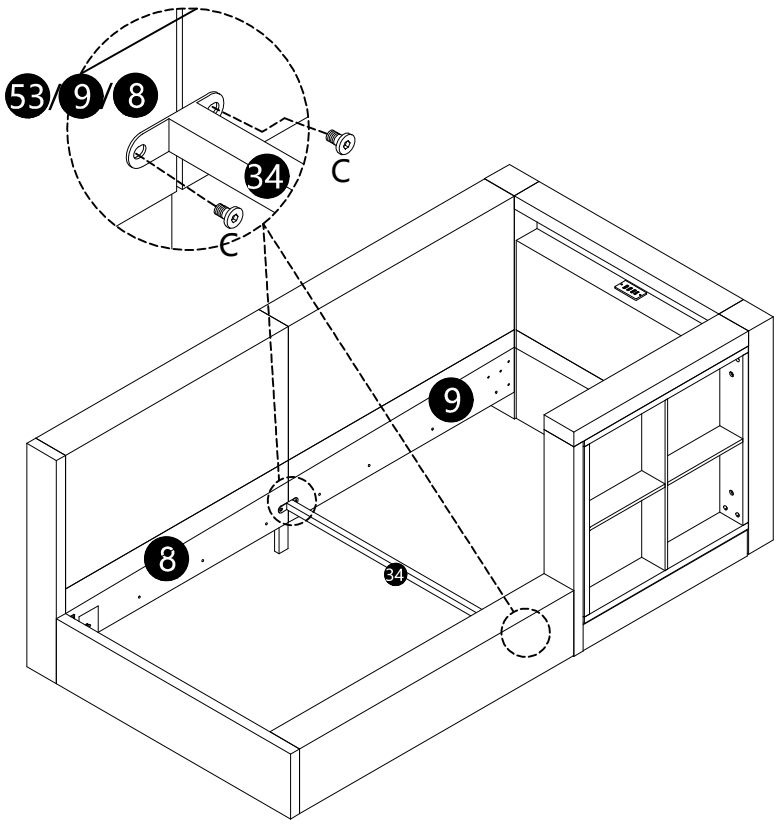

34

C*8PCS

M8*16mm

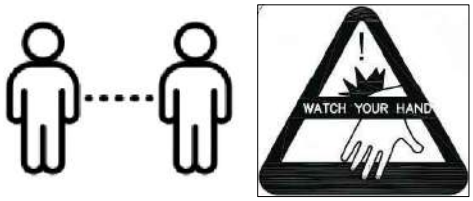

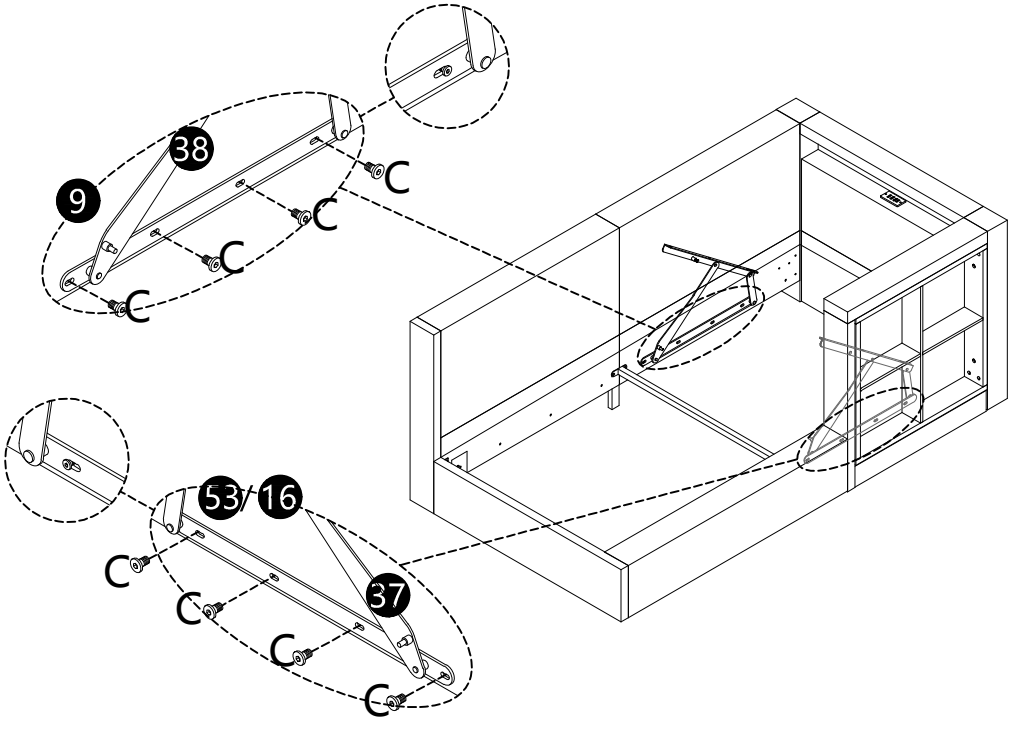

35

C*6PCS

M8*16mm

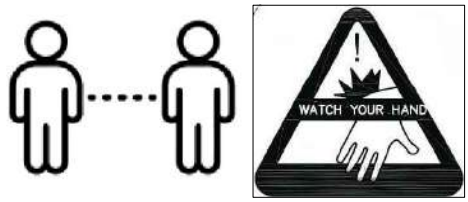

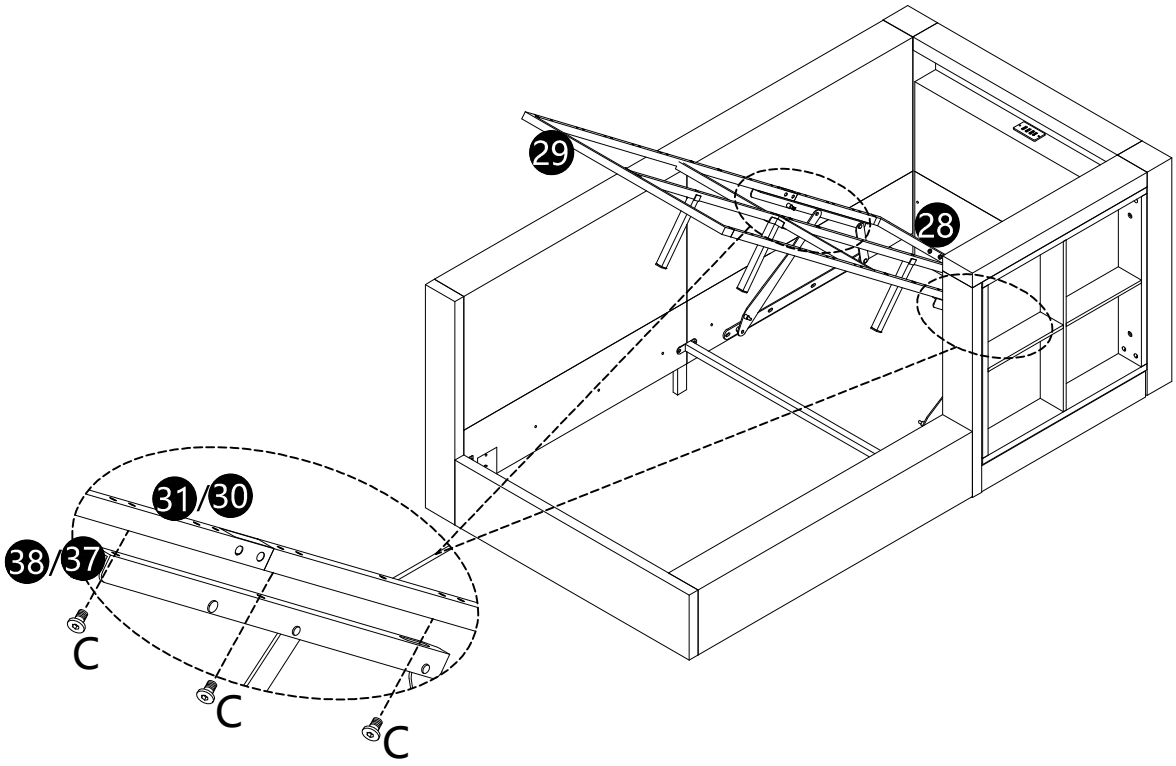

36

J*4PCS

M8

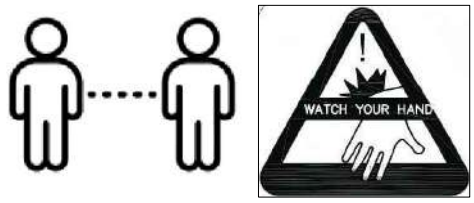

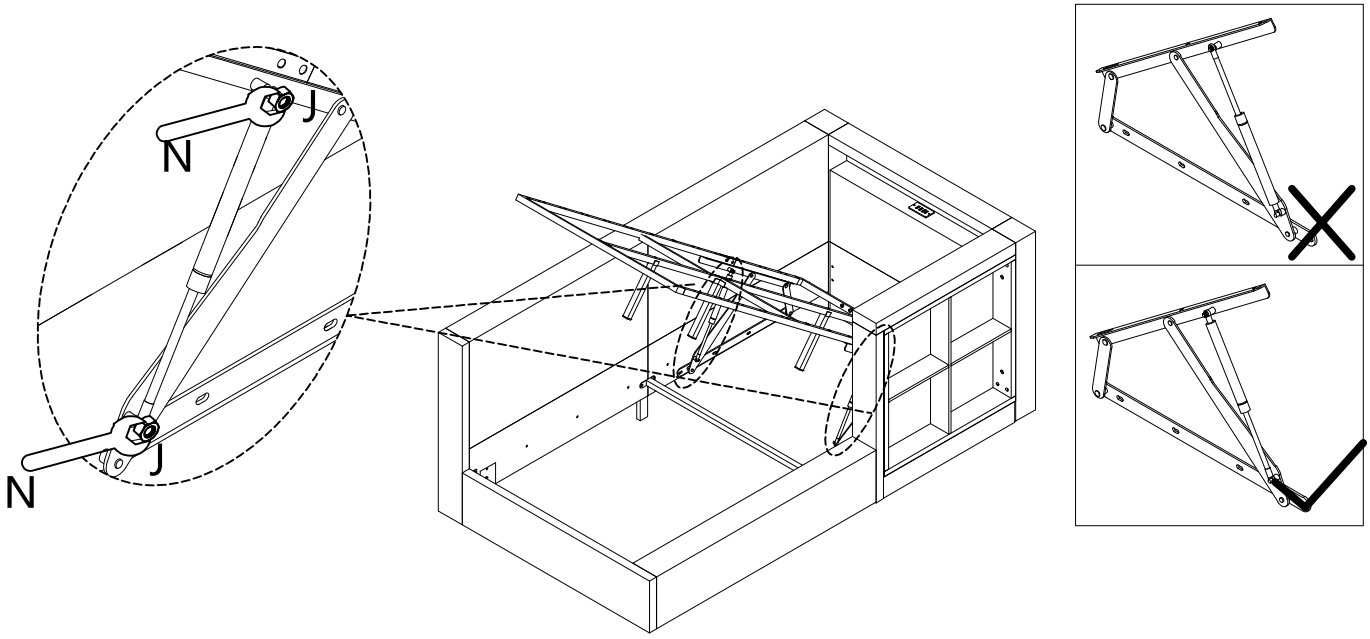

37

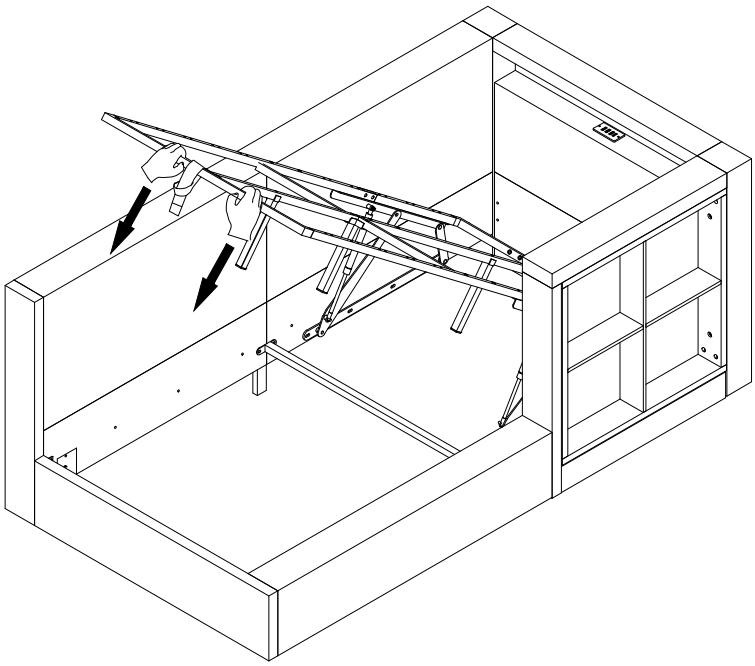

38

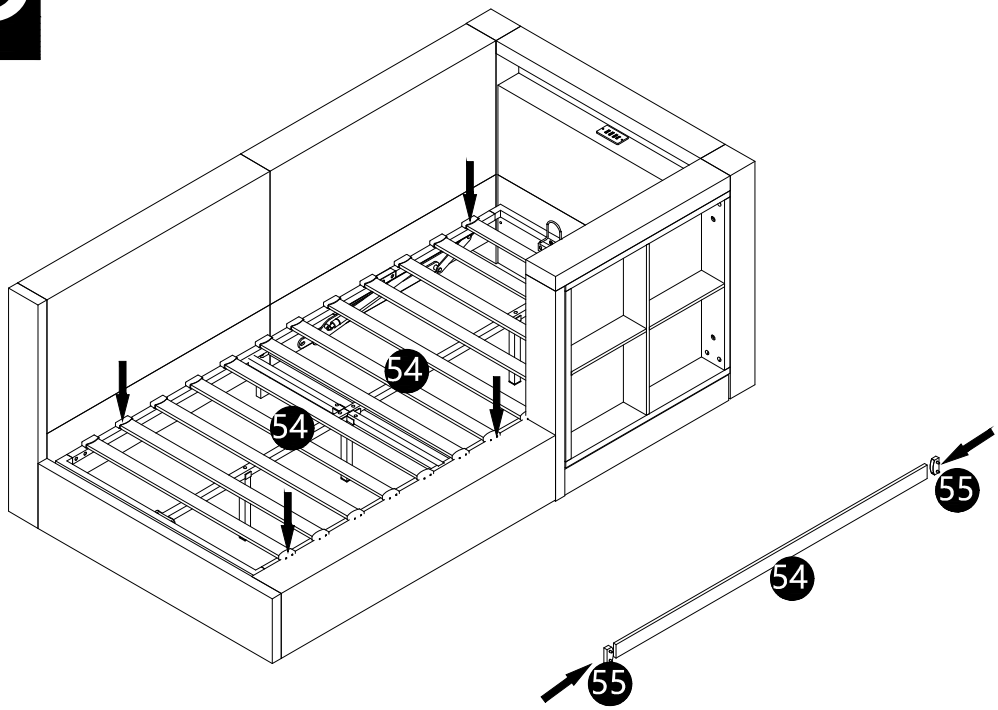

39

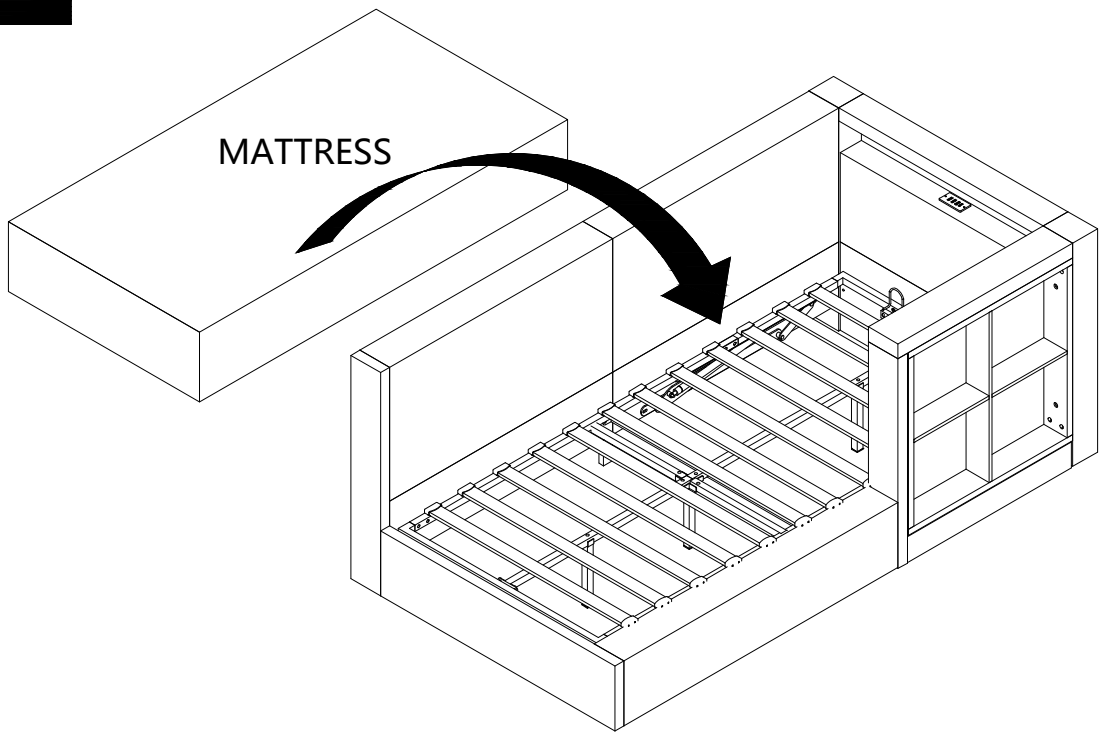

40

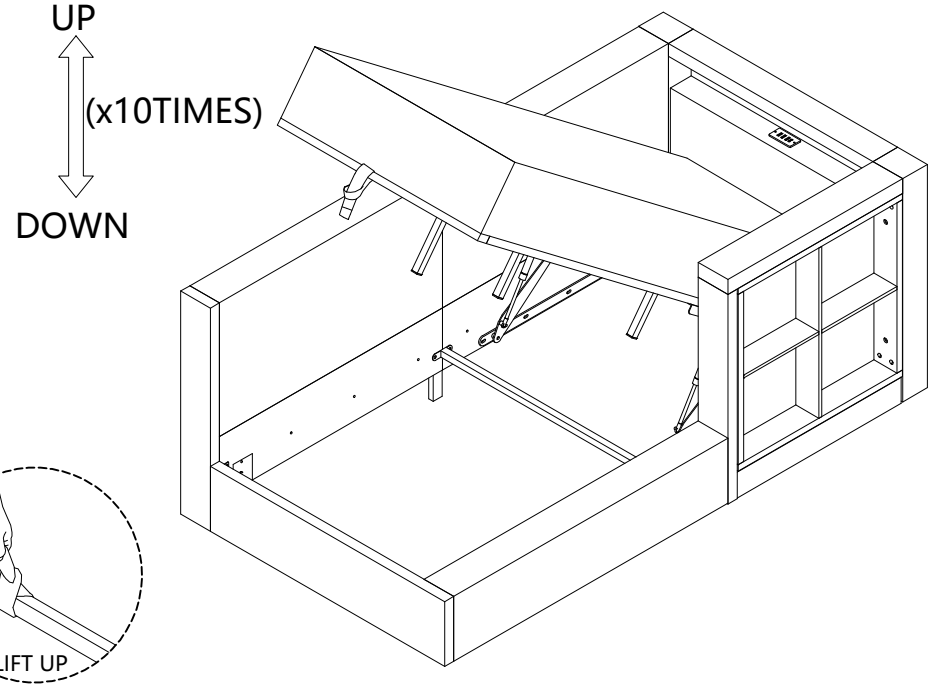

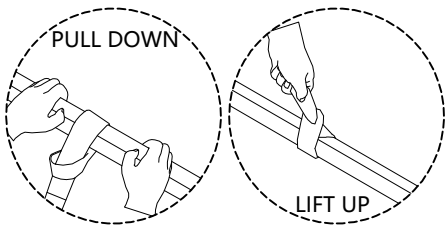

41

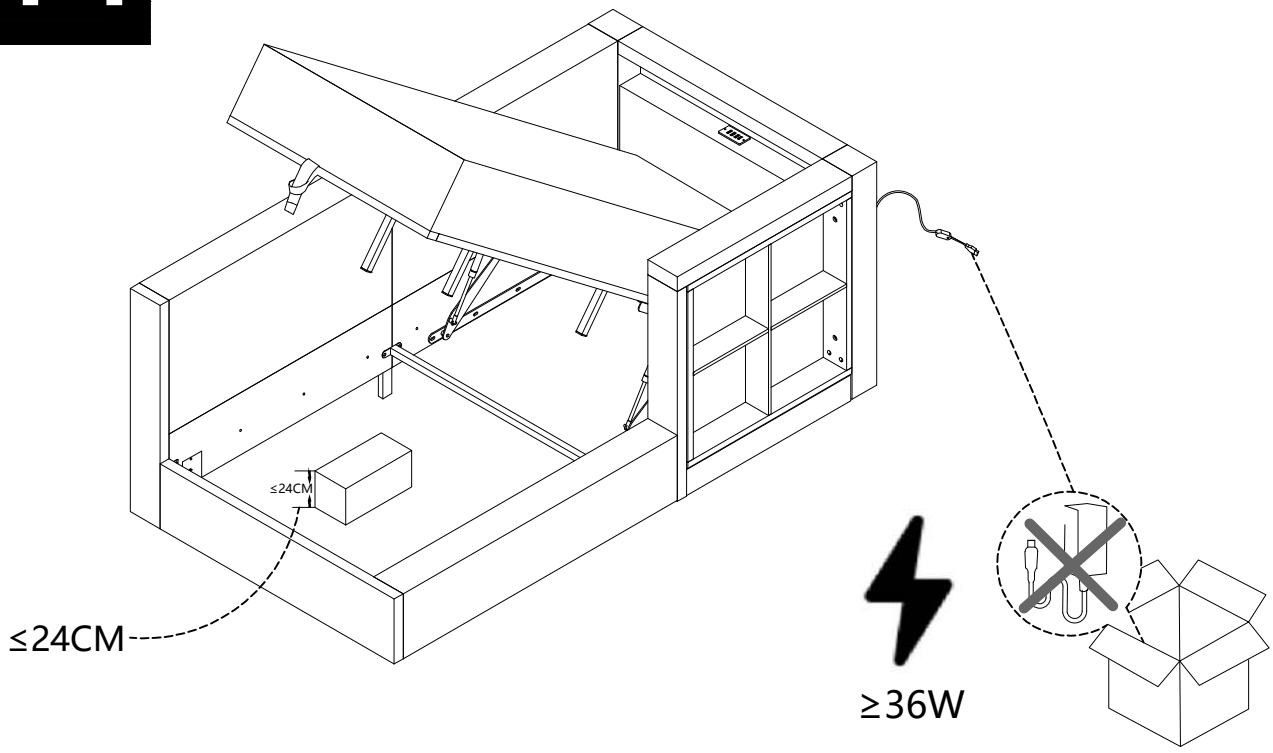

42

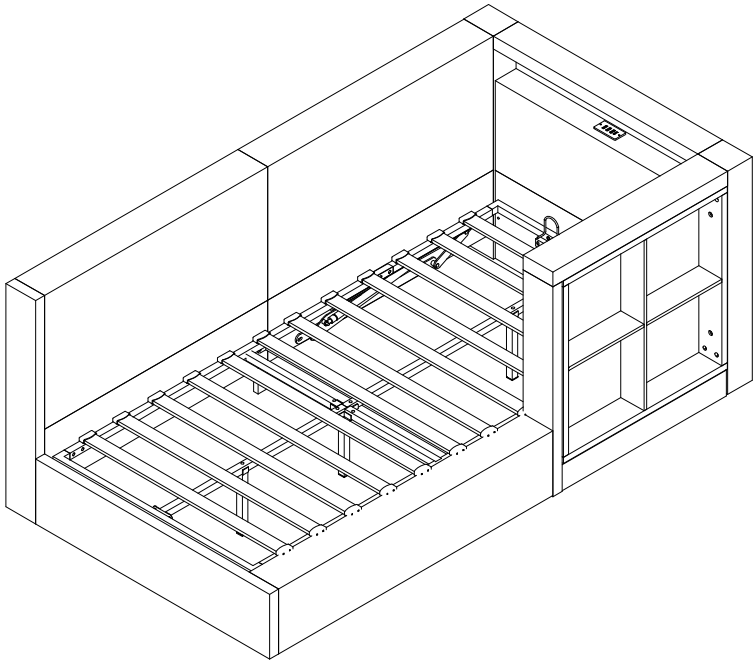

GB- NOTE:The battery in the remote control requires you to purchase and install it yourself.
Model:CR2025

DE- HINWEIS:Die Batterie in der Fernbedienung müssen Sie selbst kaufen und installieren.
Modell:CR2025

FR- REMARQUE:la pile de la télécommande doit etre achetée et installée par vos soins.
Modèle:CR2025

IT- NOTA:la batteria del telecomando deve essere acquistata e installata autonomamente.
Modello:CR2025

ES- NOTA: La pila del mando a distancia debe comprarla e instalarla usted mismo.
Modelo:CR2025

①



②



③



N

④



⑤



⑥



⑦



N

⑧



Optional: Cover screw holes with included decorative tape.

Optional: Schraublöcher mit beiliegender Dekofolie abdecken.

Optionnel : Masquez les trous de vis avec le ruban décoratif inclus.

Opzionale: Coprire i fori delle viti con il nastro decorativo incluso.

Opcional: Cubra los agujeros de tornillos con la cinta decorativa incluida.

①



②

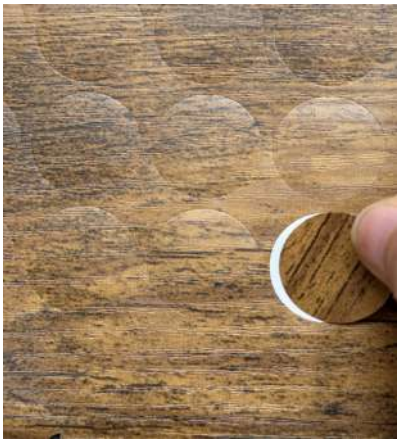

③



④

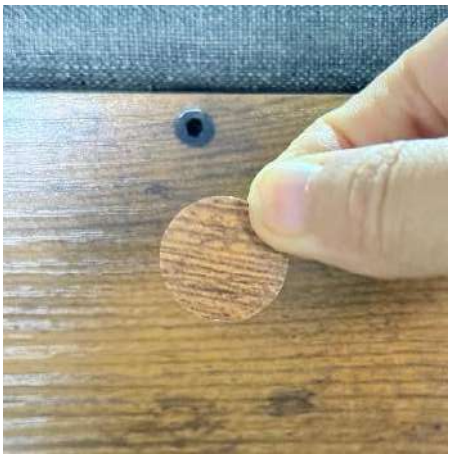

⑤



⑥



Led Bluetooth MiniController Manual

Please download "LotusLamp X" in the app store or scan the QR code below to download

1 .Download the"LotusLamp X"app with your phone by scanning theQR code or searching for the Lotus Lamp app inthe iPhone App Store or Google Play Store.

2.After the APP are downloaded successfully, you need toturn on Bluetooth function on your phone firstly, then plug inthe strip light, then open the APP, your APP will pair with thestrip light automatically and you can control it.

Unable to Connect Troubleshooting

(1)Checkifthe power supply of the light strip is normal.
(2)Check if the Bluetooth is turn on.
(3)Check if there are other mobile phone are connectedBluetooth 4.0 only support connections one to many,dose not support many to many.
(4)CheckAPP Bluetooth setting if the phone is connected tothe device,ifconnect,exit theAPPand reopen,the APPwill go to connect automatically.
(5)Normal operations and can not connect, please exit theAPP and reopen.
(6)Exit APP, restart mobile phone, power on the strip light.reopen the APP, then them will connect automatically.



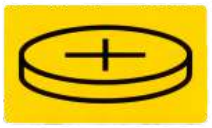



KEEP new and used batteries **OUT OF REACH of CHILDREN.**
Seek immediate medical attention if a battery is suspected to be swallowed or inserted inside any part of the body.
If the battery compartment does not close securely, stop using the product and keep it away from children.



If a battery has been ingested, or there is a possibility one might have been ingested, please seek medical attention and inform the medical authorities that you suspect battery ingestion.

It's not always clear when a child has swallowed a button battery, as there are no specific symptoms. However, they might:

- cough, gag, or drool;
- seem to have a stomach bug or virus;
- vomit;
- complain of pain in their stomach, chest, or throat;
- appear tired or sluggish; and
- lose their appetite.

Since the signs aren't obvious, it's important to keep a close eye on loose, used, or spare button batteries in your home, as well as the products that contain them.

Certificate Of Compliance

Certificate No.	:	BZT252355000415EC
Applicant	:	Xiamen Zhenlexin Electronic Technology Co., Ltd
Address	:	3rd Floor, No. 96, Huli Yuan, Xinmei Sub-district, Tong'an District, Xiamen City
Manufacturer	:	Xiamen Zhenlexin Electronic Technology Co., Ltd
Address	:	3rd Floor, No. 96, Huli Yuan, Xinmei Sub-district, Tong'an District, Xiamen City
Product Name	:	Light strip
Main Model	:	ZLX5050RGB-30D
Series Models	:	ZLX5050RGB-60D (All models share same electric circuits except outer shape and model name.)

Essential requirement		Applied Specifications/Standards	Documentary Evidence	Result
Art.3.1(a)	Health	BS EN 62479:2010	BZT252355000415ER03	Pass
Art.3.1(a)	Safety	BS EN IEC 60598-1:2021+A11:2022 BS EN 60598-2-21:2015	BZT252355000415SR	Pass
Art.3.1(b)	EMC	ETSI EN 301 489-1 V2.2.3 (2019-11) ETSI EN 301 489-3 V2.3.2 (2023-01) BS EN IEC 55015:2019/A11:2020 BS EN IEC 61547:2023 BS EN IEC 61000-3-2:2019+A1:2021+A2:2024 BS EN 61000-3-3: 2013+A1:2019+A2:2021	BZT252355000415ER02	Pass
Art.3.2	Radio	ETSI EN 300 440 V2.2.1 (2018-07)	BZT252355000415ER01	Pass

Technical documentation of the company and the product above have been observed and audit has been completed successfully by us with UK Radio Equipment Regulations (SI 2017 No.1206).

The UKCA mark shown below can only be used under the responsibility of the manufacturer with the completion of UK Declaration of Conformity and other necessary technical documentation for all the relevant regulation(s). The certificate applies to the tested sample above mentioned only and shall not imply an assessment of the whole production.

Remark: This report supersedes BZT252355000415EC which is withdrawn.

Scan QR code
verification of authenticity

UKCA

Alex Wu

Alex Wu
Technical director
Date: Oct.23, 2025

BZT Testing (Dongguan) Co.,ltd
BZT
Approve

Lab Name : BZT Testing (Dongguan) Co.,Ltd.
Lab Address : 1F, Bangying Building, Fuma, Chigang Community, Humen Town, Dongguan City, Guangdong Province, China
BZT http : www.bzt-test.com Telephone : +86-0769-81516886
Confirm the authenticity of Test reports Email: bzt@bzt-test.com

Certificate Of Compliance

Certificate No.	:	BZT252355000417CC-R1
Applicant	:	Xiamen Zhenlexin Electronic Technology Co., Ltd
Address	:	3rd Floor, No. 96, Huli Yuan, Xinmei Sub-district, Tong'an District, Xiamen City
Manufacturer	:	Xiamen Zhenlexin Electronic Technology Co., Ltd
Address	:	3rd Floor, No. 96, Huli Yuan, Xinmei Sub-district, Tong'an District, Xiamen City
Sample Name	:	Light strip
Main Model	:	ZLX5050RGB-30D
Additional Model	:	ZLX5050RGB-60D
Test Standard	:	BS EN 62321-1:2013 BS EN 62321-2:2021 BS EN 62321-3-1:2013 BS EN 62321-4:2013/AMD1:2017 BS EN 62321-5:2013 BS EN 62321-6:2015 BS EN 62321-7-1:2015 BS EN 62321-7-2:2017 BS EN 62321-8:2017
As shown in the Test Report No.	:	BZT252355000417CR-R1

The EUT described above has been consolidated by us and found in compliance with the council of UK RoHS Restriction of Use of Certain Hazardous Substances in Electrical and Electronic Equipment Regulations SI 2012/3032. The certificate applies to the tested sample above mentioned only and shall not imply an assessment of the whole production. It is only valid in connection with the test report Number BZT252355000417CR-R1.

Scan QR code verification of authenticity

UKCA RoHS

Mark Wen

BZT Testing (Dongguan) Co.,ltd Approve

Mark Wen
Technical director
Date: Oct.28,2025

Lab Name : BZT Testing (Dongguan) Co., Ltd.
Lab Address : 1F, Bangying building, Fuma, Chigang community, Humen Town, Dongguan City, Guangdong Province, China
BZT http : www.bzt-test.com Telephone : +86-0769-81516886
Confirm the authenticity of Test reports Email: bzt@bzt-test.com

UK
CA

CERTIFICATE OF CONFORMITY

Electromagnetic Compatibility Regulations 2016 (SI 2016 No. 1091)

This Certificate of Conformity is hereby issued to the product designated below:

Certificate No. :	25EP06144E02
Report No. :	EP2506144E02
Date Issue. :	2025-07-07
Applicant's name :	Zhangzhou Jinhe Electronic Technology Co., Ltd
Address :	2nd Floor, Building 2, No.15 Jinxia Road, Wenpu Industrial Park, JiaomeiTown, Zhangzhou City, Fujian Province,China
Manufacturer's name :	Zhangzhou Jinhe Electronic Technology Co., Ltd
Address :	2nd Floor, Building 2, No.15 Jinxia Road, Wenpu Industrial Park, JiaomeiTown, Zhangzhou City, Fujian Province,China
Product Description :	Power Supply
Model(s)/Type References :	JH-14Y
Parameters :	See appendix for details
Standard(s) :	BS EN 55032:2015+A11:2020+A1:2020 BS EN 55035:2017+A11:2020 BS EN IEC 61000-3-2:2019+A1:2021+A2:2024 BS EN 61000-3-3:2013+A1:2019+A2:2021

On the basis of the referenced test report(s), sample(s) tested of the above product have been found to comply with the standards harmonized with the directives listed on this verification at the time the tests were carried out. Other standards and Directives may be relevant to the product. This verification is part of the full test report(s) and should be read in conjunction with it(them).

Once compliance with all product relevant UKCA mark directives are verified, including any relevant e.g. risk assessment and production control, the manufacturer may indicate compliance by signing a Declaration of Conformity themselves and applying the mark to products identical to the tested sample(s).

Approved By

Eric Liu

Director of engineering department

Dongguan Pubiao Testing Technology Co., Ltd. *CERTIFICATE*

Dongguan Pubiao Testing Technology Co., Ltd
Room 101, Building 1, No.30, Minghua Road, Shijie, Shijie Town, Dongguan, Guangdong, China.
Tel: +86 769 81813516 E-mail: service@pubiaotest.com Web: www.pubiaotest.com

UK CA

CERTIFICATE OF CONFORMITY

Electrical Equipment (Safety) Regulation 2016

This Certificate of Conformity is hereby issued to the product designated below:

Certificate No. :	25SP06144L02
Report No. :	SP2506144L02
Date Issue. :	2025-07-04
Applicant's name :	Zhangzhou Jinhe Electronic Technology Co., Ltd
Address :	2nd Floor, Building 2, No.15 Jinxia Road, Wenpu Industrial Park, JiaomeiTown, Zhangzhou City, Fujian Province,China
Manufacturer's name :	Zhangzhou Jinhe Electronic Technology Co., Ltd
Address :	2nd Floor, Building 2, No.15 Jinxia Road, Wenpu Industrial Park, JiaomeiTown, Zhangzhou City, Fujian Province,China
Product Description :	Power Supply
Model(s)/Type References :	JH-14Y
Parameters :	See appendix for details
Standard(s) :	BS EN IEC 62368-1:2020+A11:2020

On the basis of the referenced test report(s), sample(s) tested of the above product have been found to comply with the standards harmonized with the directives listed on this verification at the time the tests were carried out. Other standards and Directives may be relevant to the product. This verification is part of the full test report(s) and should be read in conjunction with it(them).

Once compliance with all product relevant UKCA mark directives are verified, including any relevant e.g. risk assessment and production control, the manufacturer may indicate compliance by signing a Declaration of Conformity themselves and applying the mark to products identical to the tested sample(s).

Approved By

Eric Liu

Director of engineering department

Dongguan Pubiao Testing Technology Co., Ltd.
Room 101, Building 1, No.30, Minghua Road, Shijie, Shijie Town, Dongguan, Guangdong, China.
Tel: +86 769 81813516 E-mail: service@pubiaotest.com Web: www.pubiaotest.com

Certificate – Сертификат – 證明書 – Certificat – 증명서

Certificate No. : HUAX260104705KC

huaxiang

Certificate of Conformity

Certificate's Holder	:	**Zhangzhou Jinhe Electronic Technology Co., Ltd**
Address	:	iao Mei Zhen Hong Jian Cun Jiao Song, Taiwan Merchants Investment Zone, Zhangzhou, Fujian Province3rd Floor, Building C, No. 59 Road
Manufacturer	:	**Zhangzhou Jinhe Electronic Technology Co., Ltd**
Address	:	iao Mei Zhen Hong Jian Cun Jiao Song, Taiwan Merchants Investment Zone, Zhangzhou, Fujian Province3rd Floor, Building C, No. 59 Road
Product Name	:	**Embedded socket**
Product Model (S)	:	JH-15, JH-51, JH-52, JH-53, JH-54, JH-55, JH-56, JH-57, JH-58, JH-59, JH-60,JH-14Y,JH-14
Trade Mark	:	N/A
Related Standard(s)	:	**IEC 62321-3-1:2013, IEC 62321-5:2013, IEC 62321-4:2017, IEC 62321-7-1:2015, IEC 62321-7-2:2017, IEC 62321-6:2015 , IEC 62321-8:2017**
Report No.	:	**HUAX260104705KR**

The product described above has been consolidated by us and found in compliance with the council RoHS 2.0 Directive (EU) 2015/863 and (EU)2017/2102 amending Annex II to Directive 2011/65/EU It is only valid in connection with the test report

Green Product RoHS

Jan. 06, 2026

Certification Manager

Shenzhen Huaxiang Testing Technology Co., LTD. IMPARTIAL Product Safety Approved

Shenzhen Huaxiang Testing Co., Ltd
1st Floor, Building A1, No. 2082 Jincheng Road, Shajing Street, Bao'an District, Shenzhen City, Guangdong Province, China Web.:Http:// www.hua-x.com
E-mail: huaxiang@hua-x.com Tel.:+86-0755-23010432