6 Drawers Dresser Chest

Assembly Instructions - Please keep for future reference

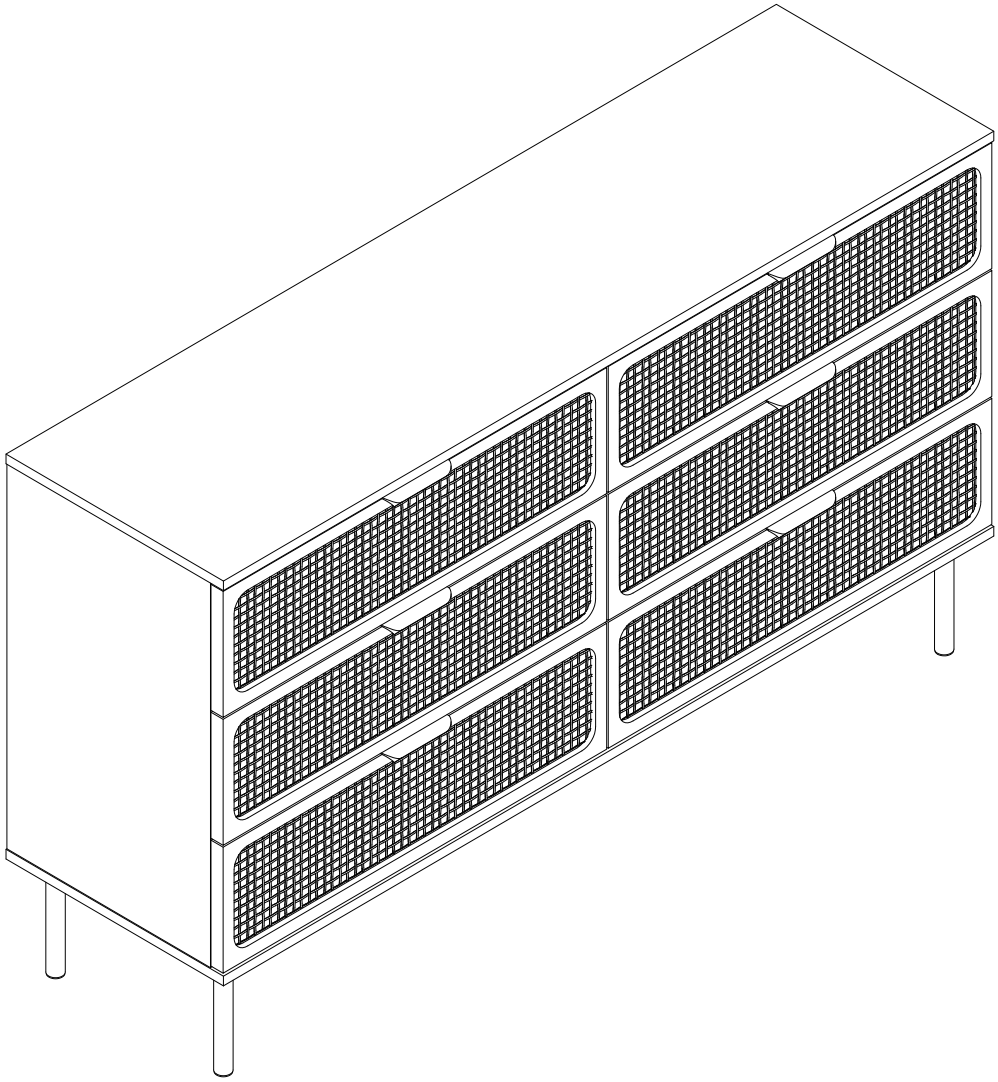

Dimensions

Width - 55.1inch
Depth - 15.4inch
Height - 31.9inch

Any question please feel free to contact us:
support@amer-life.com TEL:(901) 347-2181
We will provide further assistance within 24 hours.

Important – Please read these instructions fully before starting assembly

Issue 1 -13/03/2025

Safety and Care Advice

Important – Please read these instructions fully before starting assembly

• Check you have all the components and tools listed on the following pages.

• Remove all fittings from the plastic bags and separate them into their groups.

• Keep children and animals away from the work area, small parts could choke if swallowed.

• Make sure you have enough space to layout the parts before starting.

• During assembly do not stand or put weight on the product, this could cause damage.

• Assemble the item as close to its final position (in the same room) as possible.

• Assemble on a soft level surface to avoid damaging the unit or your floor.

• Parts of the assembly will be easier with 2 people.

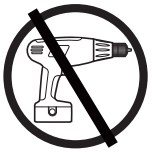

• To reduce the likelihood of damaging your product please ensure that your power drill is set on a low torque setting.

Care and maintenance

• Only clean using a damp cloth and mild detergent, do no use bleach or abrasive cleaners.

• From time to time check that there are no loose screws on this unit.

• This product should not be discarded with household waste. Take to your local authority waste disposal centre.

Handy Hints

• Assemble all parts and bolts loosely during assembly, only once the product is complete should you fully tighten the bolts

• Regularly check and ensure that all bolts and fittings are tightend properly.

WARNING
In order to help prevent overturning – please follow these instructions

To help prevent product toppling over please follow the below steps:-

Use the anti tip strap or wall fixing method provided (if applicable)
Do not allow children to climb or hang on the furniture
Do not open more than one drawer at a time
Do not place heavy items in the top drawers
Do not place heavy items on top of the furniture, unless the furniture has been designed for this purpose

Please note that only the anti tip strap is provided.
You will need to provide wall plugs and screws applicable for your wall type

Components - Fittings

Please check you have all the fittings listed below

Note: The quantities below are the correct amount to complete the assembly. In some cases more fittings may be supplied than are required.

A  7*43mm Cam Bolt x 39	**B**  Cam Lock x 39	**C**  8*30mm Wooden Dowel x 14
D  5*40mm Screw x 37	**E**  7*9mm Screw x 36	**F** 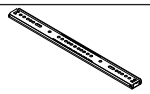 Drawer Slide x 12
G  3*16mm Back Panel Stiffener x 12	**H**  4*16mm Screw x 20	**I** 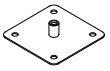 Metal Plate x 5
J 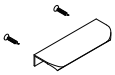 Handle & Fixings x 6	**K**  4*12mm Screw x 12	**L**  Wall Fixing Pack x 2
M  Adjustable Foot x 5	**N** 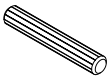 8*50mm Wooden Dowel x 1	

Tools required



Phillips screwdriver
(medium & large)

Ruler - Use this ruler to help correctly identify the screws

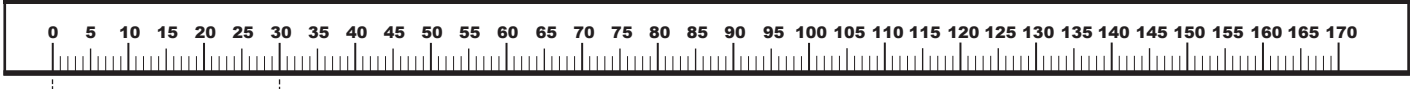

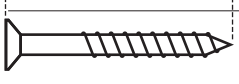

The screws length is measured from the head to the point (30mm screw shown).

Using Camlocks

Step 1

Connect the male camlock as directed in the assembly instructions using a screwdriver.

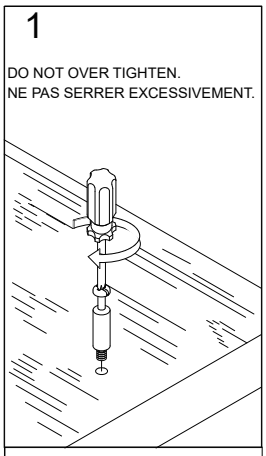

Step 2

Push the male camlock into the entry hole.

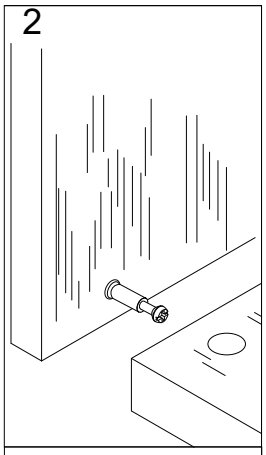

Step 3

Insert the female camlock as shown in the instructions.

Note: ensure that the arrow on the top of the camlock points towards the entry hole for the male camlock.

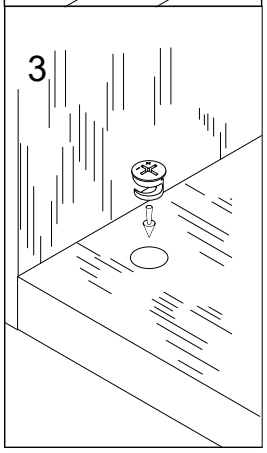

Step 4

Turn the female camlock clockwise with a screwdriver.

You should feel a click when the camlock is locked in place.

The joint is now secure.

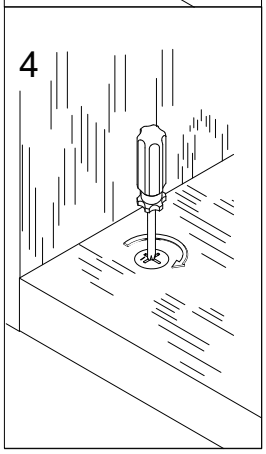

Components - Panels

Please check you have all the panels listed below

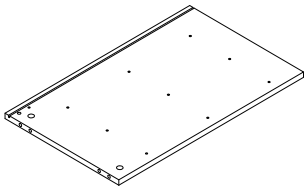

1 (60 x 36.5 x 1.5cm) x 1

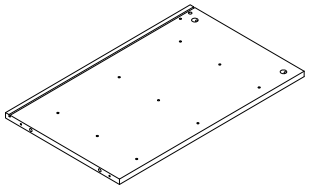

2 (60 x 36.5 x 1.5cm) x 1

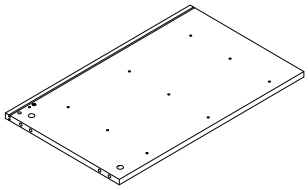

3 (60 x 36.5 x 1.5cm) x 1

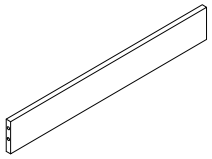

4 (67.6 x 9.5 x 1.5cm) x 1

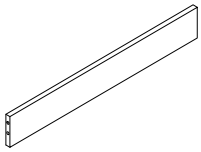

5 (67.6 x 9.5 x 1.5cm) x 1

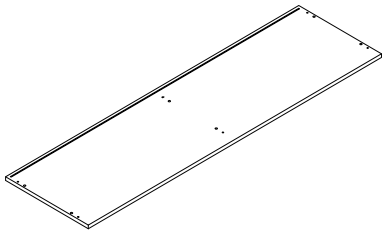

6 (140 x 39 x 0.25cm) x 1

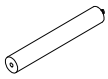

7 (16.5 x 2.5cm) x 5

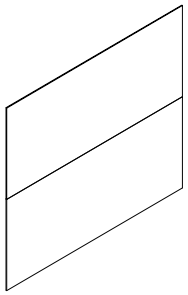

8 (68.6 x 61 x 0.25cm) x 2

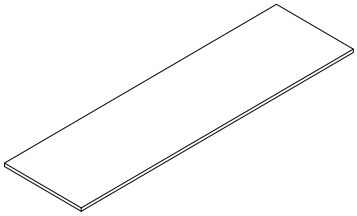

9 (140 x 39 x 1.5cm) x 1

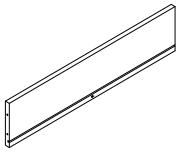

10 (63.6 x 14.5 x 1.5cm) x 6

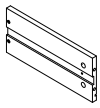

11 (33 x 14.5 x 1.5cm) x 6

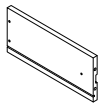

12 (33 x 14.5 x 1.5cm) x 6

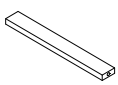

13 (31.4 x 4 x 1.5cm) x 6

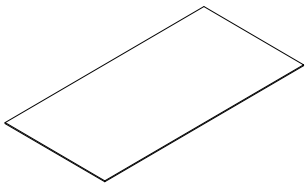

14 (64.6 x 32.4 x 0.25cm) x 6

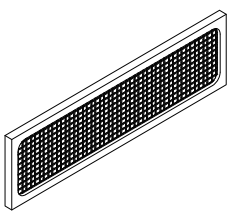

15 (69.6 x 19.5 x 2.2cm) x 3

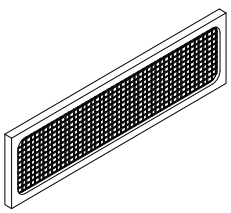

16 (69.6 x 19.5 x 2.2cm) x 3

Assembly Instructions

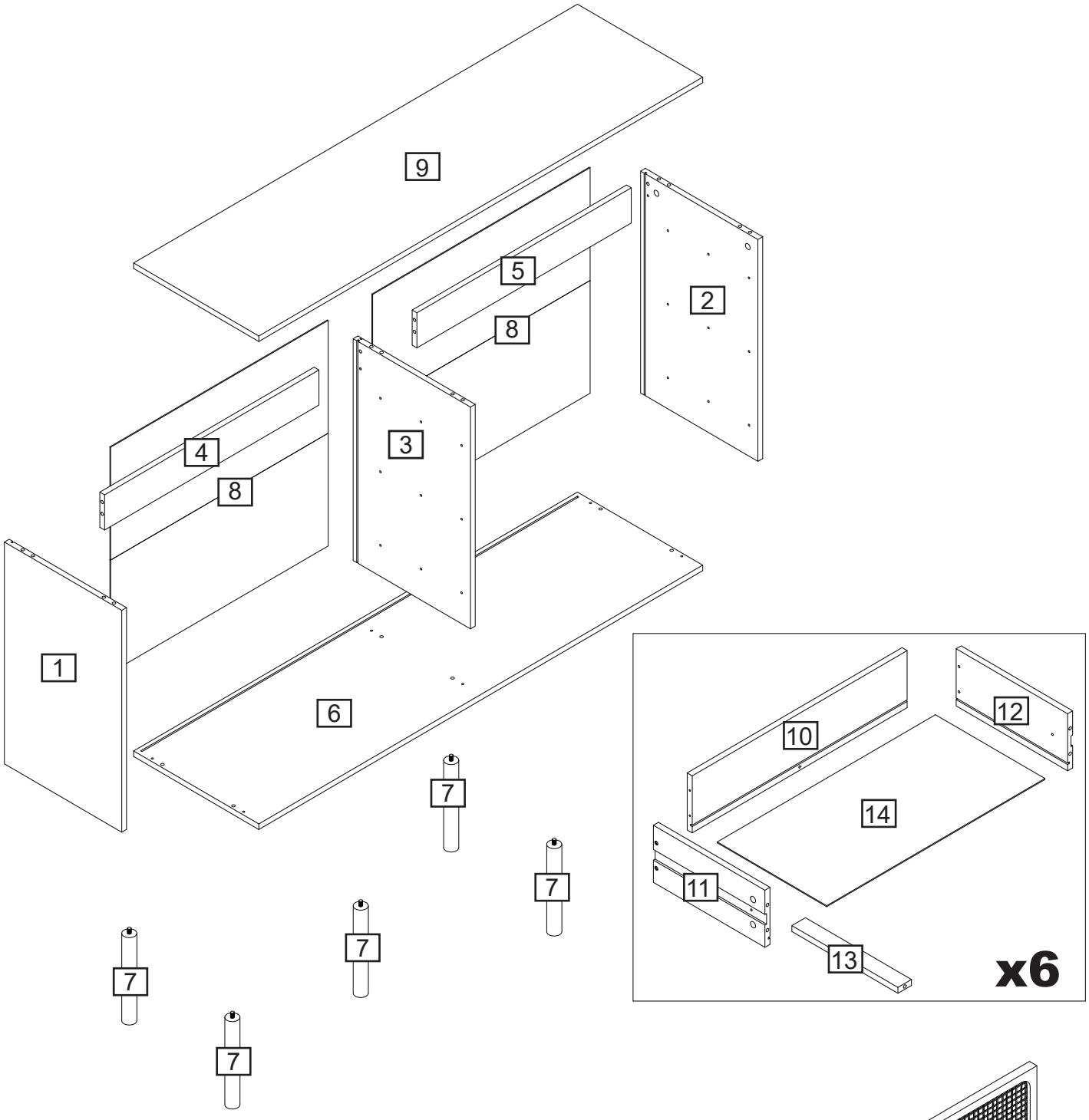

Assembly Instructions

Step 1

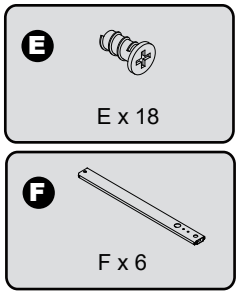

Note: **Please pay attention to the direction of the arrows on the drawer slides.**

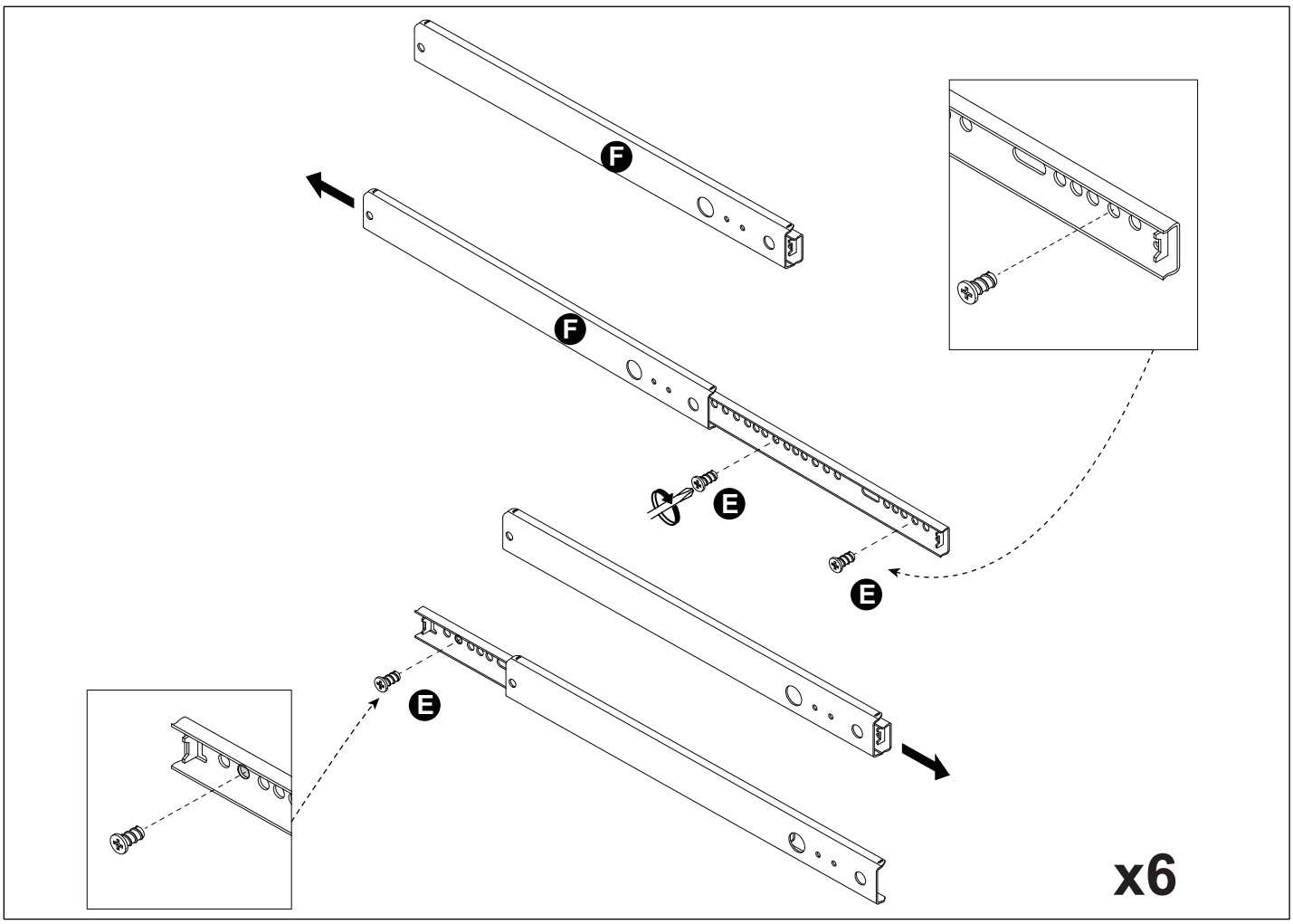

Attach drawer slide (F) to part (1, 2) using screw (E) with a screwdriver.

Assembly Instructions

Step 2

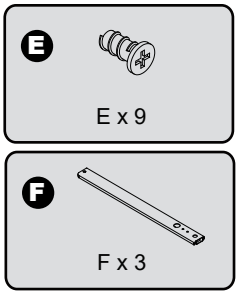

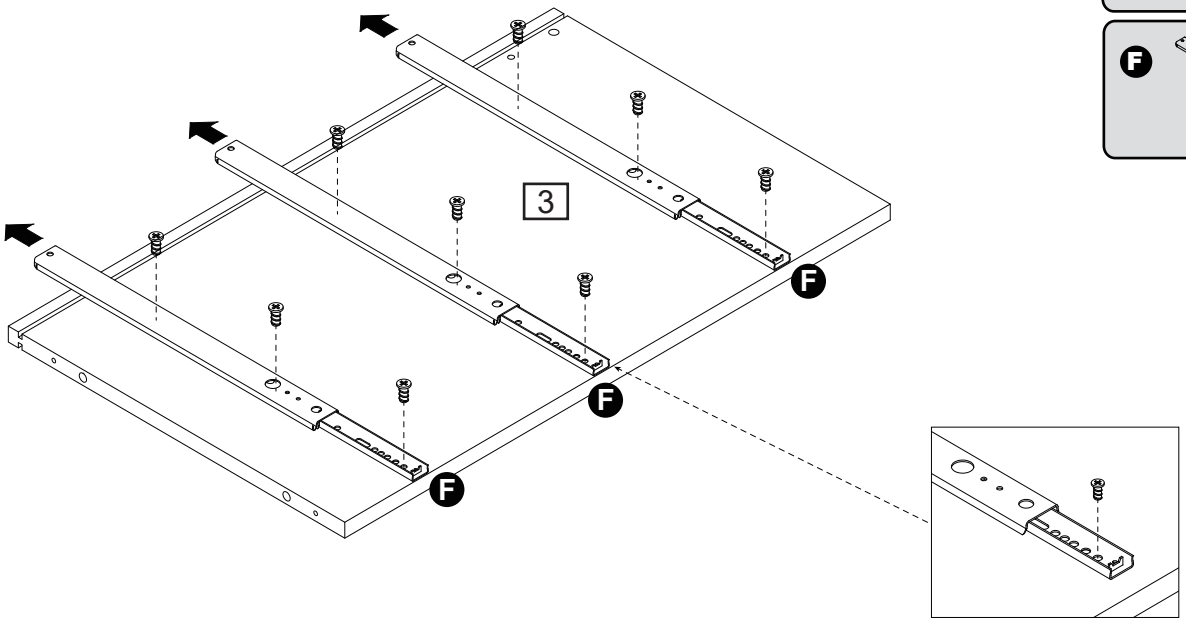

Note: **Please pay attention to the direction of the arrows on the drawer slides.**

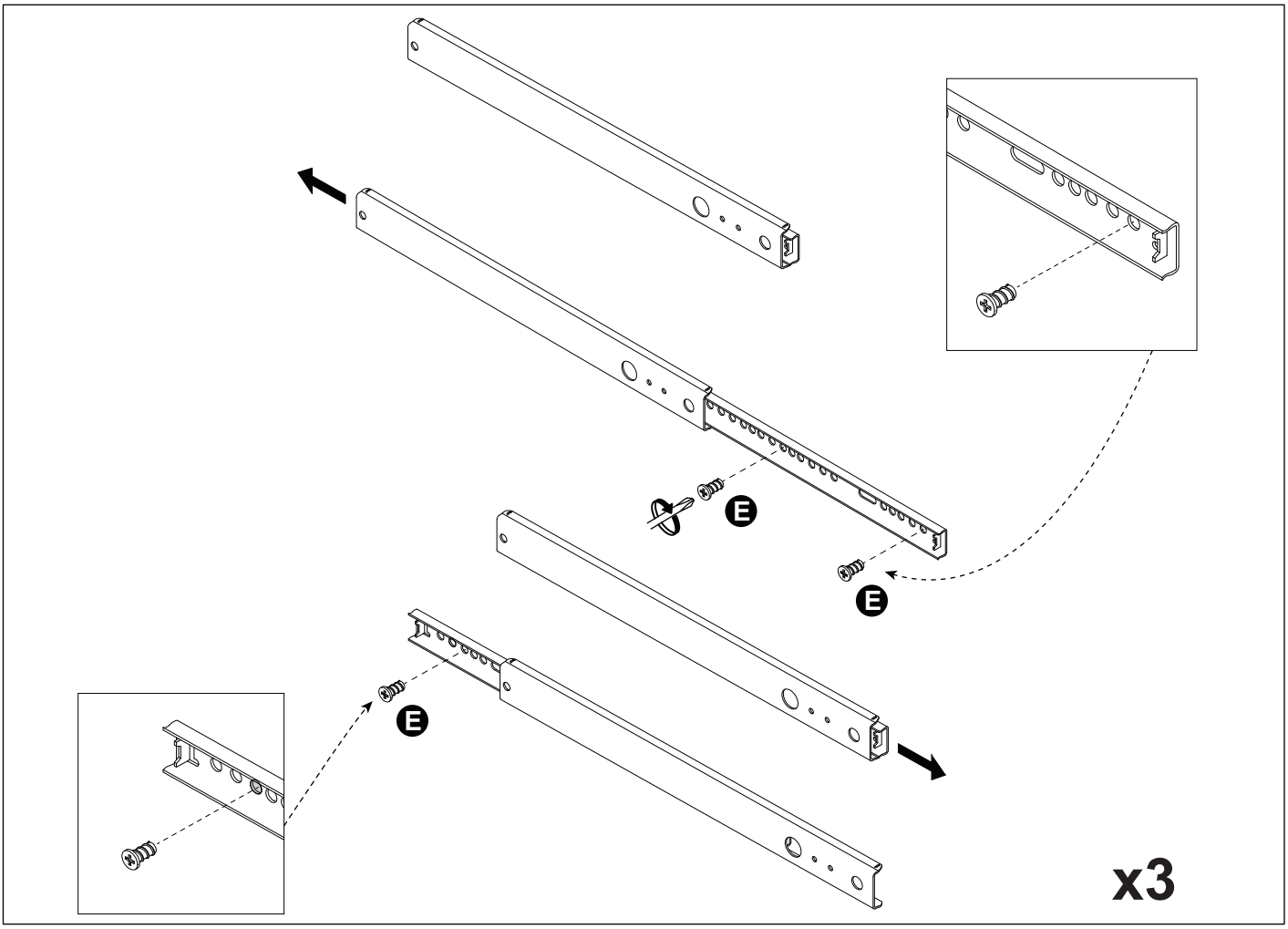

Attach drawer slide (F) to part (3) using screw (E) with a screwdriver.

Assembly Instructions

Step 3

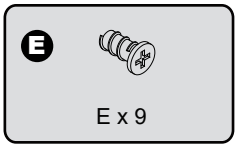

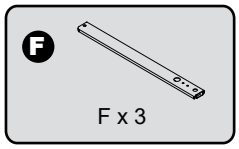

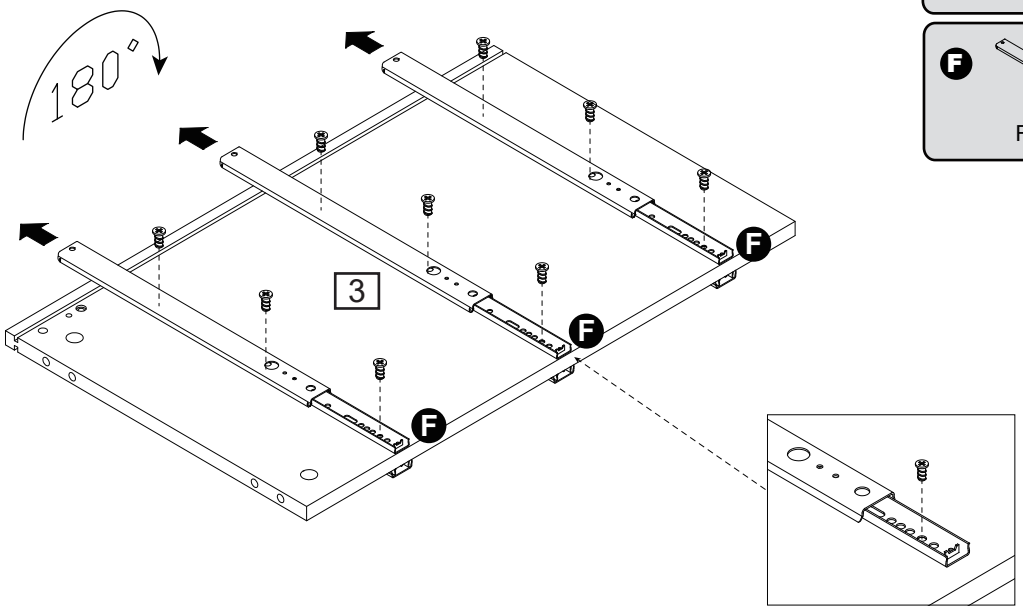

Note: **Please pay attention to the direction of the arrows on the drawer slides.**

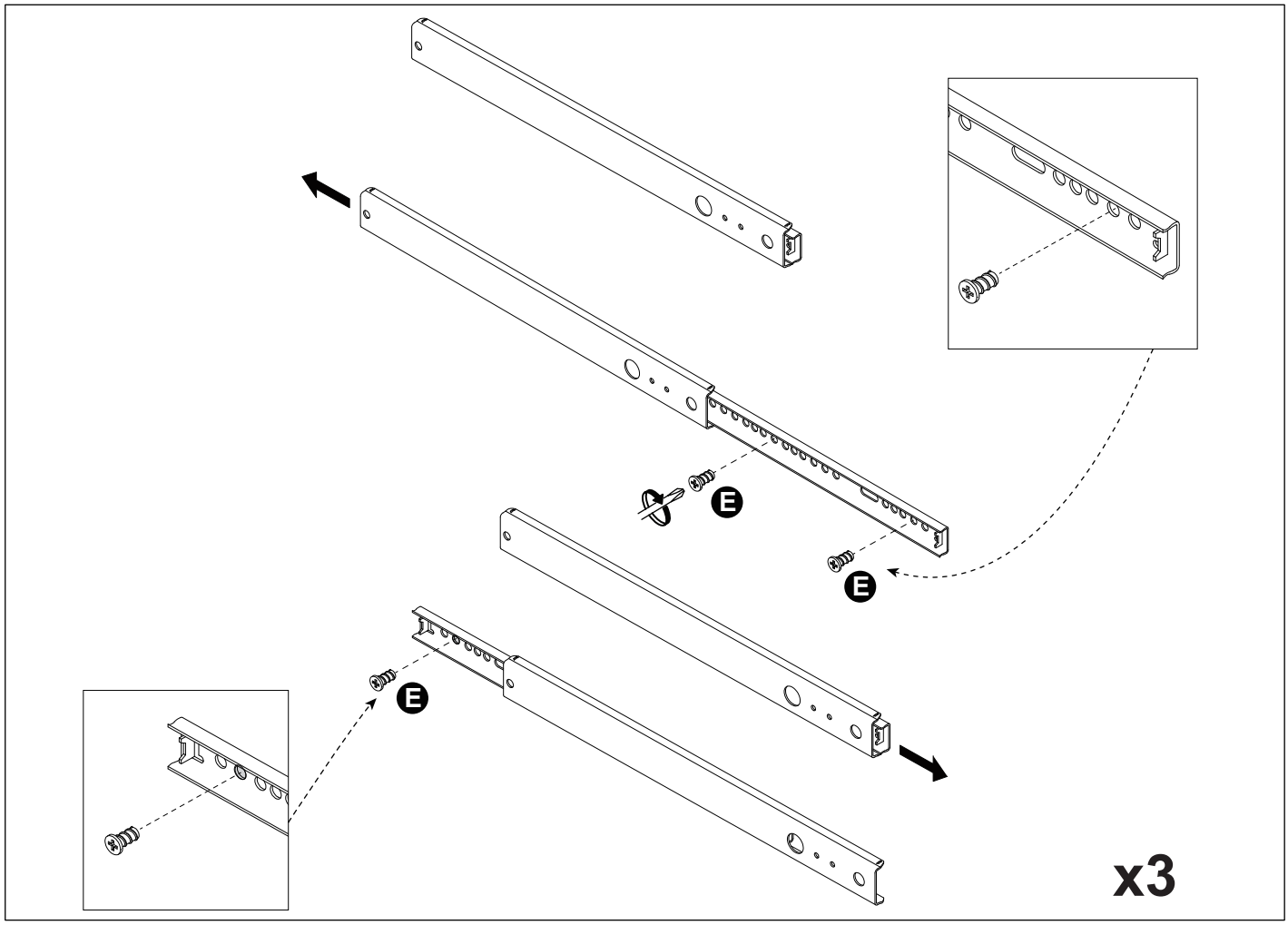

Attach drawer slide (F) to the other side of part (3) using screw (E) with a screwdriver.

Assembly Instructions

Step 4

CAM-LOCK
Tighten until shoulder is flush with panel.Do not overtighten or undertighten(see example below)

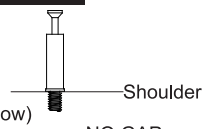

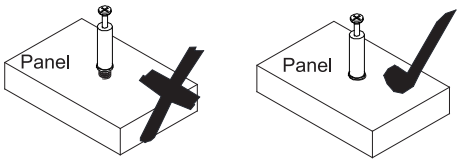

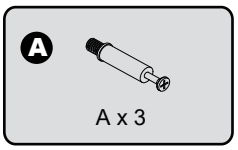

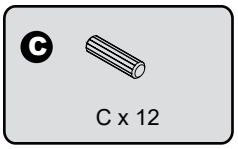

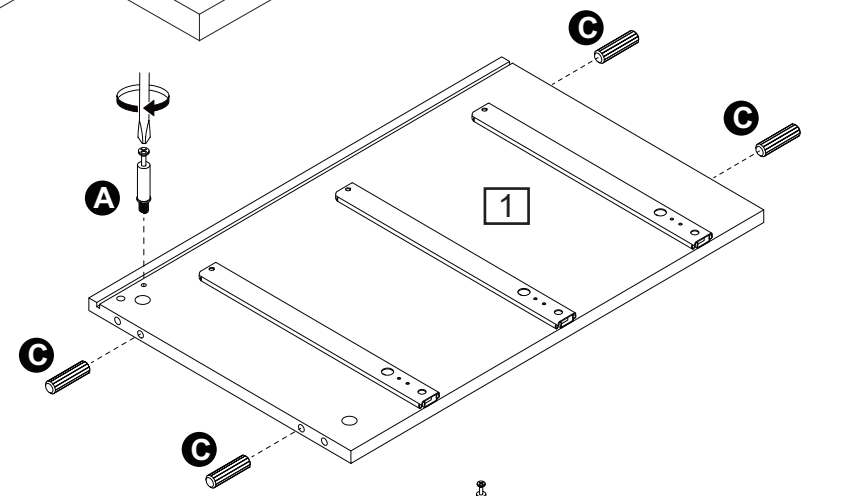

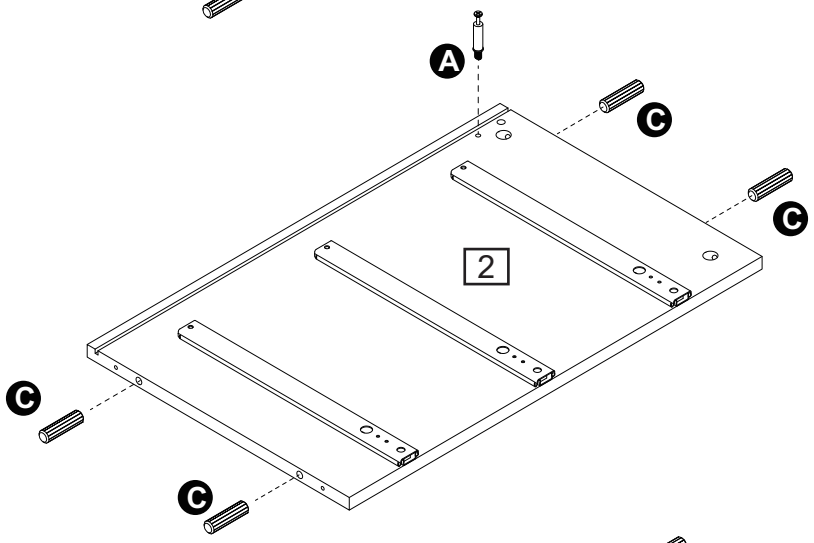

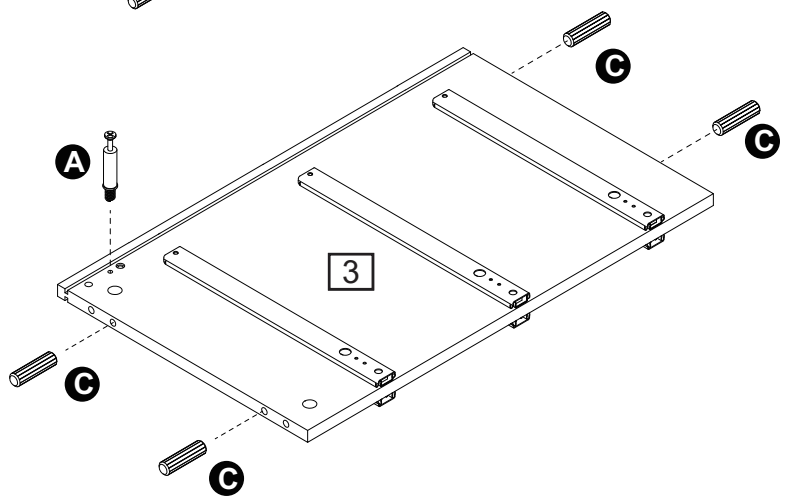

Attach cam bolt (A) to part (1, 2, 3) with a screwdriver.
Insert wooden dowel (C) into part (1, 2, 3).

Assembly Instructions

Step 5

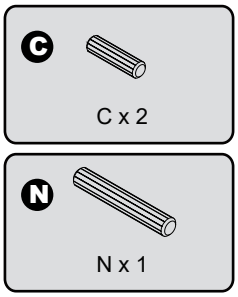

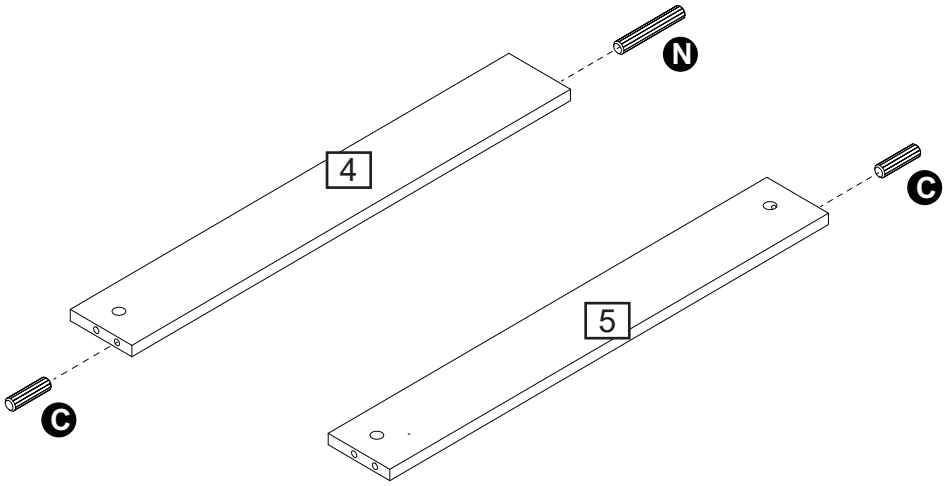

Insert wooden dowel (C) into part (4, 5), then insert wooden dowel (N) into part (4).

Step 6

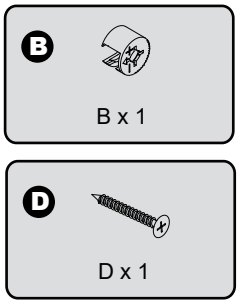

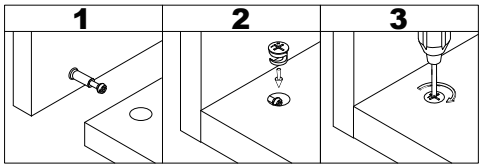

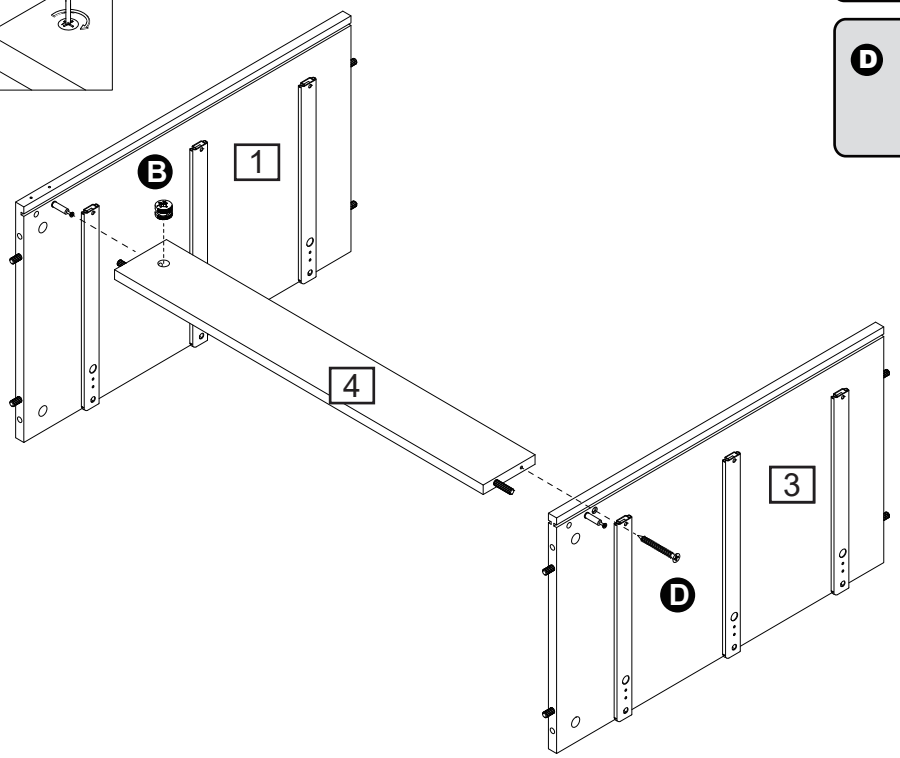

Attach part (4) to part (3) using screw (D) with a screwdriver.
Attach part (1) to part (4), then insert and secure cam lock (B) to part (4) to lock it.

Assembly Instructions

Step 7

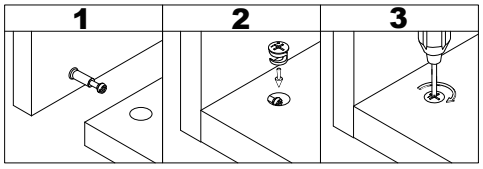

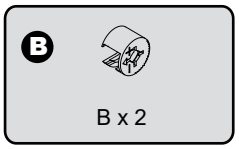

Attach part (5) to part (2,3), then insert and secure cam lock (B) to part (5) to lock it.

Step 8

Back panel groove

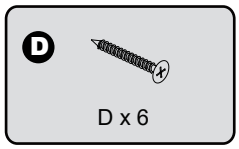

Attach part (6) to part (1, 2, 3) using screw (D) with a screwdriver.

Assembly Instructions

Step 9

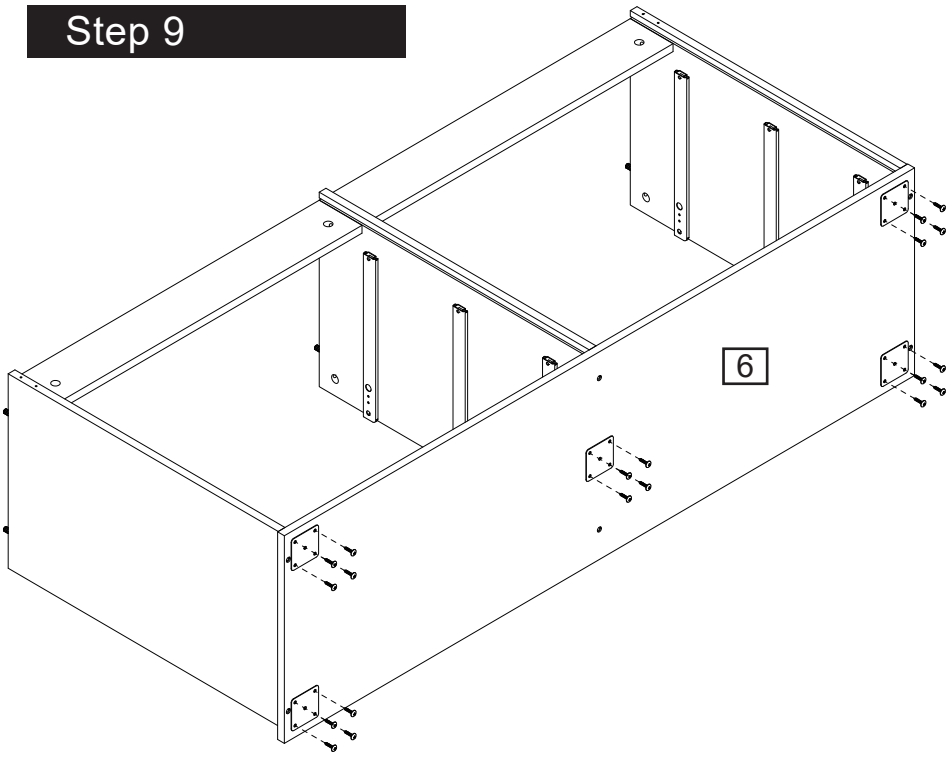

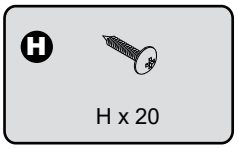

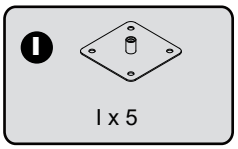

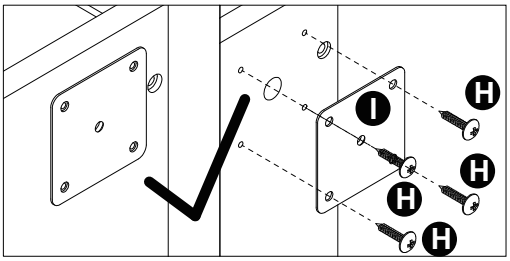

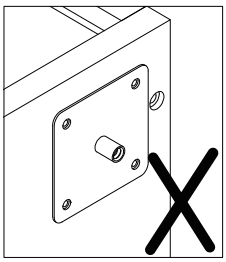

Attach metal plate (I) to part (6) using screw (H) with a screwdriver.

Step 10



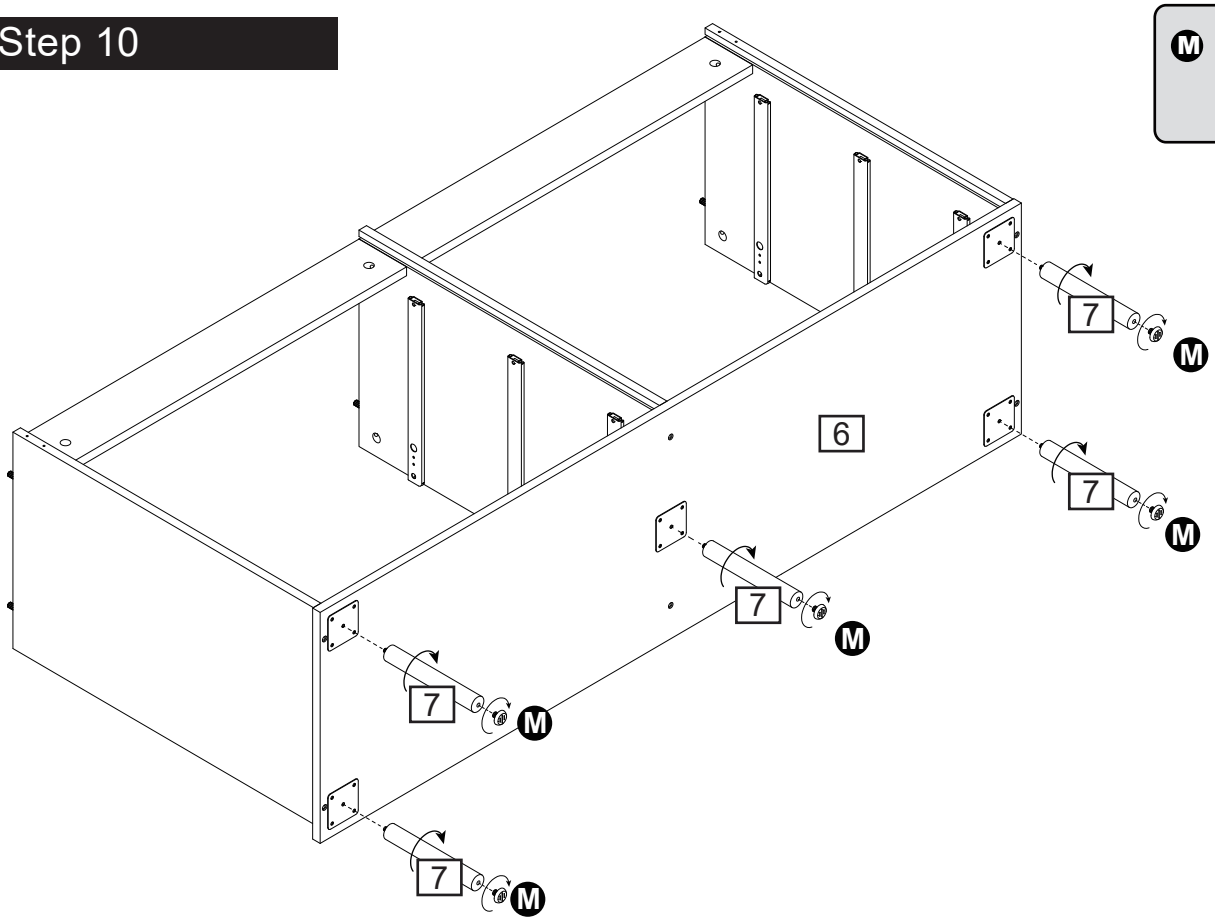

Screw the leg(7) into part (6),then screw the adjustable foot(M) into the leg(7).

Assembly Instructions

Step 11

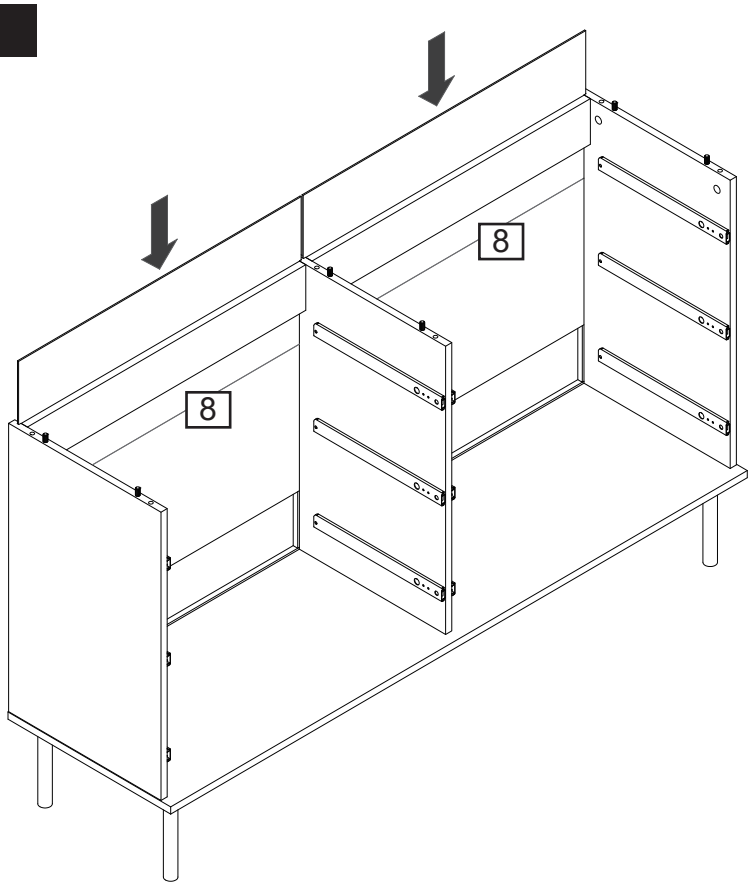

Slide the back panel (8) into grooves as per diagram.

Step 12

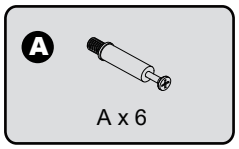

CAM-LOCK
Tighten until shoulder is flush with panel.Do not overtighten or undertighten(see example below)

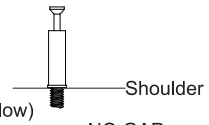

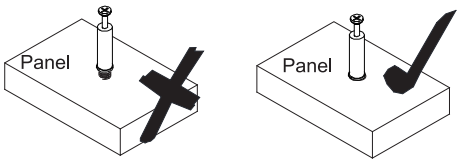

Attach cam bolt (A) to part (9) with a screwdriver.

Assembly Instructions

Step 13

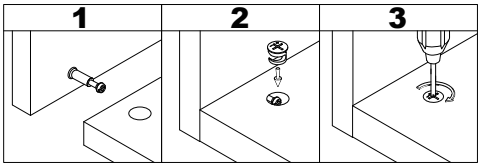

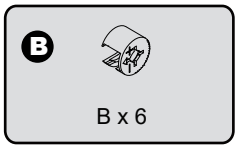

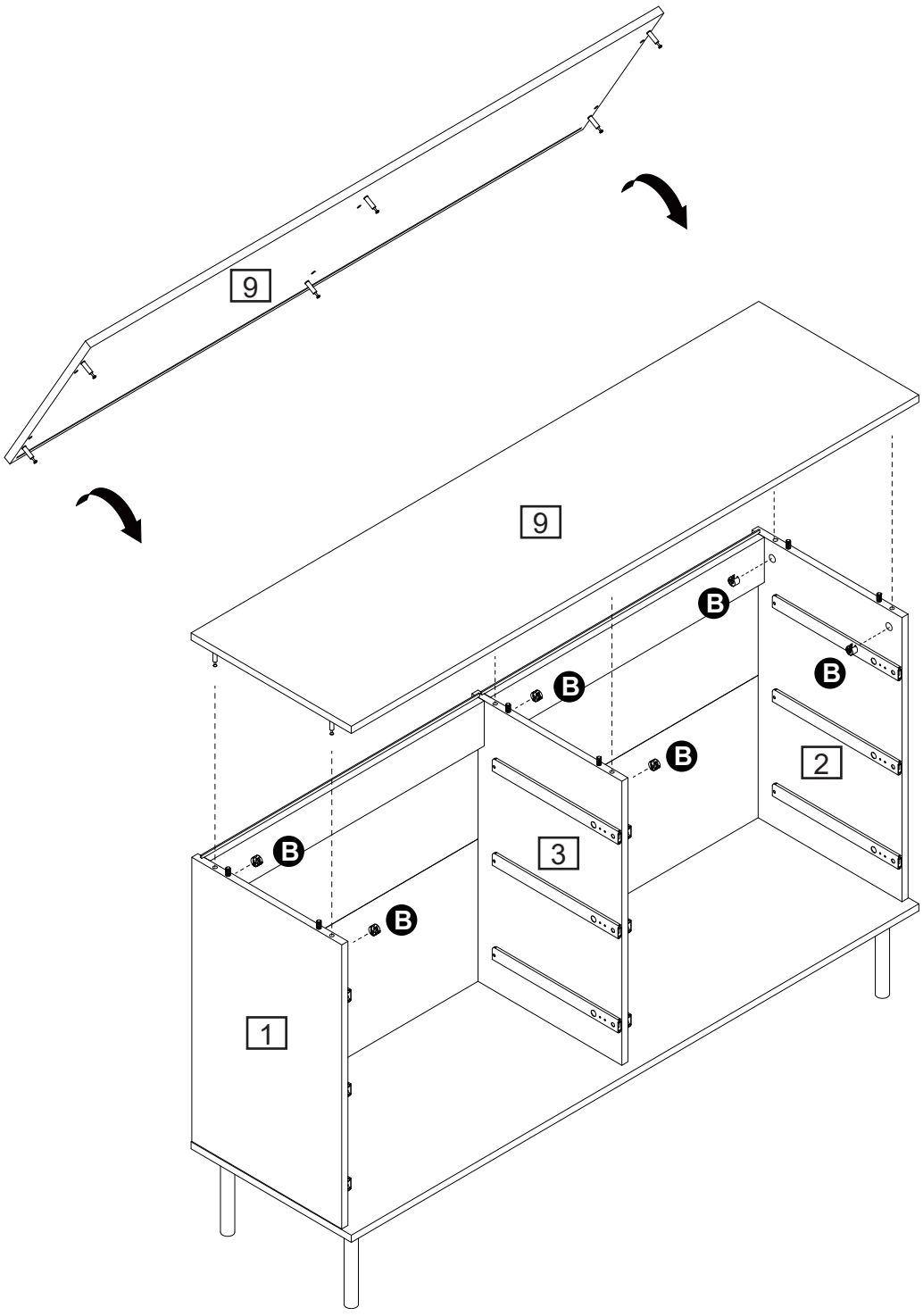

Attach part (9) to part (1, 2, 3), then insert and secure cam lock (B) to part (1, 2, 3) to lock it.

Assembly Instructions

Step 14

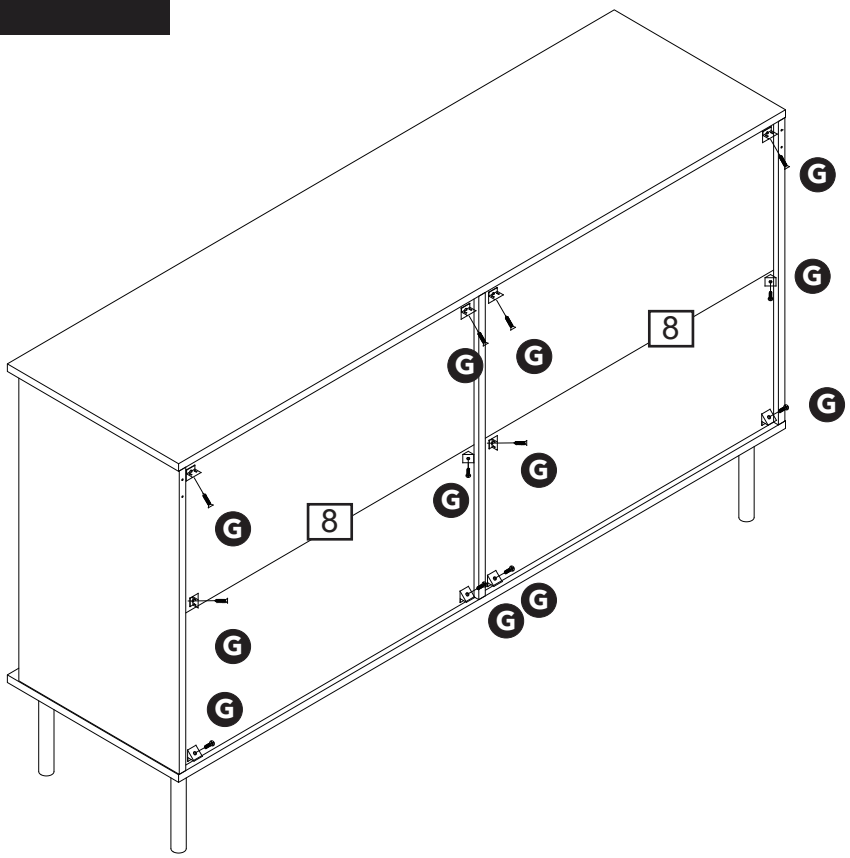

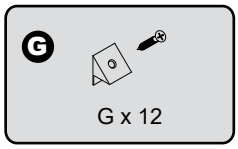

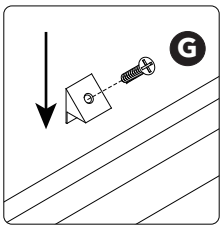

Attach plastic wedge (G) to back panel (8) using screw (G) with a screwdriver.

Step 15

CAM-LOCK
Tighten until shoulder is flush with panel.Do not overtighten or undertighten(see example below)

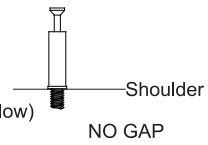

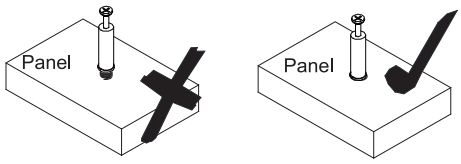

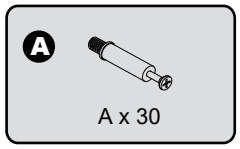

x3

Attach cam bolt (A) to part (15, 16) with a screwdriver.

Assembly Instructions

Step 16

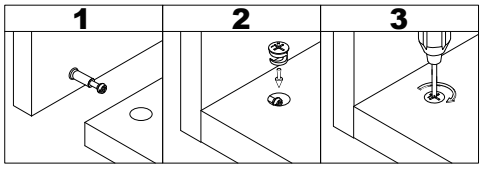

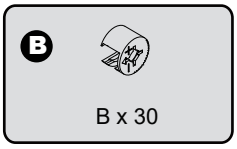

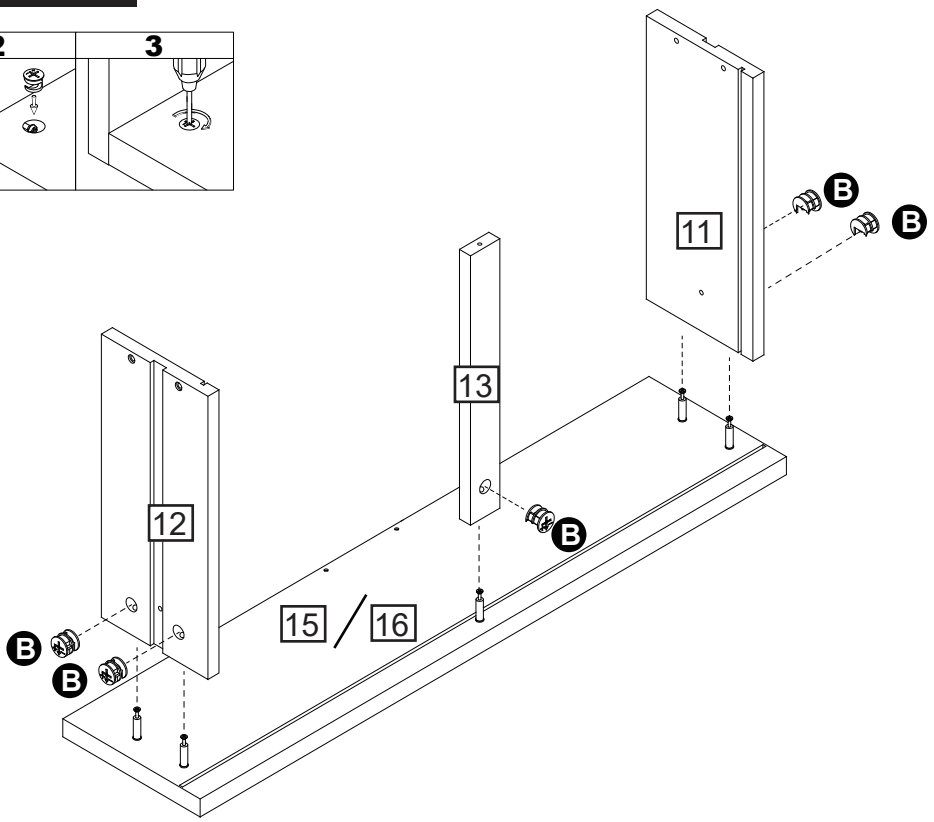

x3

Attach part (11, 12, 13) to part (15, 16), then insert and secure cam lock (B) to part (11, 12, 13) to lock it.

Step 17

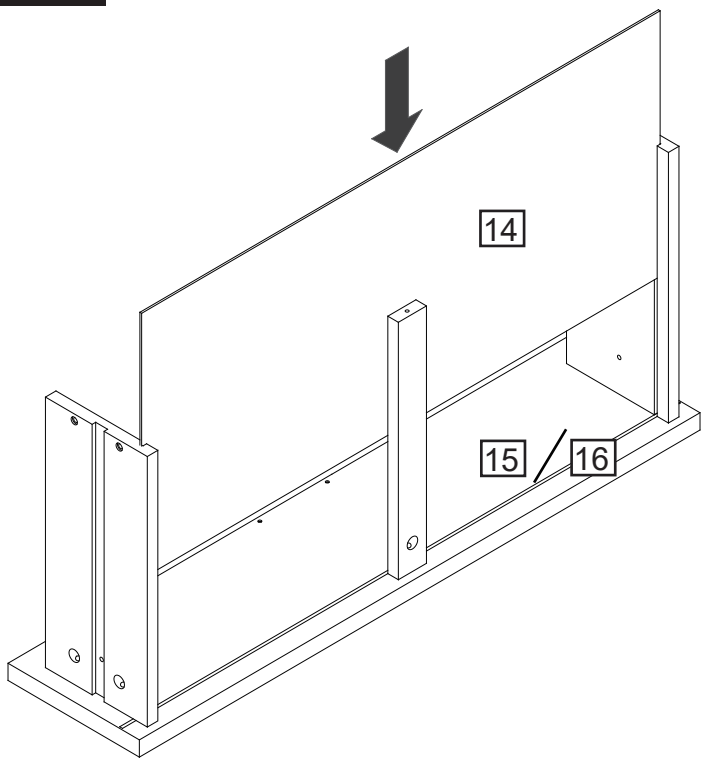

x3

Slide part (14) into grooves as per diagram.

Assembly Instructions

Step 18

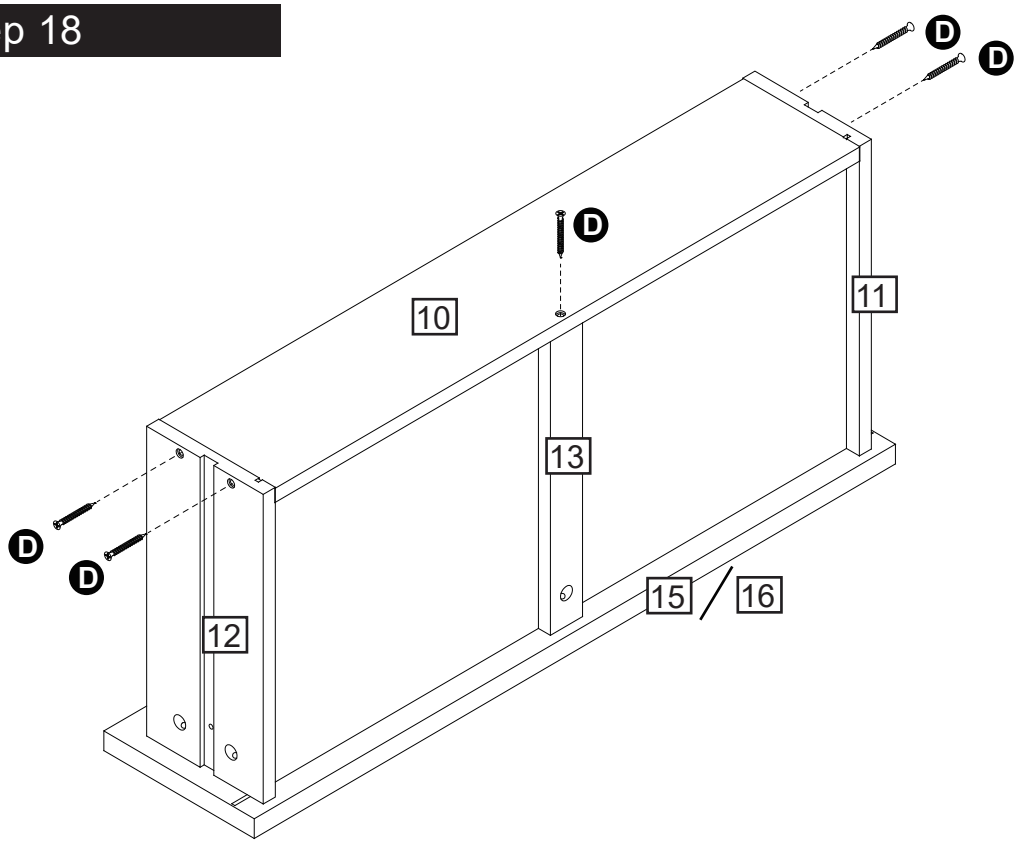

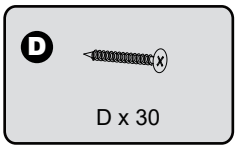

x3

Attach part (10) to part (11, 12, 13) using screw (D) with a screwdriver.

Step 19

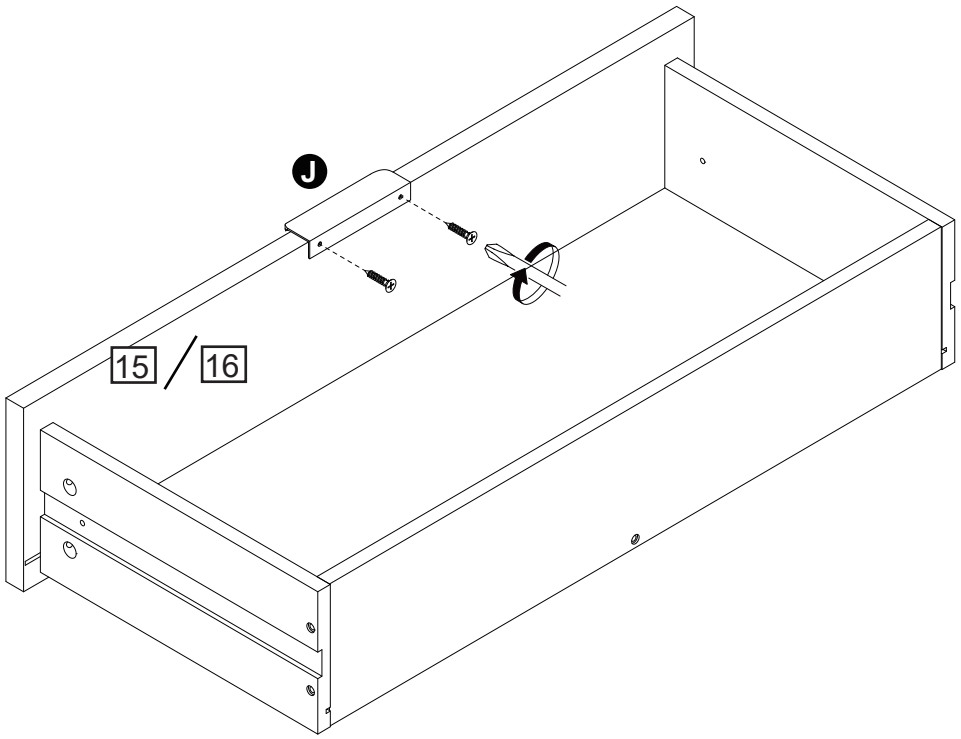

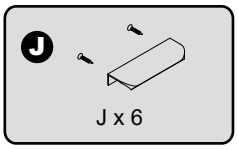

x3

Attach handle (J) to part (15, 16) using screw (J) with a screwdriver.

Assembly Instructions

Step 20

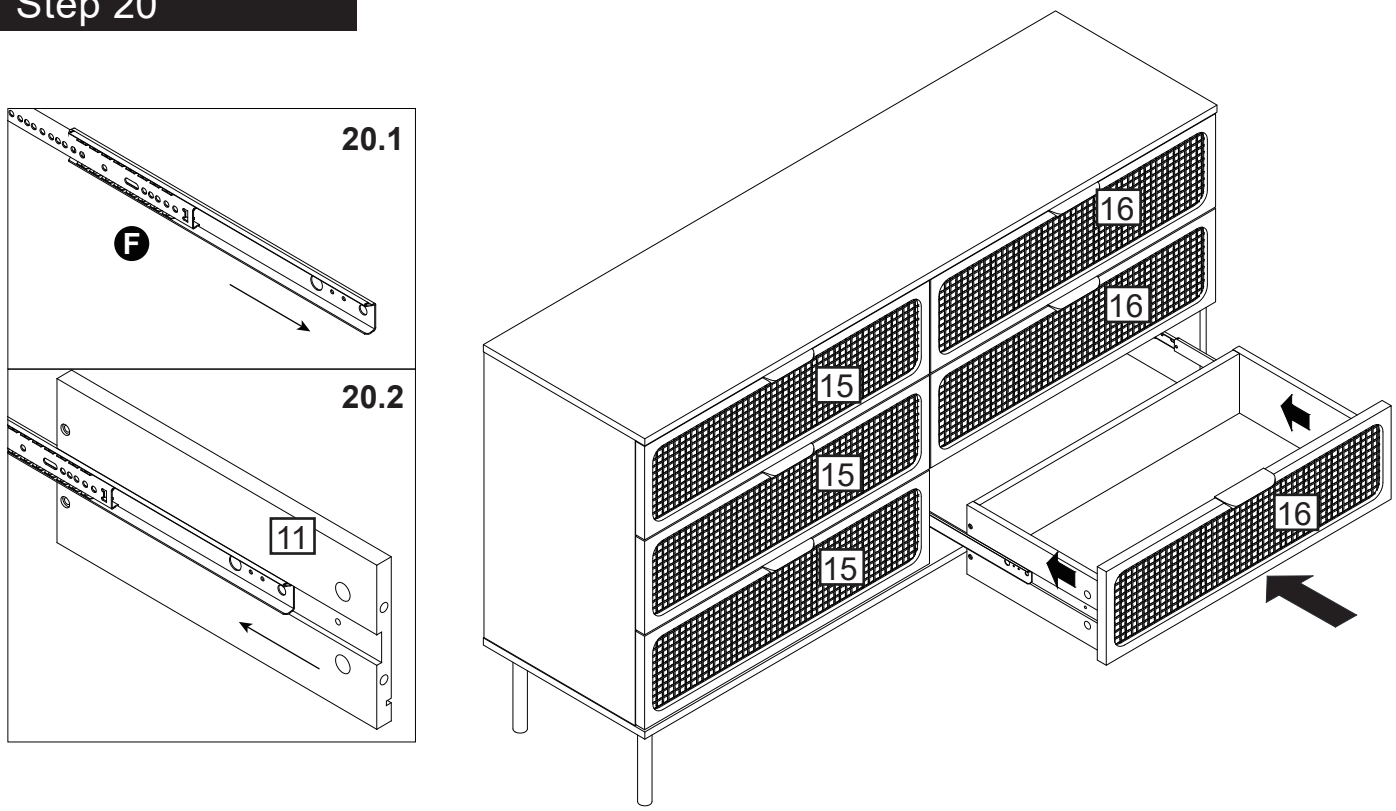

Slide the drawer slide (F) into grooves on both side of the drawer as per diagram.

Step 21

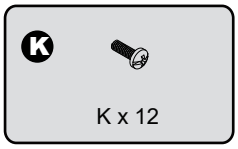

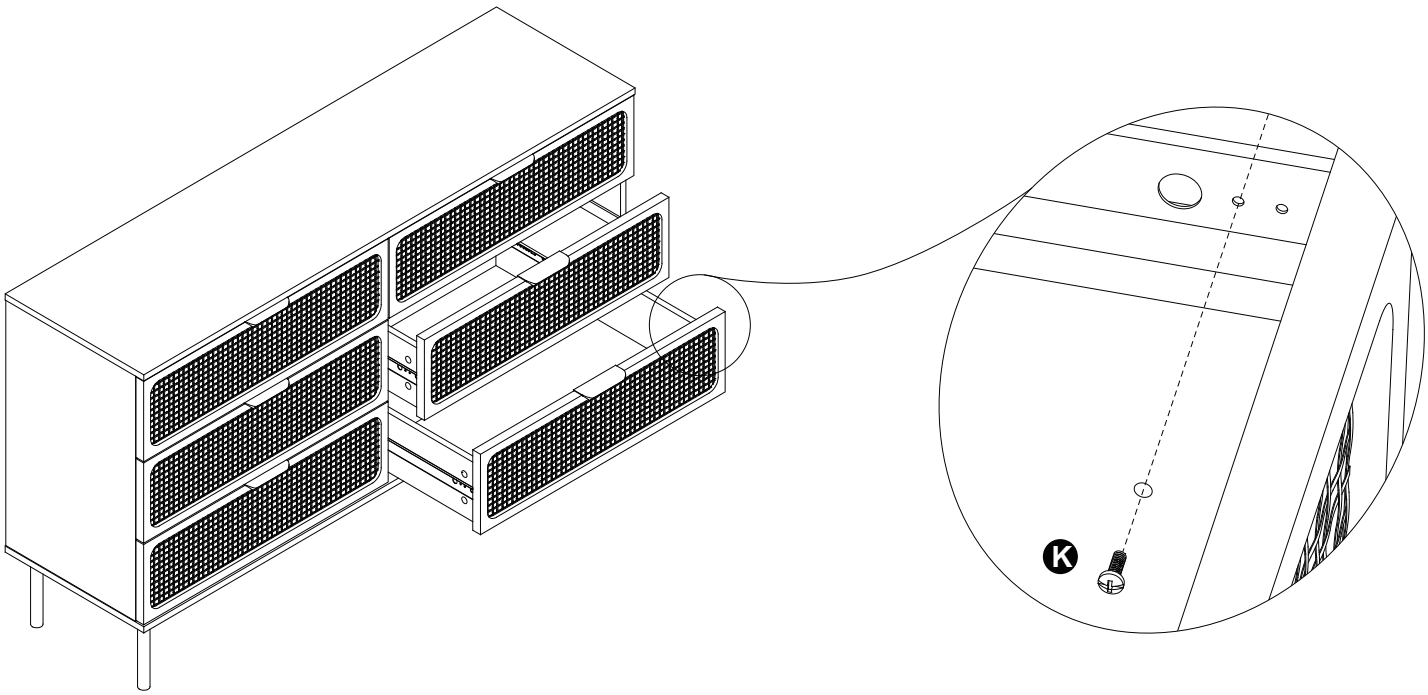

Use screw (K) to secure drawer slide (F) to the drawer.

Is your dresser chest door looking crooked or unevenly spaced?

If you’re still having trouble lining everything up, your next step should be to try to adjust the feet slightly to square up the dresser chest and doors. Follow the instructions below:

If the right side of the door appears to be hanging low, you can adjust the adjustable leveler on the front right until the door is better aligned.

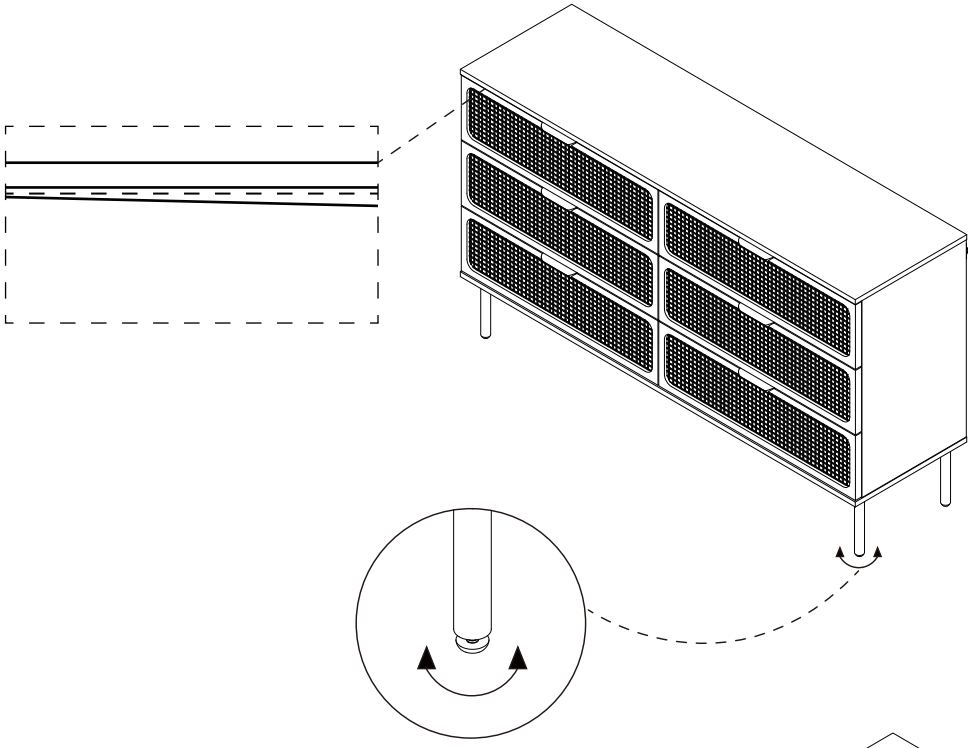

If the left side of the door appears to be hanging low, you can adjust the adjustable leveler on the front left until the door is better aligned.

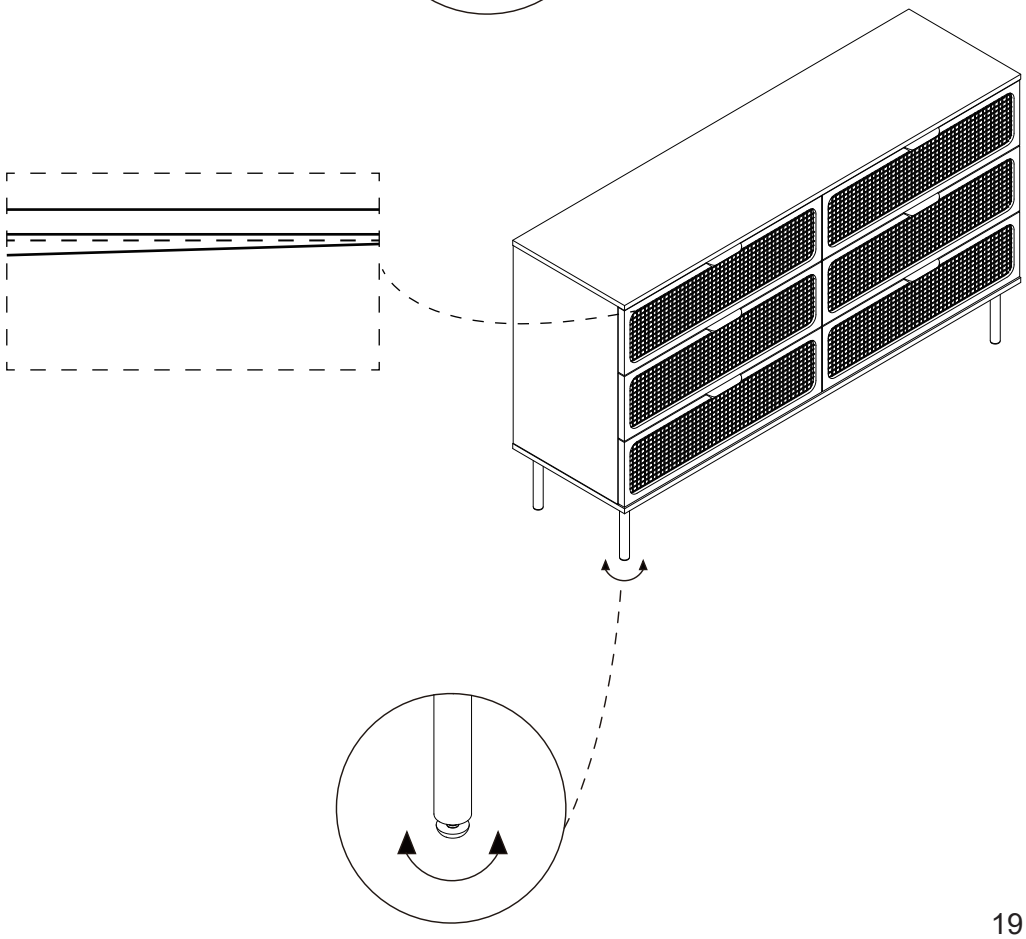

Assembly Instructions

Step 22

TIPPING RESTRAINTS KIT INSTALLATION GUIDANCE

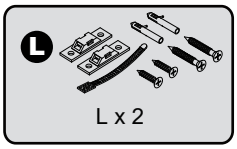

Different wall materials require unique wall fasteners.
The wall plugs (L5) and screws (L4) are designed for fixing to concrete walls only.
Please consult your local hardware store to ensure you are using the correct hardware for you wall type.

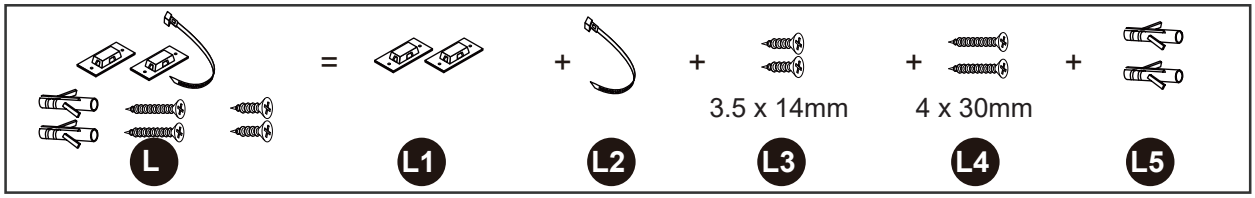

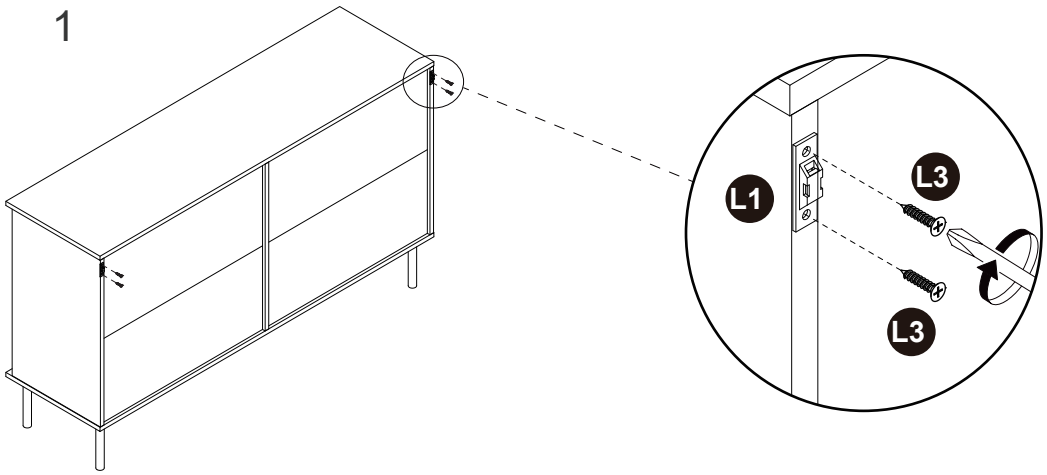

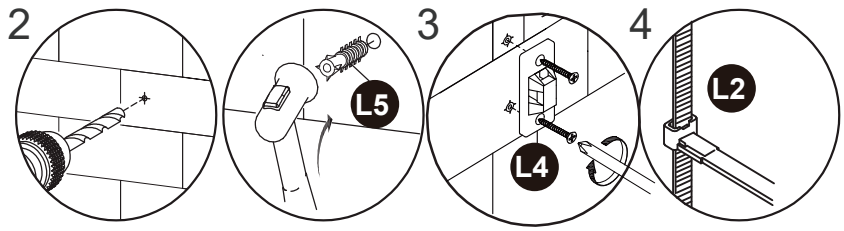

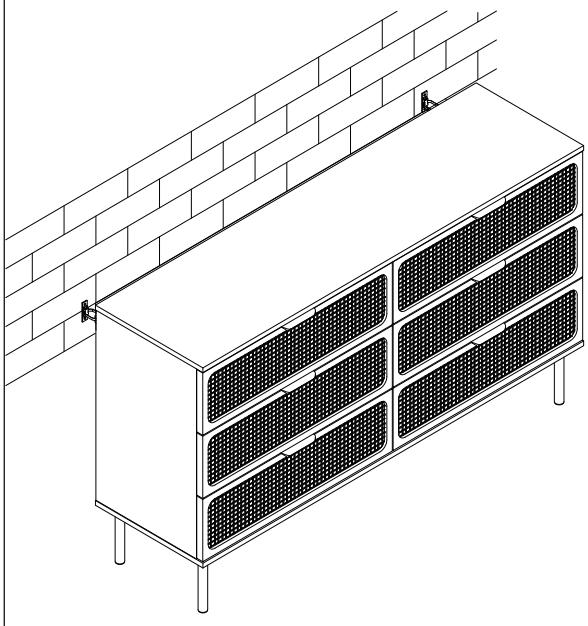

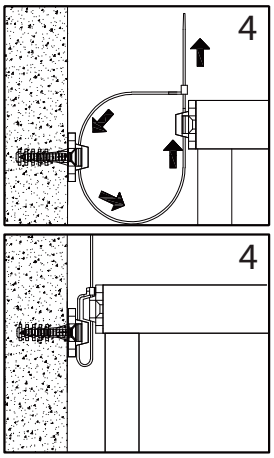

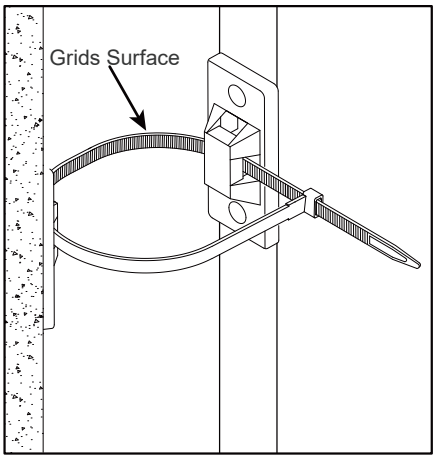

Installation Instructions :

1. **Attach bracket (L1) securely to the back side of the furniture using screw (L3) provided. Allow 8 - 10 cm from each side.**
2. **Please make a hole for wall plugs position on the wall and minimum 15 mm below bracket secured to the back of unit attach the wall plugs (L5).**
3. **Locate the other bracket (L1) on the wall over wall plugs (L5). Place furniture into position so both brackets (L1) are vertically in the line.**
4. **Lace the end of the restrains strap through the larger hole in each bracket. Ensure the restrains strap with grids surface facing the inner** loops. Bring both ends together and slide the flat end through the locking end and draw it through until all slack is remove**d.**
5. **Make sure that the strap is securely laced & locked.**

A Guide to Wall Mounting & Fixings

Important note:

If plastic wall plugs (rawl plugs) are supplied with your product, e.g.:



- these are only suitable for use in masonry walls.

If you are in any doubt about the correct wall plugs for your wall, seek professional advice.

Failure of the product due to using the incorrect fixings is the responsibility of the installer.

Important: when drilling into walls always check that there are no hidden wires or pipes etc.

Make sure that the screws and wall plugs being used are suitable for **supporting your unit. Consult a qualified tradesperson if you** are unsure.

Hints:

1: General rule: always use a larger screw and wall plug if you are not sure.
2: Ensure you use the recommended drill bit to match the wall plug and hole size.
3: Ensure you drill the hole horizontally; do not force the drill or enlarge the hole.
4: Take extra care when drilling high walls, ceilings and ceramic tiles. Ensure wall plugs are inserted beyond the thickness of the ceramic tiles to avoid the tiles splitting or cracking.
5: Ensure wall plugs are well fitted and are a tight fit in the drilled hole.

Types of walls

You can use one of the following types of wall plug if your walls are made of brick, breeze block, concrete, stone or wood.

No.1 “General Purpose” wall plug

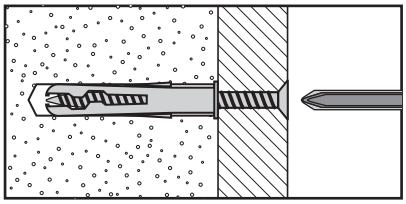

Generally aerated blocks should not be used to support heavy loads, use a specialist fitting in this case. For light loads, general purpose wall plugs can be used.

No.3 “Cavity Fixing” wall plug

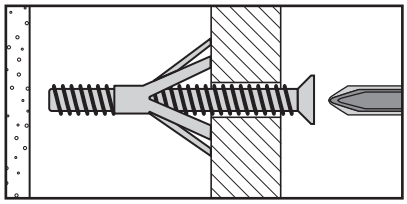

For use with plasterboard partitions or hollow wooden doors.

No.5 “Hammer Fixing” wall plug

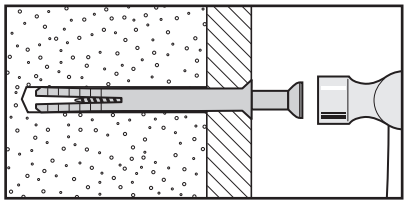

For use with walls stuck with plasterboard. The hammer fixing allows it to be fixed to the wall rather than the plasterboard. Always check the fixing is secure to the retaining wall.

No.2 “ Plasterboard” wall plug

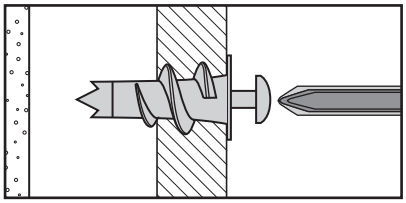

For use when attaching light loads onto plasterboard partitions.

No.4 “ Cavity Fixing – Heavy Duty” wall plug

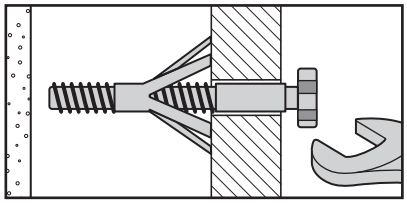

For use when fitting or supporting heavy loads such as shelving, wall cabinets and coat racks.

No.6 “ Shield Anchor” wall plug – heavy loads

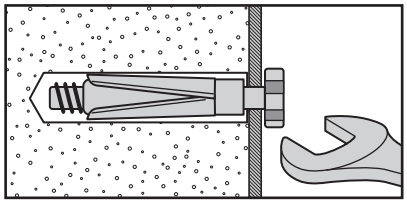

For use with heavier loads such as TV and HiFi speakers and satellite dishes etc.

Care & Maintenance

Safety: always check the fitting and location to ensure your safety in and around the home.

Fitting: from time to time check the fitting to ensure the wall plugs or screws do not become loose.