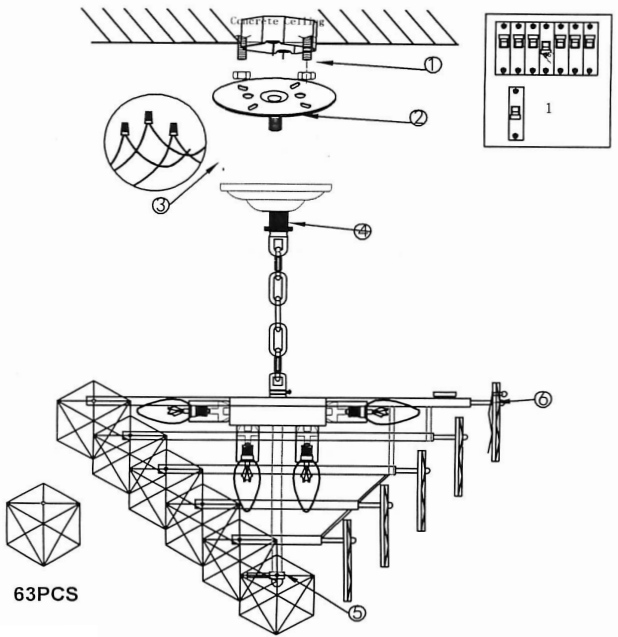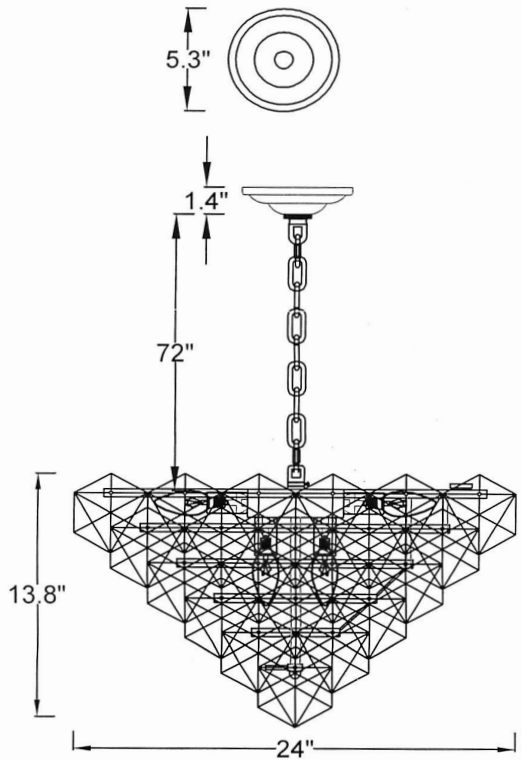Assembling Instruction