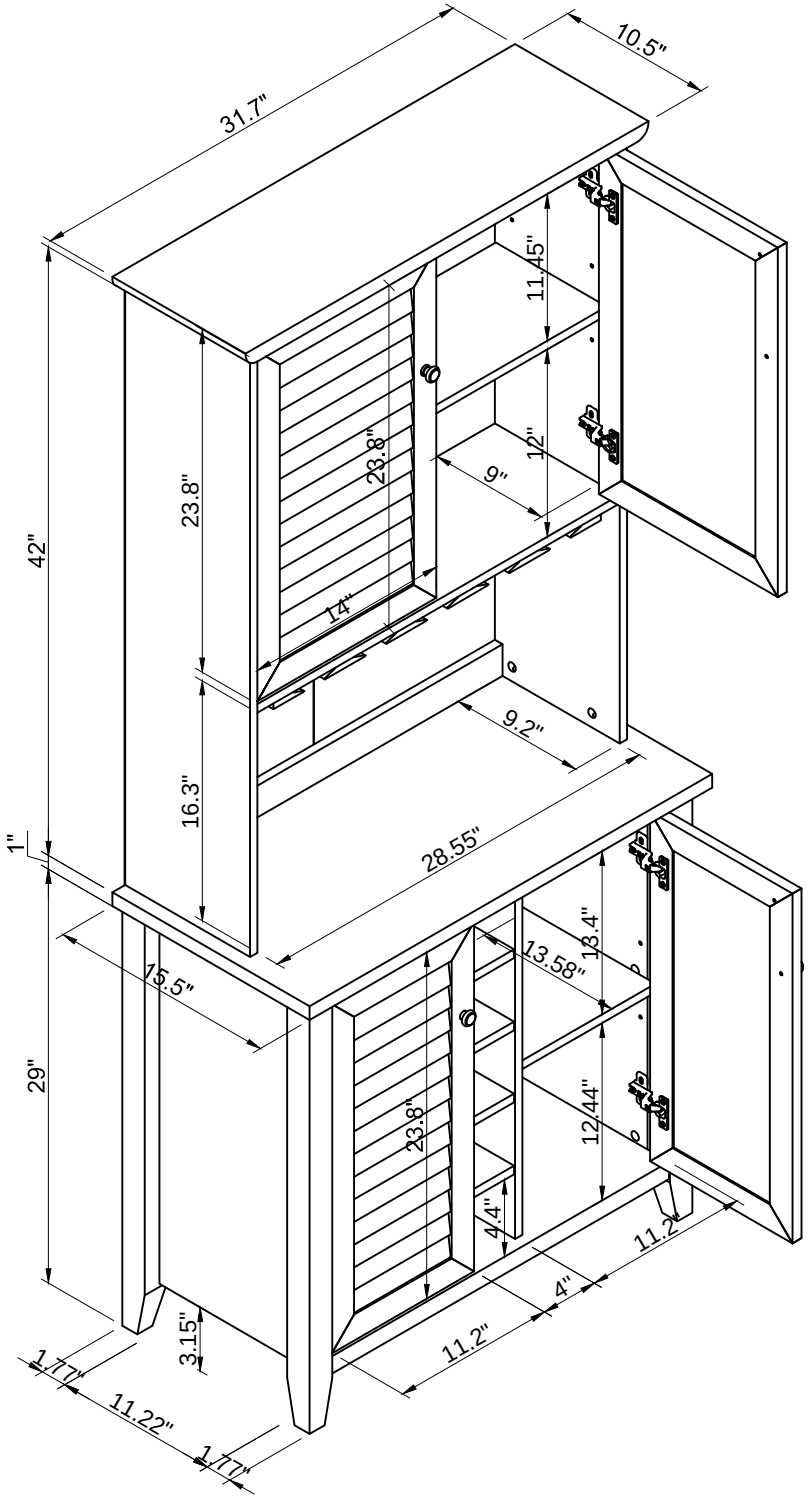
31.7"
10.5"
42"
23.8"
23.8"
11.45"
12"
9"
14"
9.2"
16.3"
1"
28.55"
15.5"
29"
13.4"
13.58"
23.8"
12.44"
4.4"
11.2
4"
11.2"
3.15"
1.77"
11.22"
1.77"