Assembly Instruction

ITEM:SF-CT474

Parts List			
Item	Description	Part	Qty Pcs
A	Top Frame	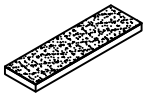	1
B	Base.	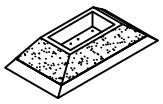	1
C	Foot		2

HardwareList			
Item	Description	Part	Qty Pcs
1	Allen Wrench		1
2	Handle Bolt		12

1、Please check all items against the product list to ensure nothing is missing. Contact us at any time if any parts are not included.
2、Before installation, place the packing foam from the box or prepare a thick cushion on the floor to protect the mirrored surface from scratches.

STEP 1

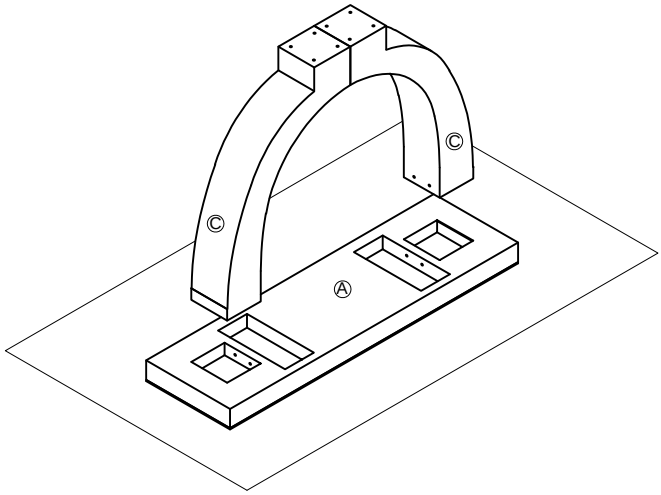

Place EPS or blankets underneath the product to prevent damage to the miror surace

Two people work together to lift tje top and slowly fip it over

STEP 2

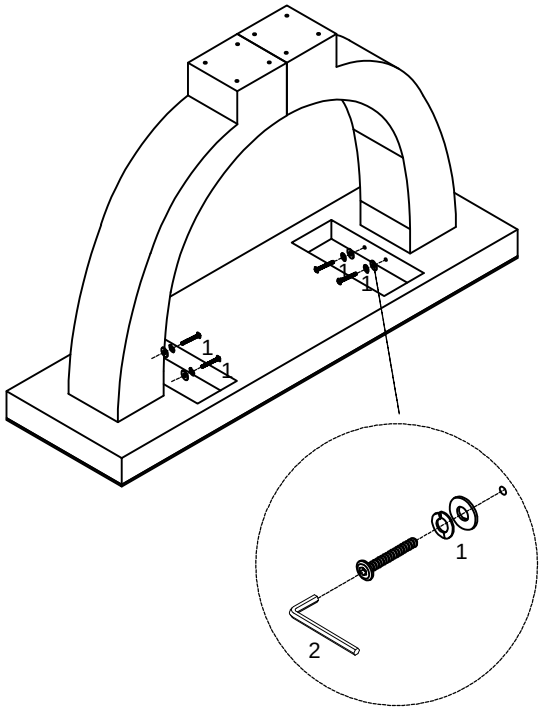

STEP 3

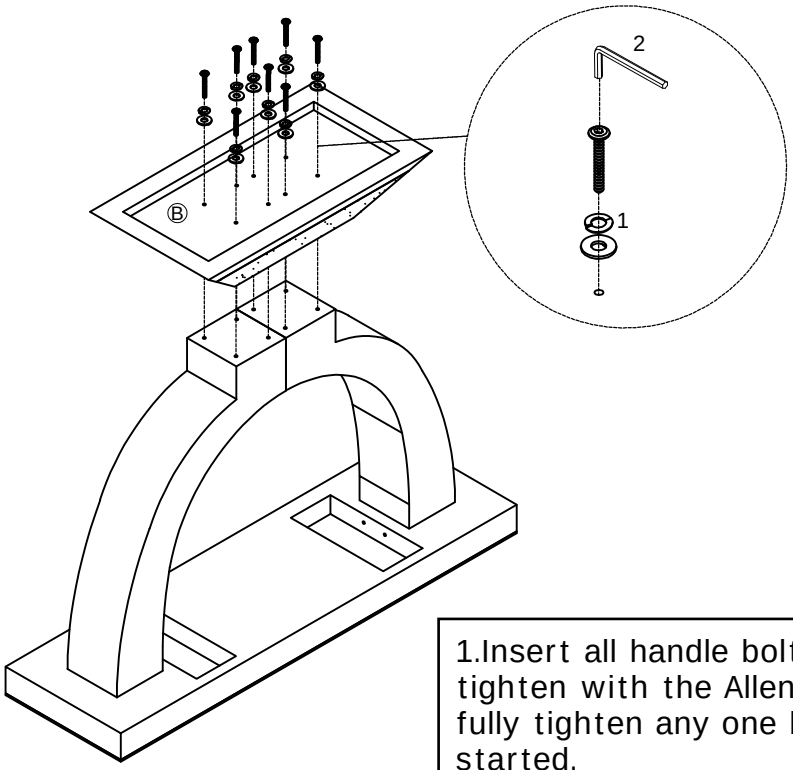

1.Insert all handle bolts first, then tighten with the Allen wrench. Don't fully tighten any one bolt until all are started.
2.Don't tighten bolts one by one—this can misalign holes and the remaining screws won't fit.

STEP 4

