2 DRAWER BEDSIDE CABINET

Assembly instruction- Please keep for future reference

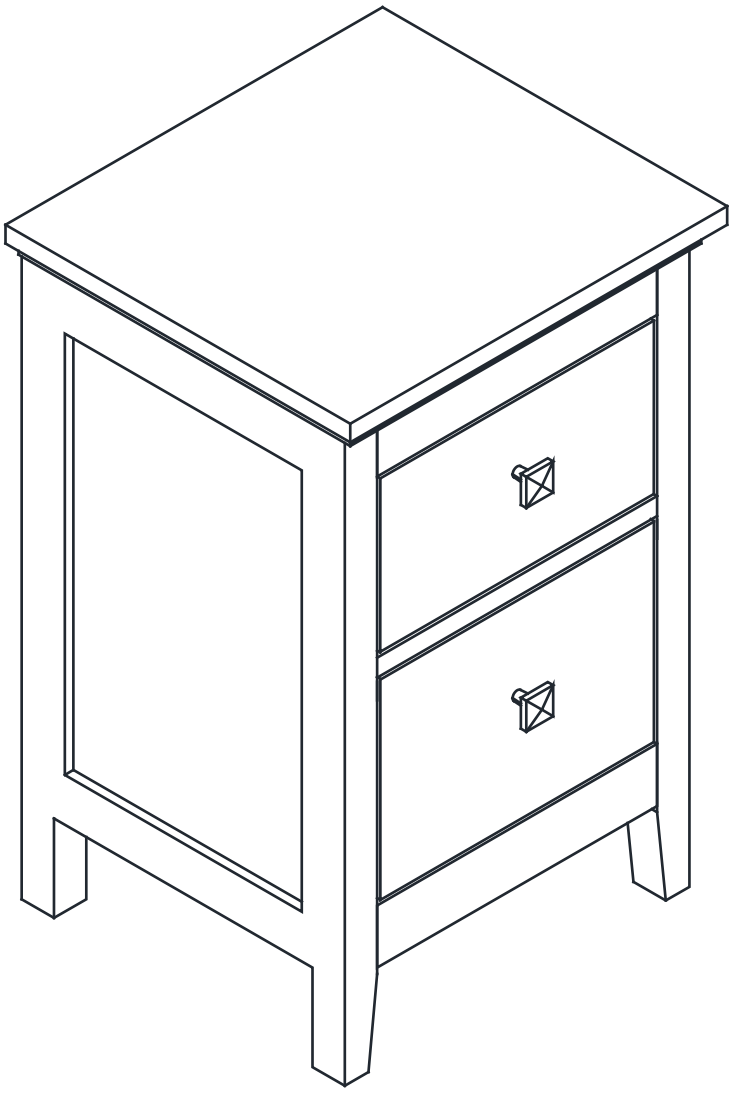

Dimensions	No.People	Assembly Time	
Width: 49 cm Depth: 40 cm Height: 61 cm		40 mins (approx)	

Important-Please read these instructions fully before starting assembly

⚠ Safety and Care Advice

Important-Please read these instructions fully before starting assembly

- Check you have all the components and tools listed on pages 2,3 and 4.
- Remove all fittings from the plastic bags and separate them into their groups.
- Keep children and animals away from the work area, small parts could choke if swallowed.
- Make sure you have enough space to lay out the parts before starting.
- Do not stand or put weight on the product, this could cause damage.
- Assemble the item as close to its final position (in the same room) as possible.
- Assemble on a soft, level surface to avoid damaging the unit or your floor.
- We do not recommend the use of power drill/drivers for inserting screw, as this could damage the unit. only use hand screwdrivers.

- Dispose of all packaging carefully and responsibly.

Care and Maintenance

- Only clean using a damp cloth and mild detergent, do not use bleach or abrasive cleaners.
- From time to time check that there are no loose screws on this unit.
- This product should not be discarded with household waste.Take to your local authority waste disposal centre.

If you are unhappy with the product and wish to return it,
please following the retailer's returns procedure.

Components - Panels

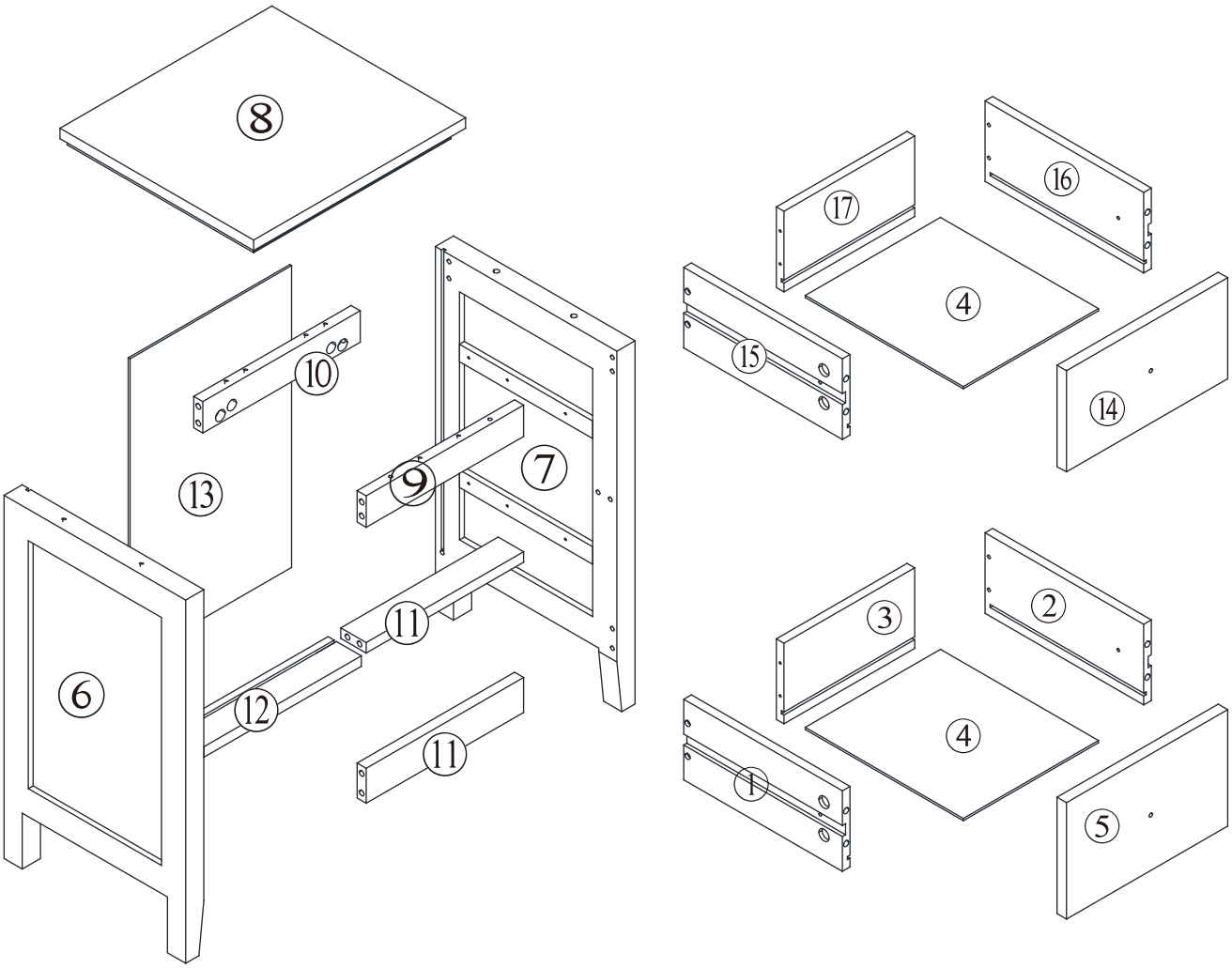

Components - Panels

Please check that you have all the components listed below before constructing your item.

Part No	Description	Qty	Thickness (mm)
1	Drawer Left Side Panel	1	12 mm
2	Drawer Right Side Panel	1	12 mm
3	Drawer Back Panel	1	12 mm
4	Drawer Bottom Panel	2	3 mm
5	Drawer Front Panel	1	15 mm
6	Left Side Panel	1	30 mm
7	Right Side Panel	1	30 mm
8	Top Panel	1	30 mm
9	Upper Front Stripe	1	15 mm
10	Upper Back Stripe	1	15 mm
11	Lower Front Stripe	2	15 mm
12	Lower Back Stripe	1	15 mm
13	Back Panel	1	3 mm
14	Drawer Front Panel	1	15 mm
15	Drawer Left Side Panel	1	12 mm
16	Drawer Right Side Panel	1	12 mm
17	Drawer Back Panel	1	12 mm

Important-Please read these instructions fully before starting assembly

Components - Fixings

Please check that you have all the components listed below before constructing your item.

Note: The quantities below are the correct amount to complete the assembly. In some cases more fittings may be supplied than are required.

HARDWARE

A x 20+2	B x 20+2	C x 18+1	M4 x 35mm D x 8	E x 4
F x 2	M4 x 12mm G x 8	M4 x 18mm H x 2	M4 x 40mm J x 2	M4 x 8mm K x 4
M3 x 14mm L x 4				

Tools Required (Not Provided)

Ruler - Use this to measure your screws (mm)

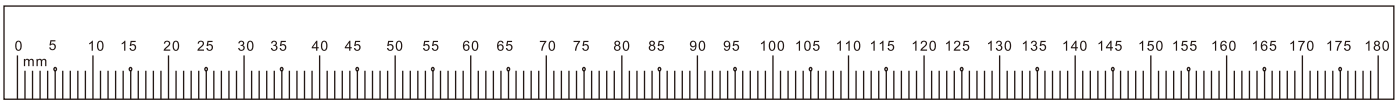

Important-Please read these instructions fully before starting assembly

Assembly Instructions

Step 1

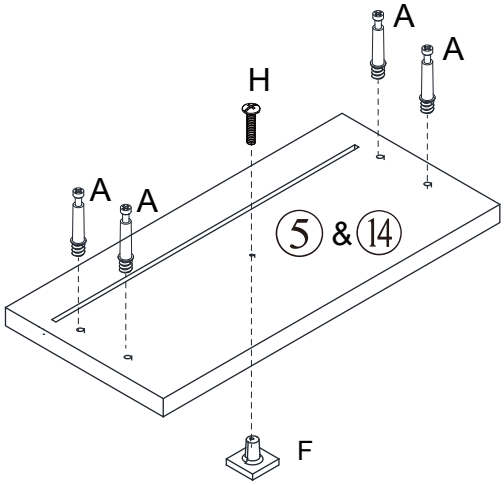

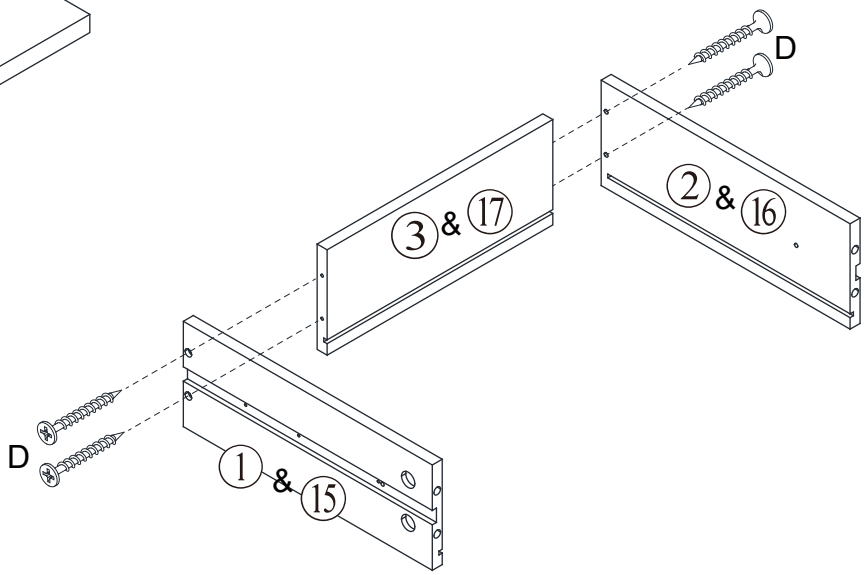

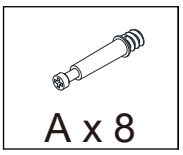
A x 8

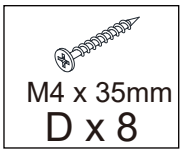
M4 x 35mm
D x 8

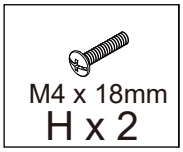
M4 x 18mm
H x 2

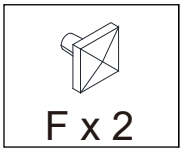
F x 2

Step 2

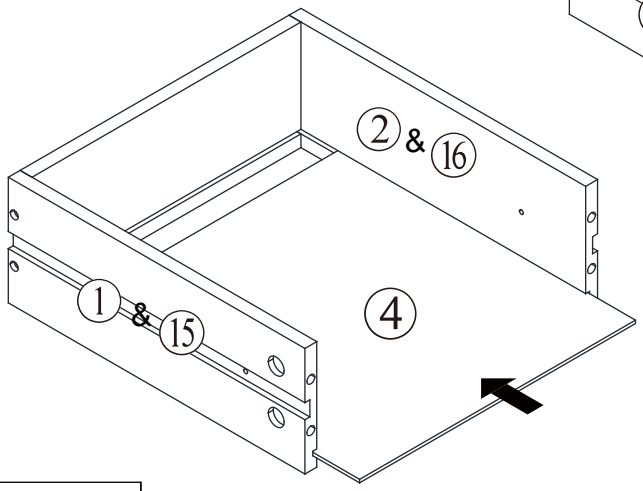

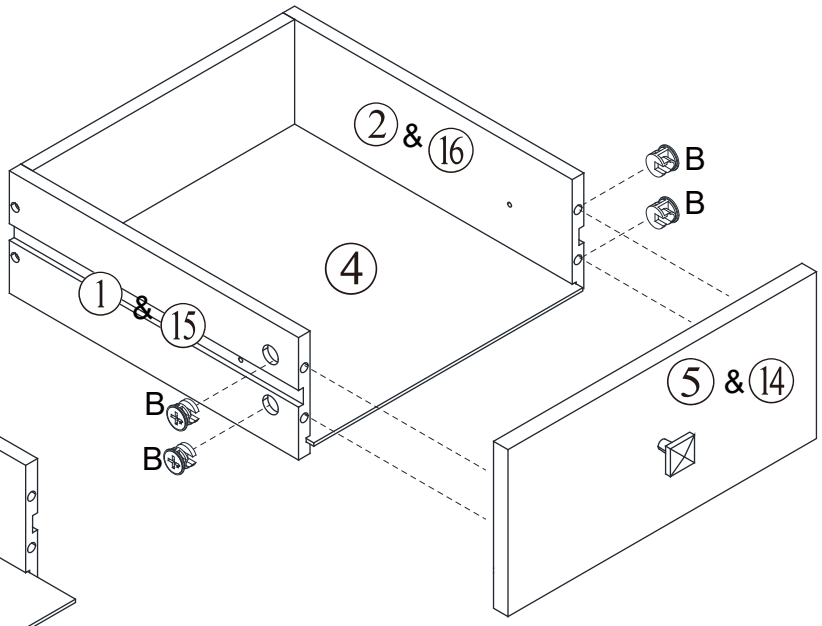

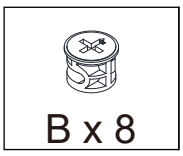
B x 8

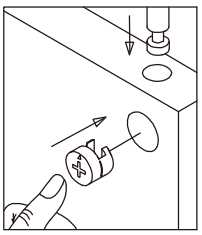

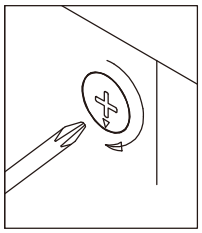

Step 3

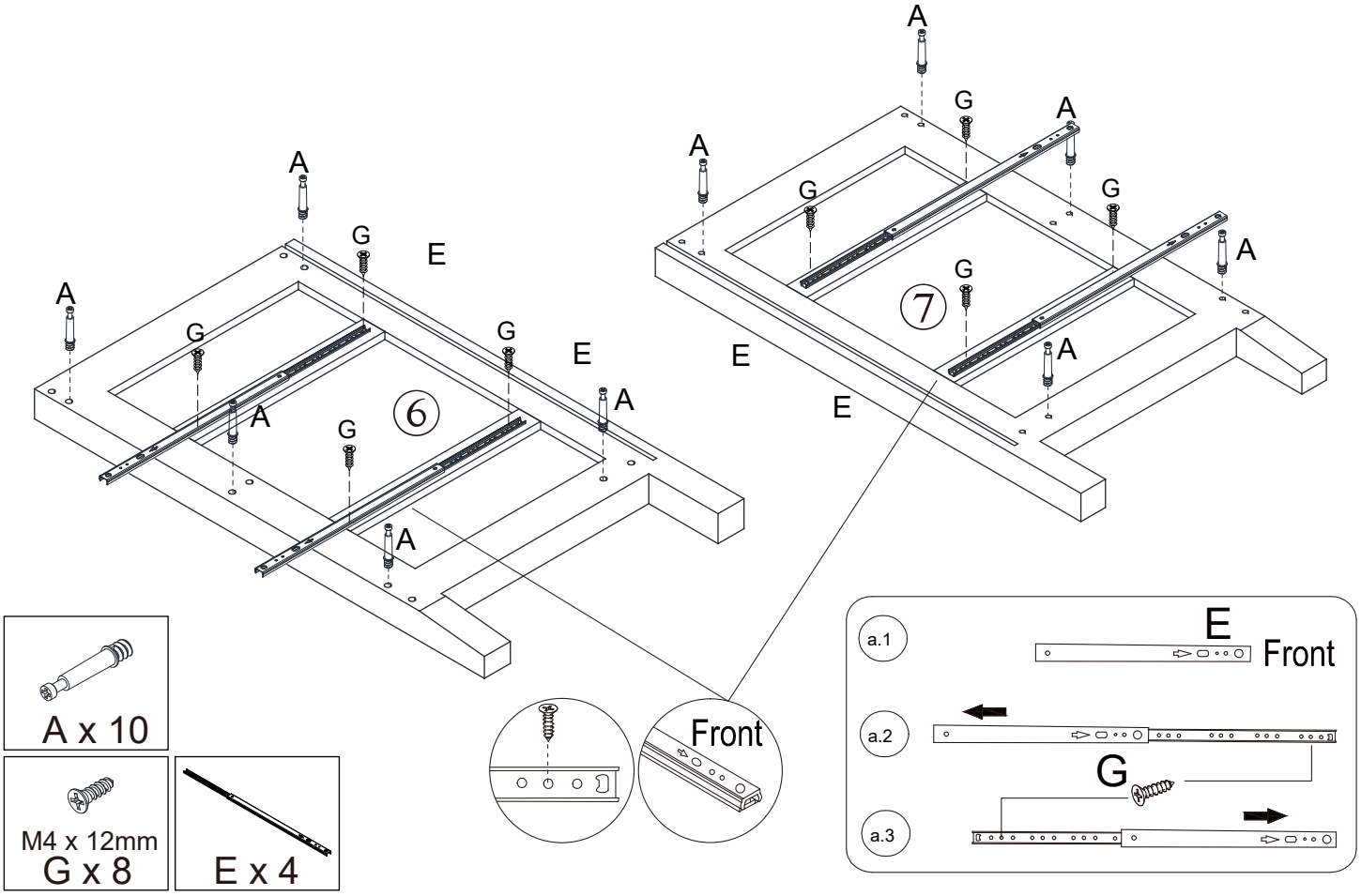

Step 4

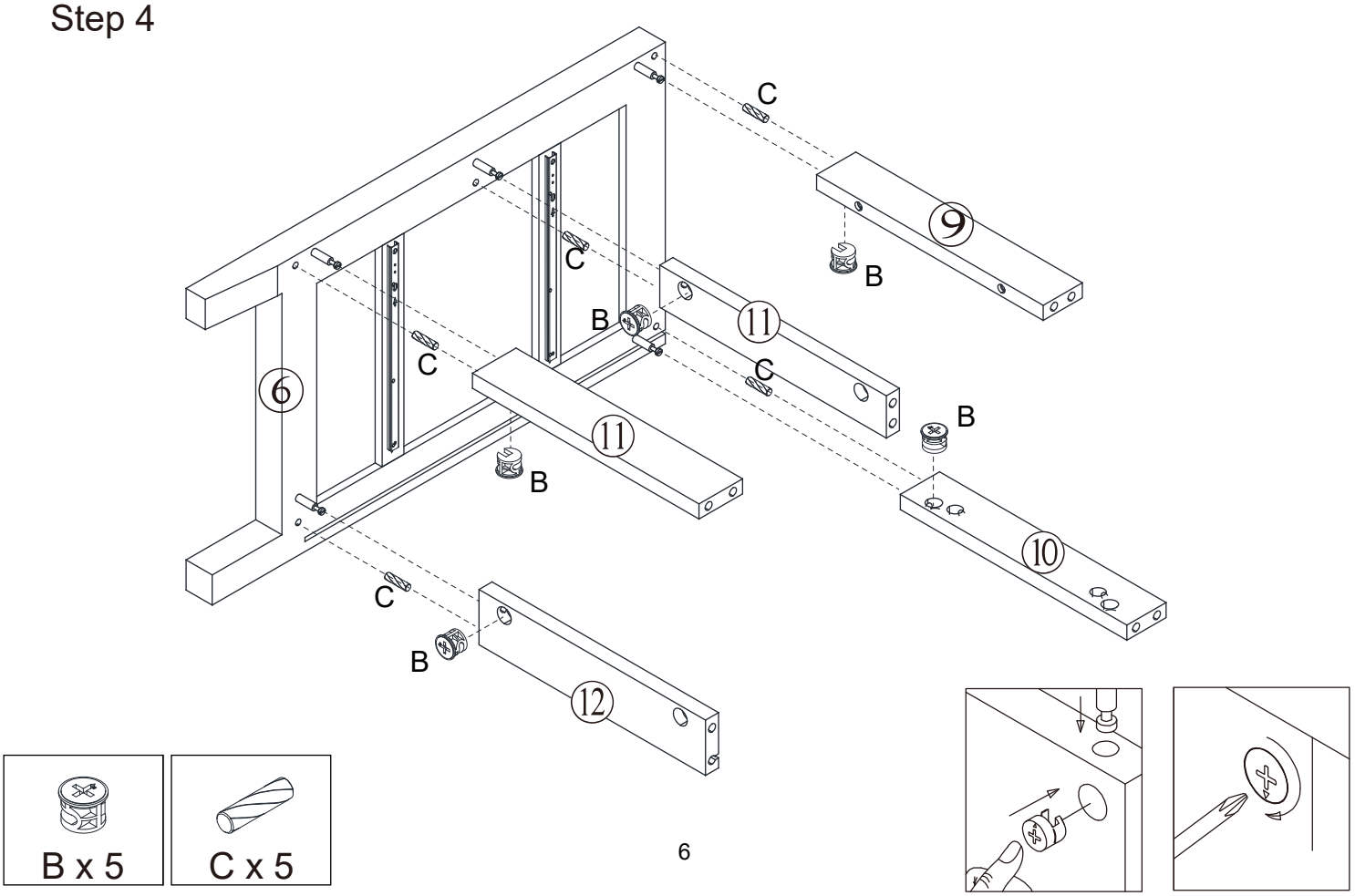

Step 5

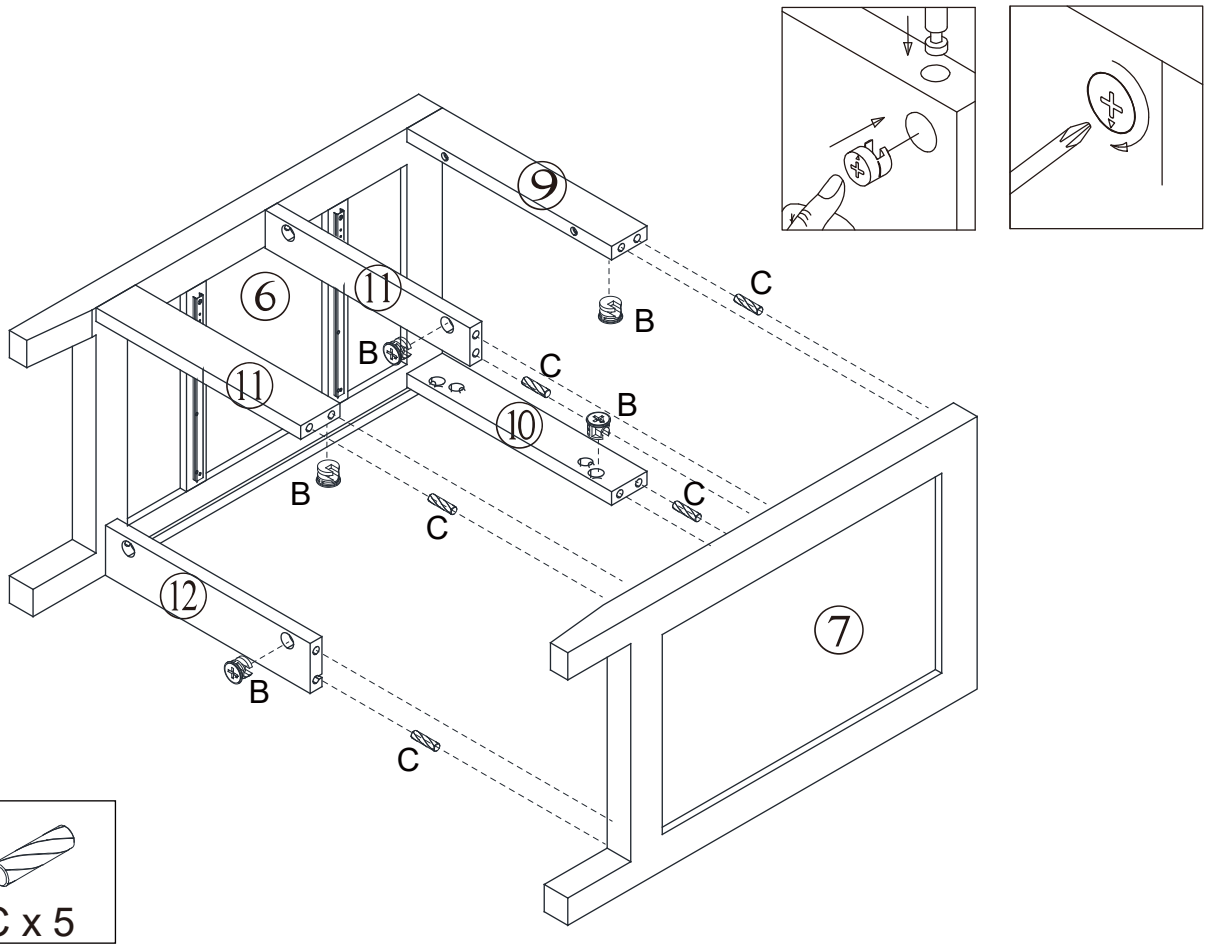

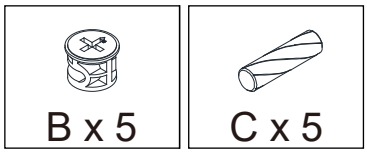

Step 6

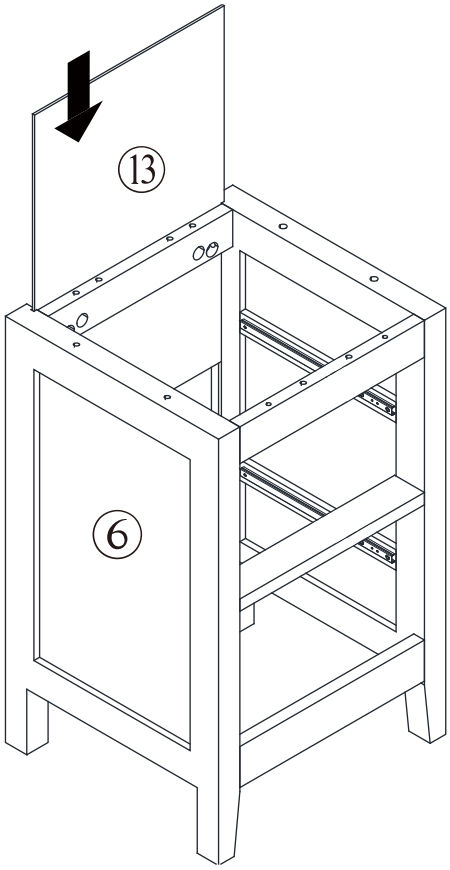

Step 7

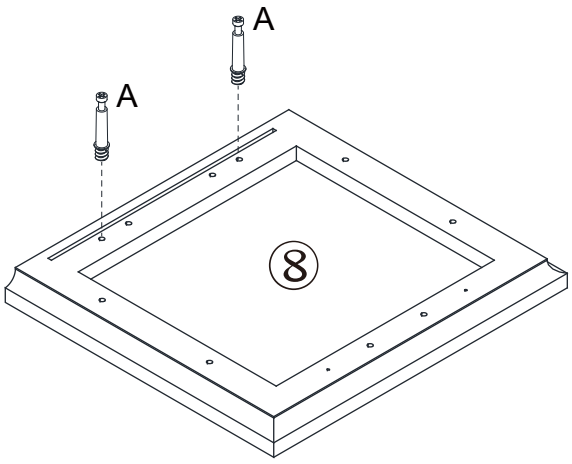

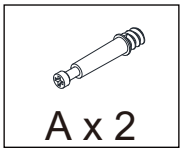

Step 8

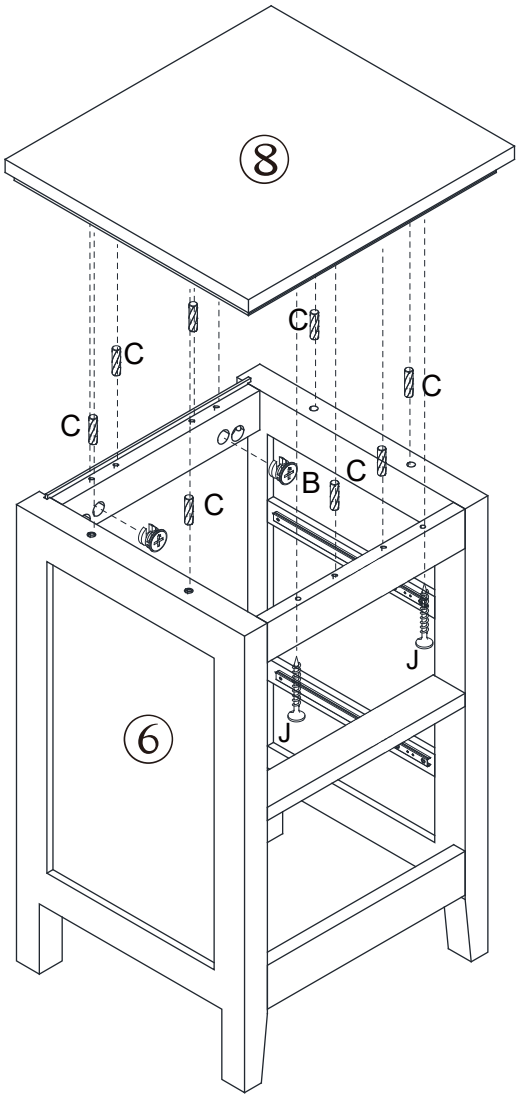

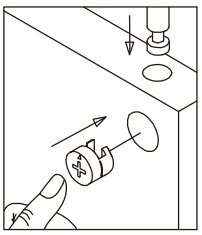

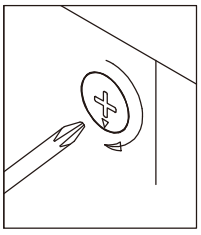

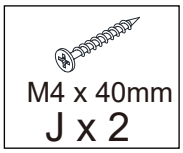

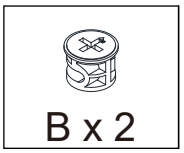

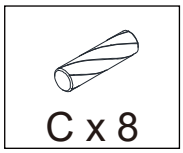

Step 9

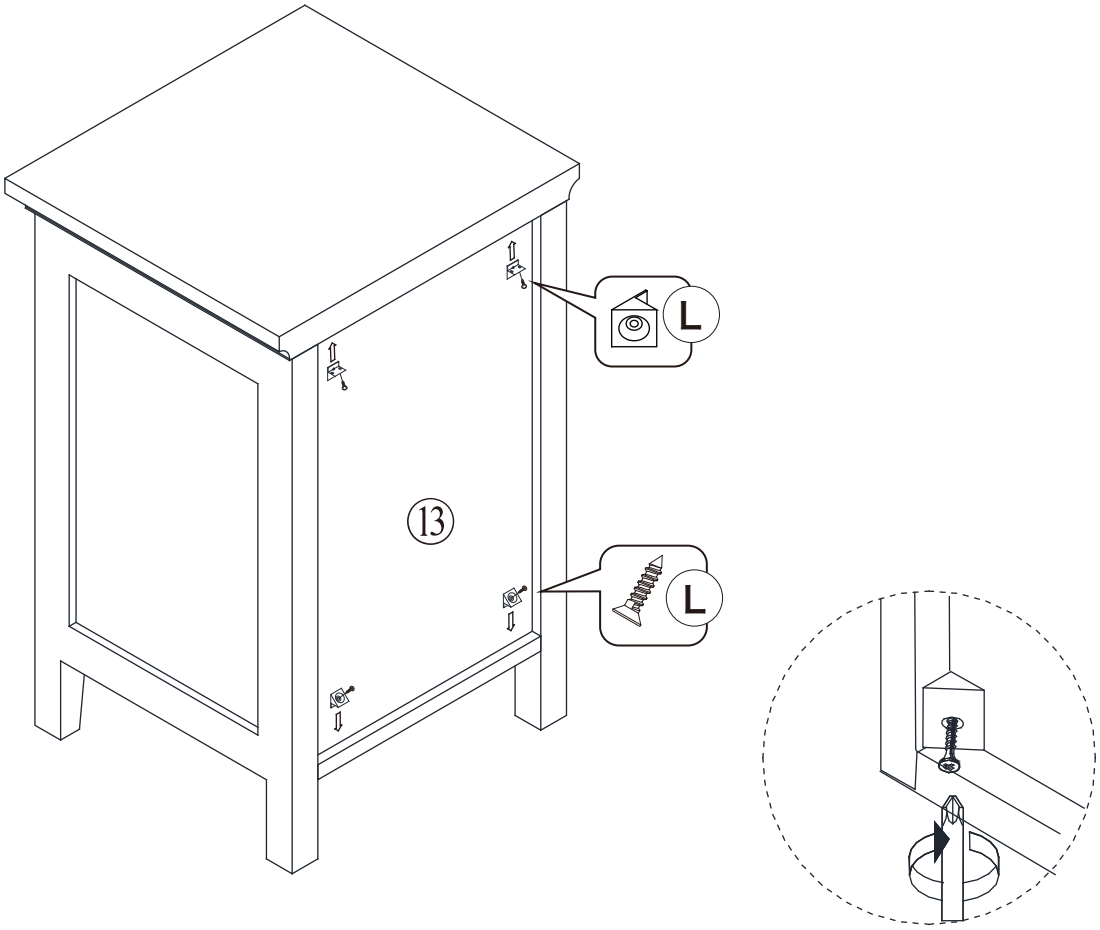

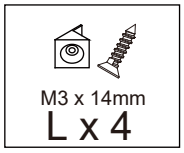

Step 10

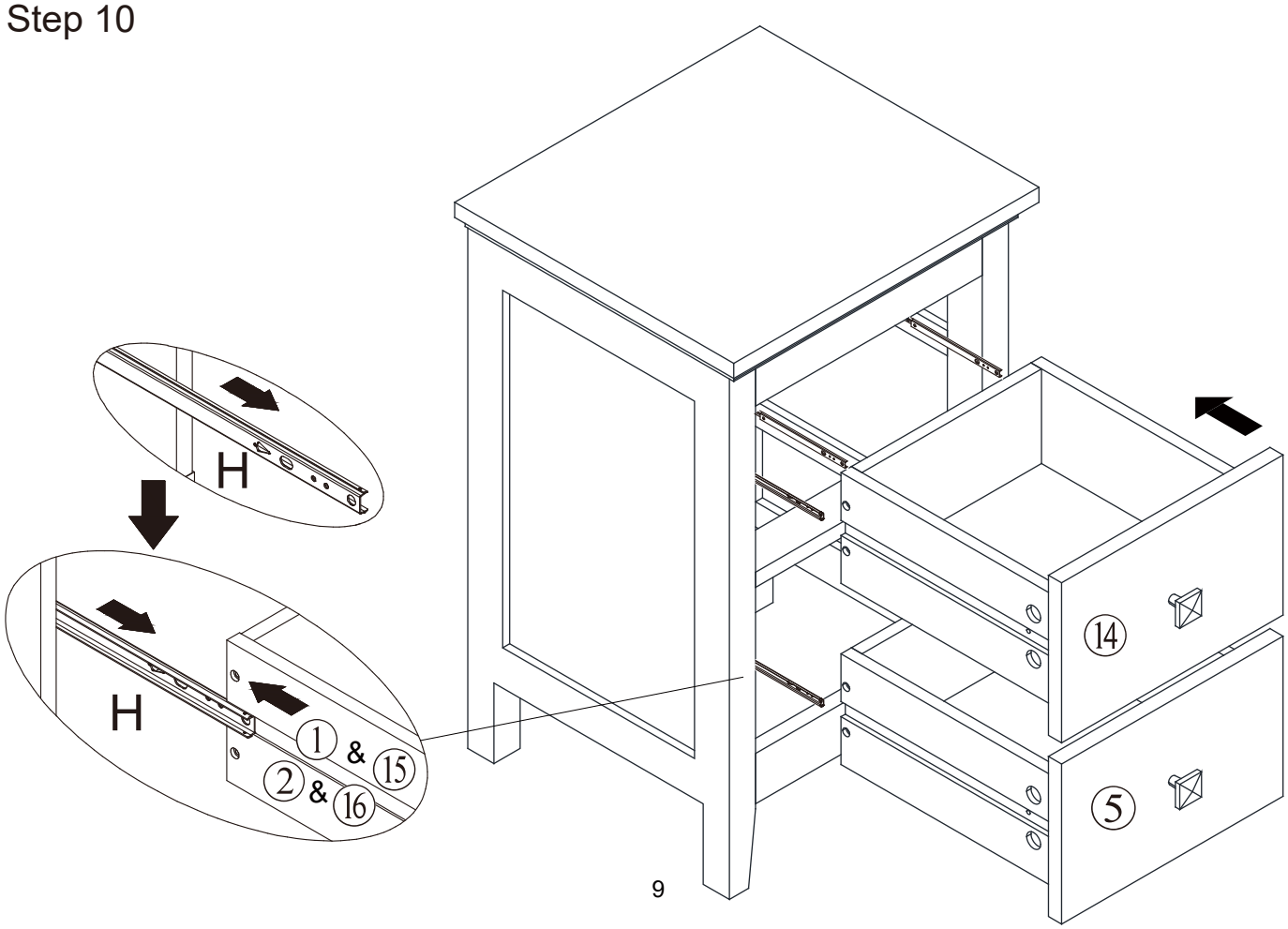

Step 11

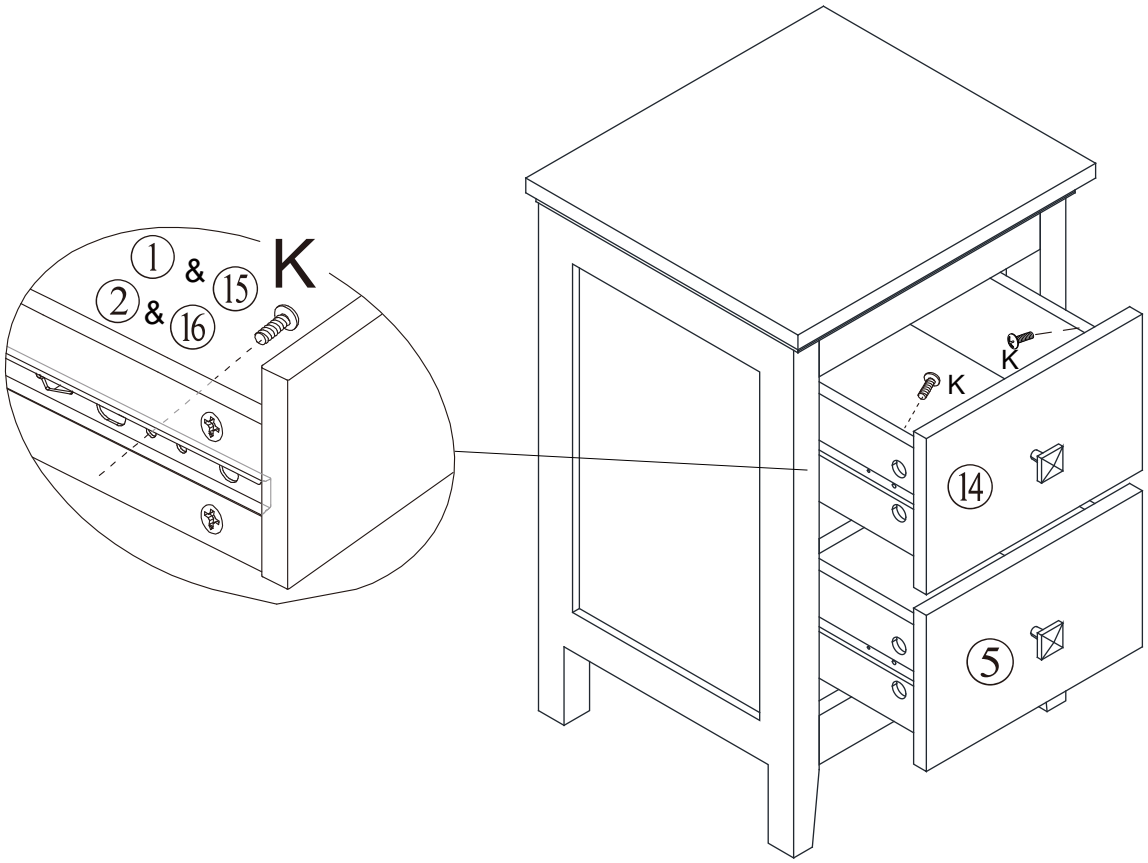

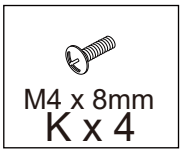
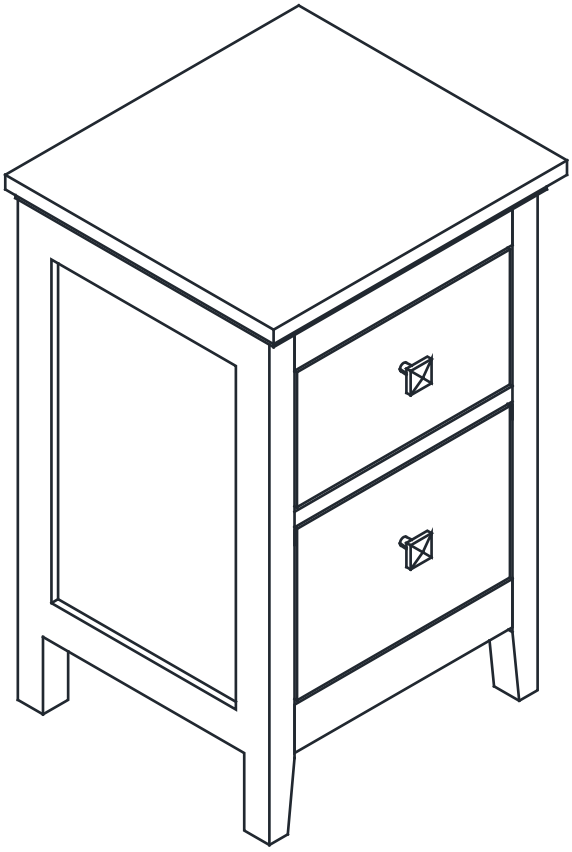
Step 12