①

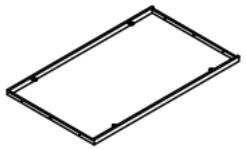

rectangular metal frame=2

②

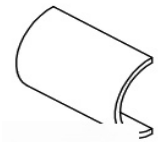

semicircular frame =2

③

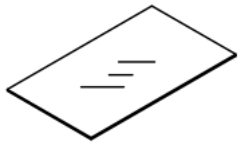

glass=2

Ⓐ

8*30 hexagon flat head screw=12
shim =12

Ⓑ

wrench=1

Ⓒ

rubber pad=8

1

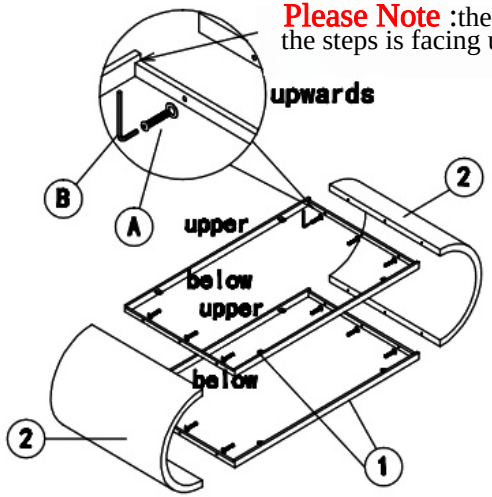

1: flat head screws through the rectangular metal frame to lock the semi-circular frame

2

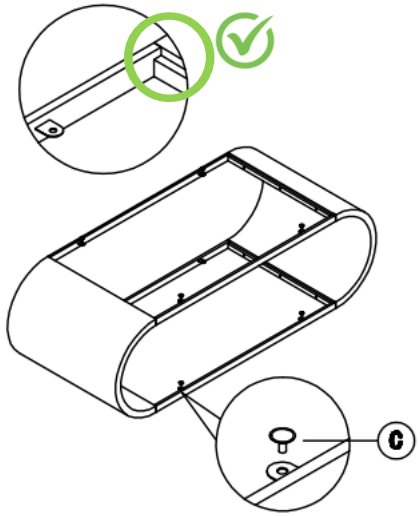

2:Put the rubber pad in the ear of the hardware frame

3

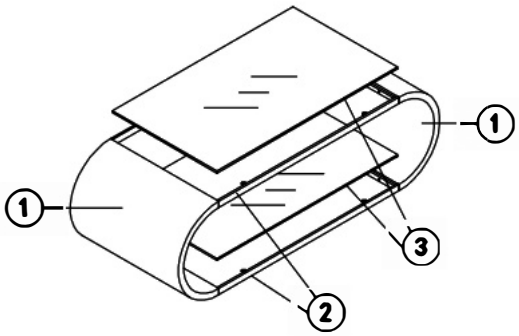

3:The glass is gently placed in the hardware frame
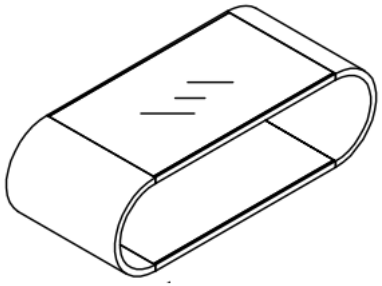
4