⚠ Please note: Items cannot be returned once assembled.

Installation & Assembly

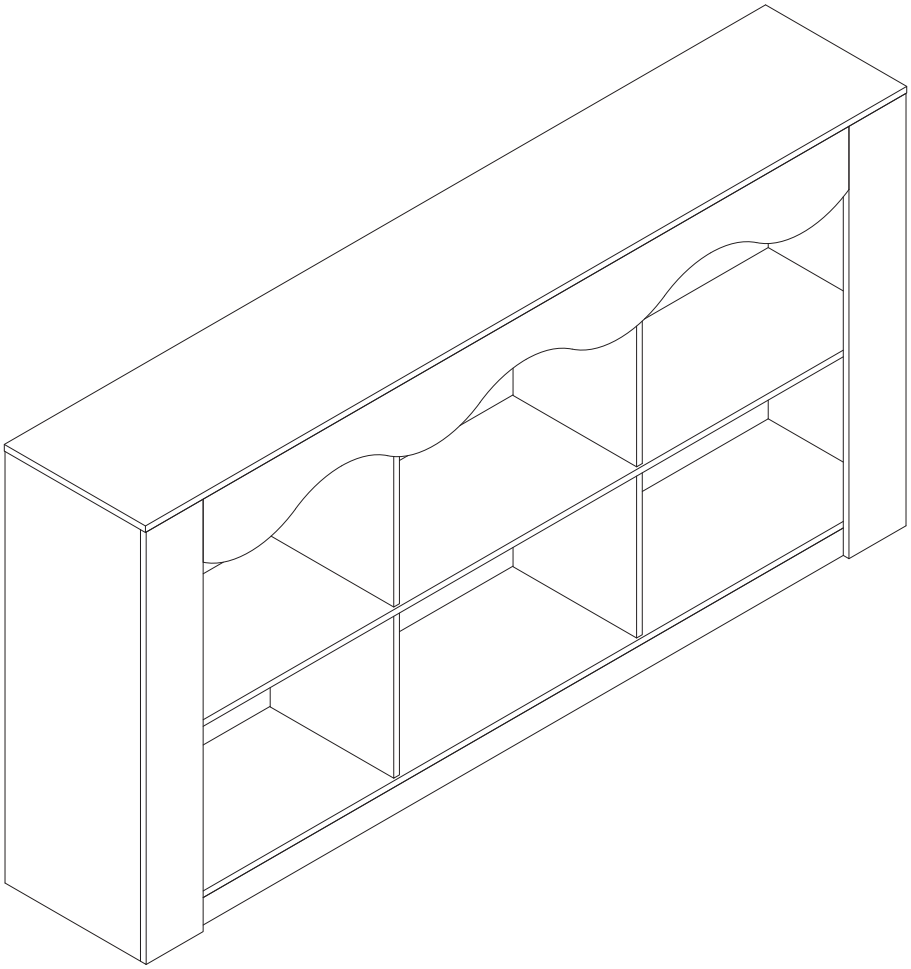

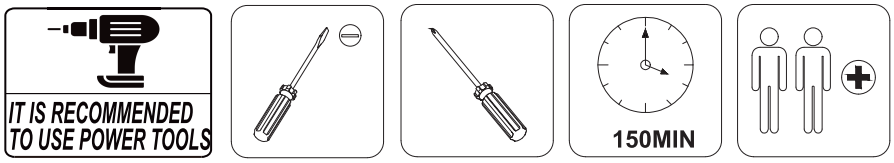

***EN*_IMPORTANT, RETAIN FOR FUTURE REFERENCE: READ CAREFULLY.**

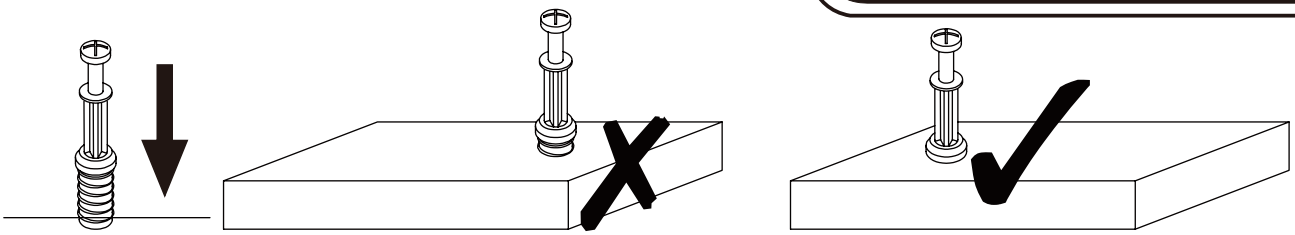

EN_QUICKFIT: Tighten quickfit until shoulder is flush with panel.Do not overtighten or undertighten.

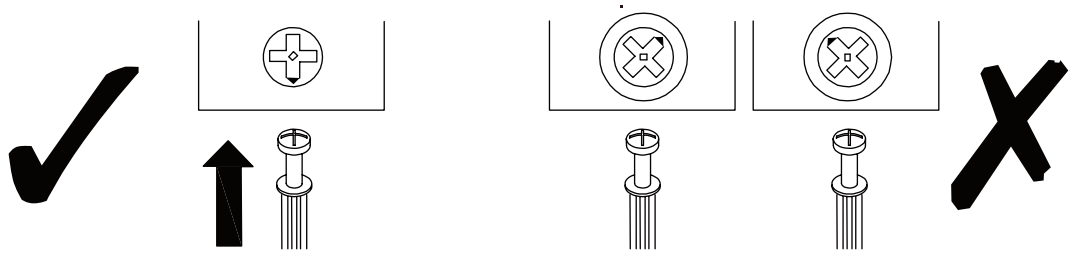

EN_CAM LOCK: When fitting cam lock, ensure starting position is correct before you insert connecting quickfit.

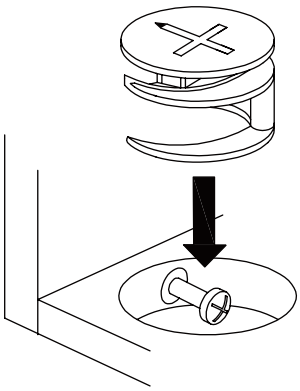

EN_ Quickfit head should be in the centre of the cam lock when the two panels are joined.
Cam lock should be inserted before quickfit.

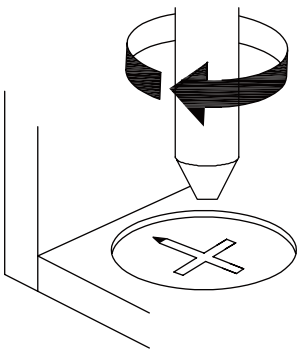

EN_ Turn cam lock clockwise to tighten.

NO.	PARTS	QTY	SPARE
①	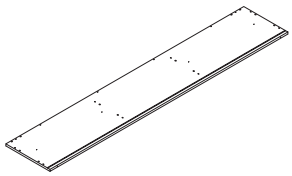	x1	
②	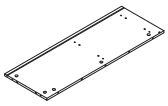	x1	
③	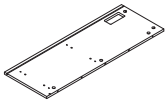	x1	
④	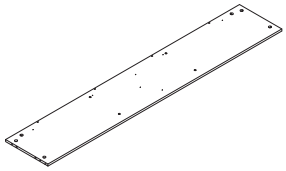	x1	
⑤	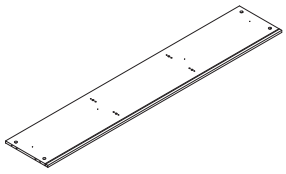	x1	
⑥	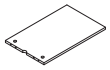	x2	
⑦		x2	
⑧		x1	
⑨	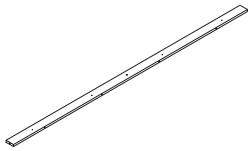	x1	
⑩	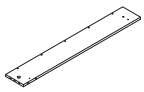	x1	

NO.	PARTS	QTY	SPARE
⑪	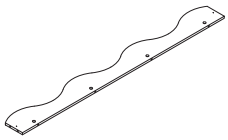	x1	
⑫	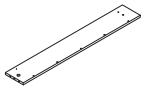	x1	
⑬	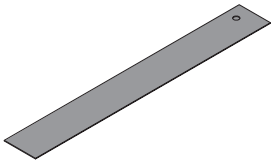	x1	
⑭		x1	
⑮	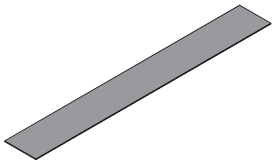	x1	
⑯	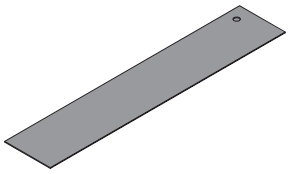	x1	
	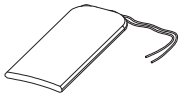 Hardware Kit		

HARDWARE

A x34 Ø6x35mm +2(spare) 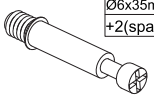	**B** x34 Ø15x10mm +2(spare) 	**C** x49 Ø6x30mm +2(spare) 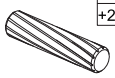	**D** x8 Ø4x35mm 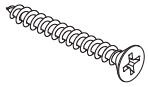	**E** x18 Ø3.5x11mm +2(spare) 	**F** x2  F-1 F-2
G x14 Ø3x16mm +1(spare) 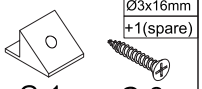 G-1 G-2	**H** x7 	**I** x2 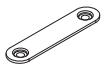	**J** x2 Ø4x14mm 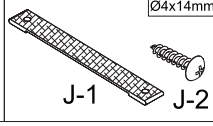 J-1 J-2	**K** x2 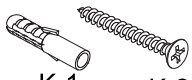 K-1 K-2	**L** x1 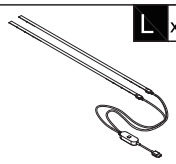
M x1 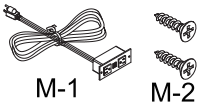 M-1 M-2	**N** x6  N-1 N-2				

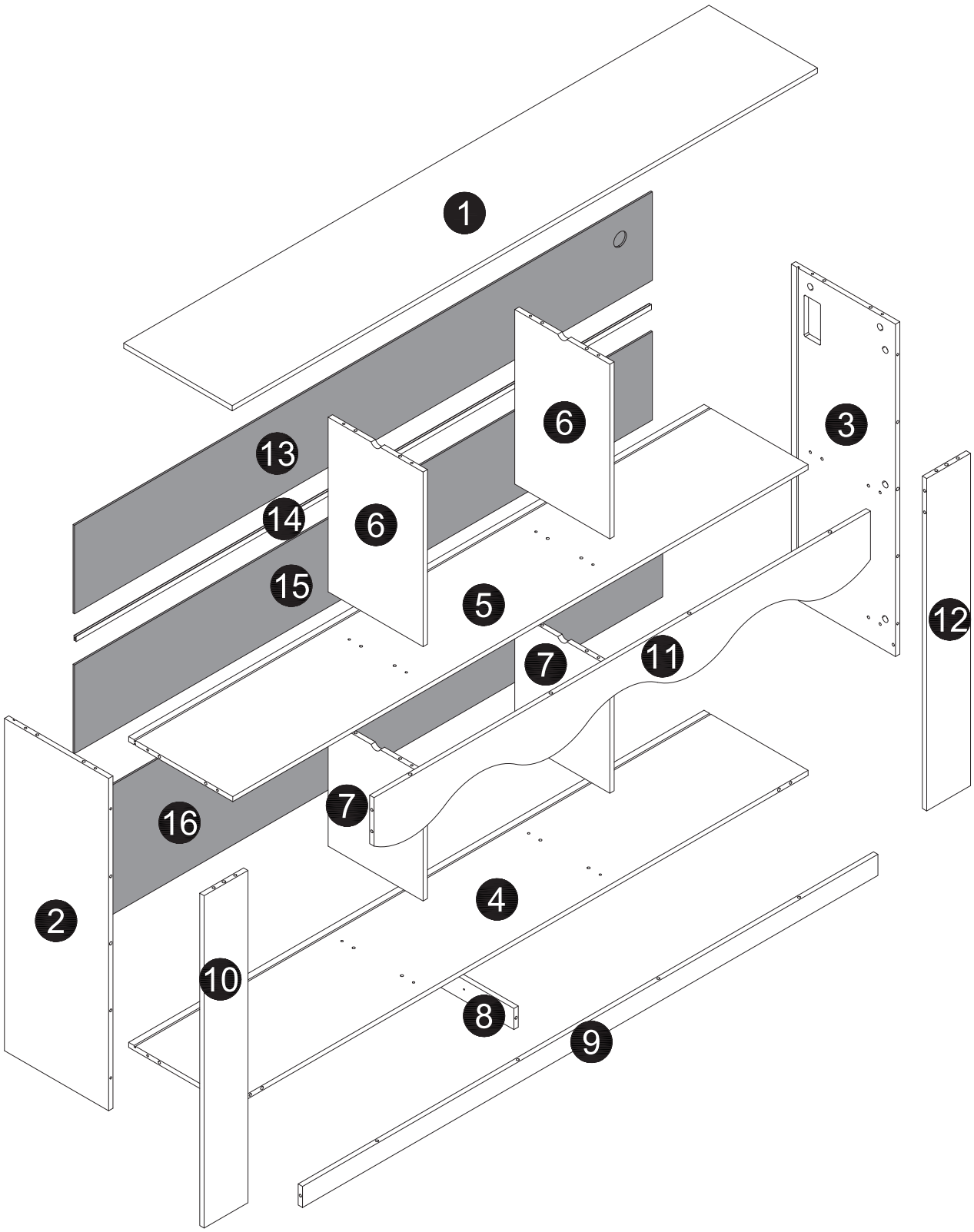
1
13
14
15
16
6
6
3
12
5
7
11
7
2
4
10
8
9

E x7



H x7



01

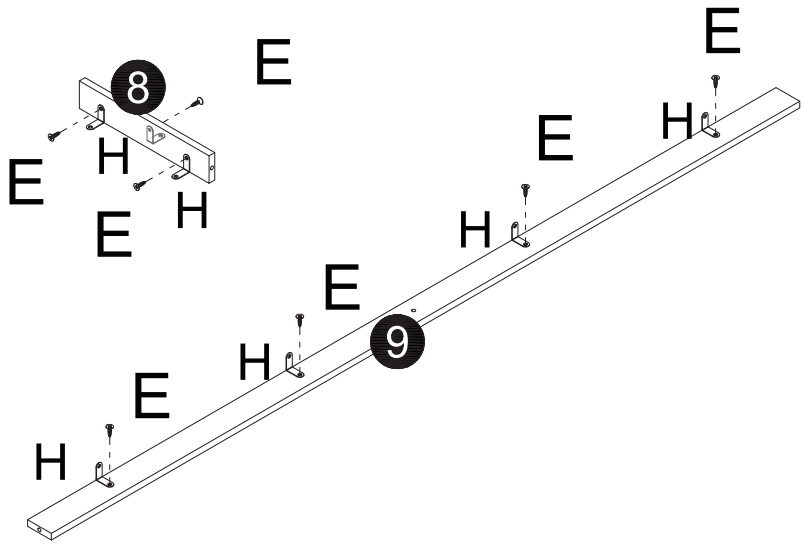

C x5

02

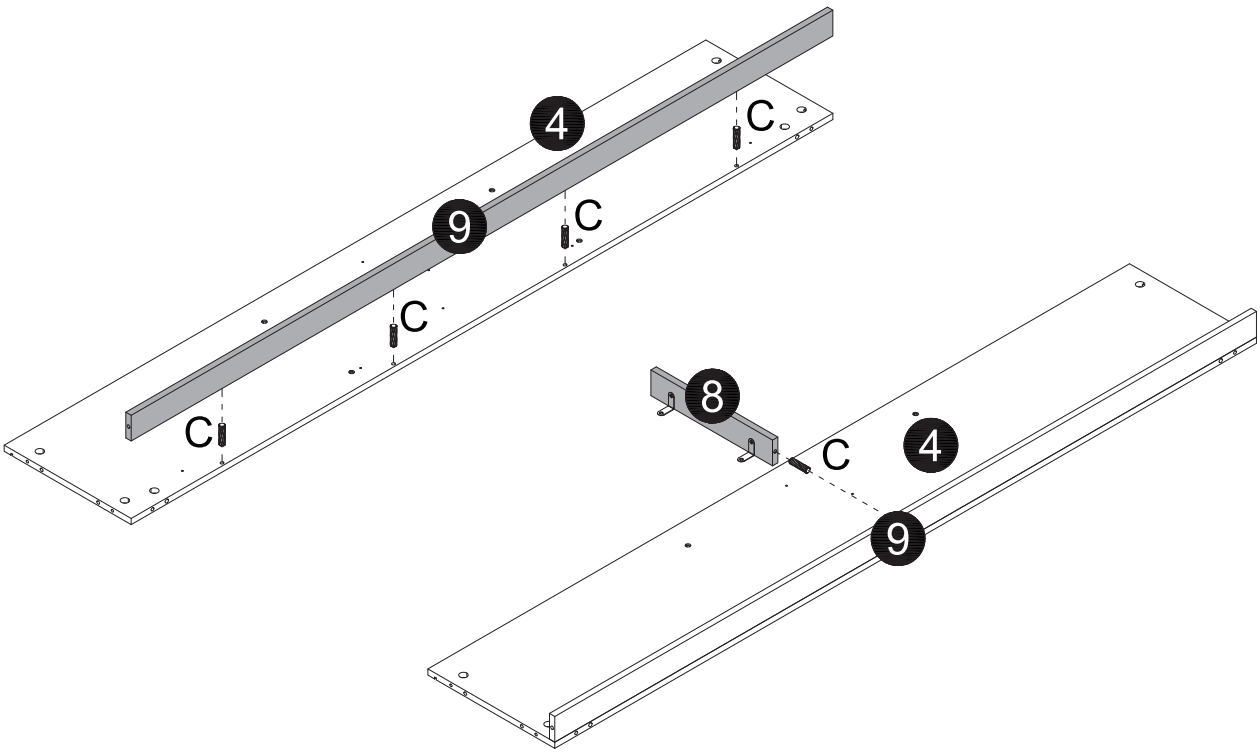

03

E x7

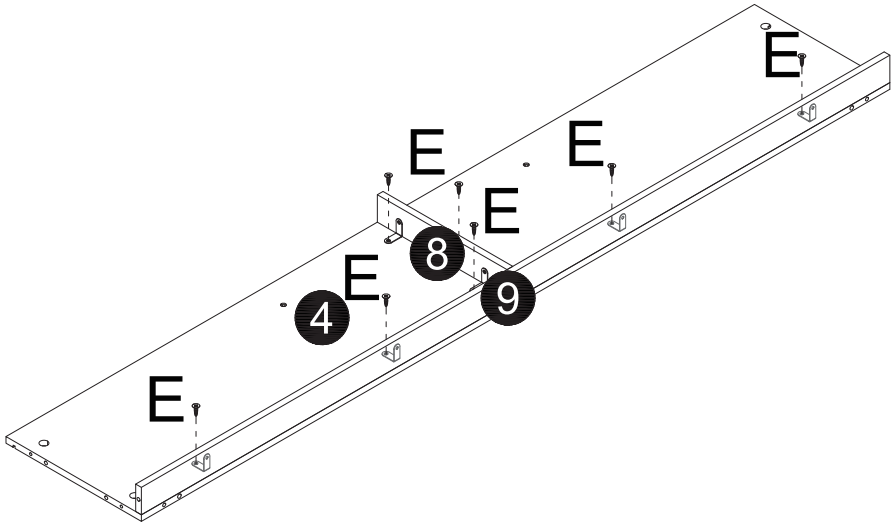

04

C x4

D x4

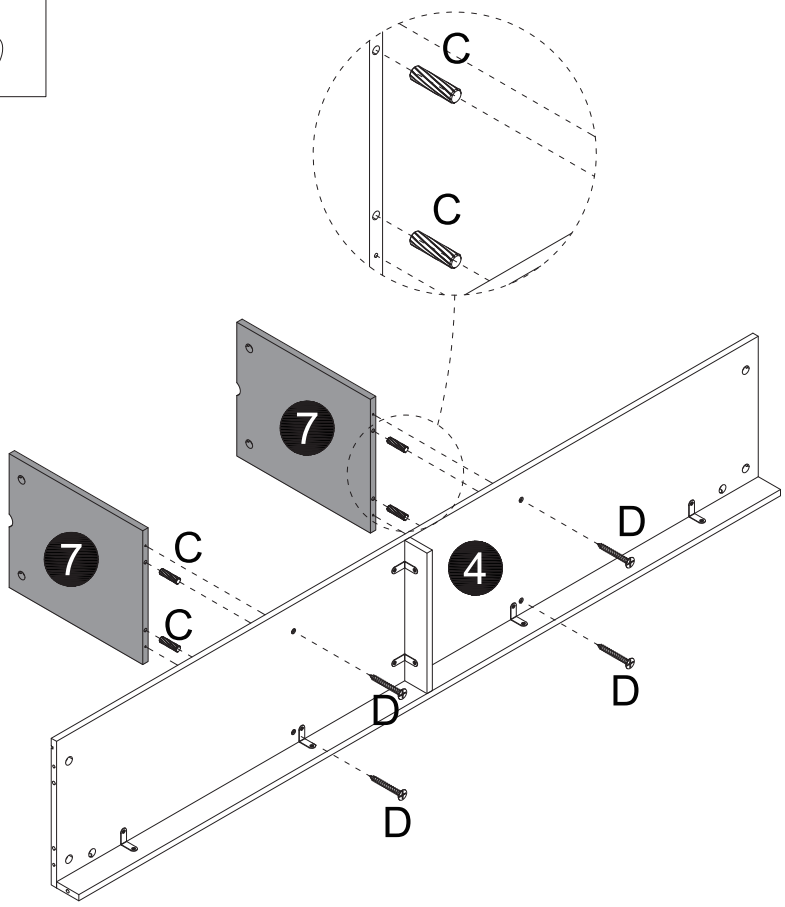

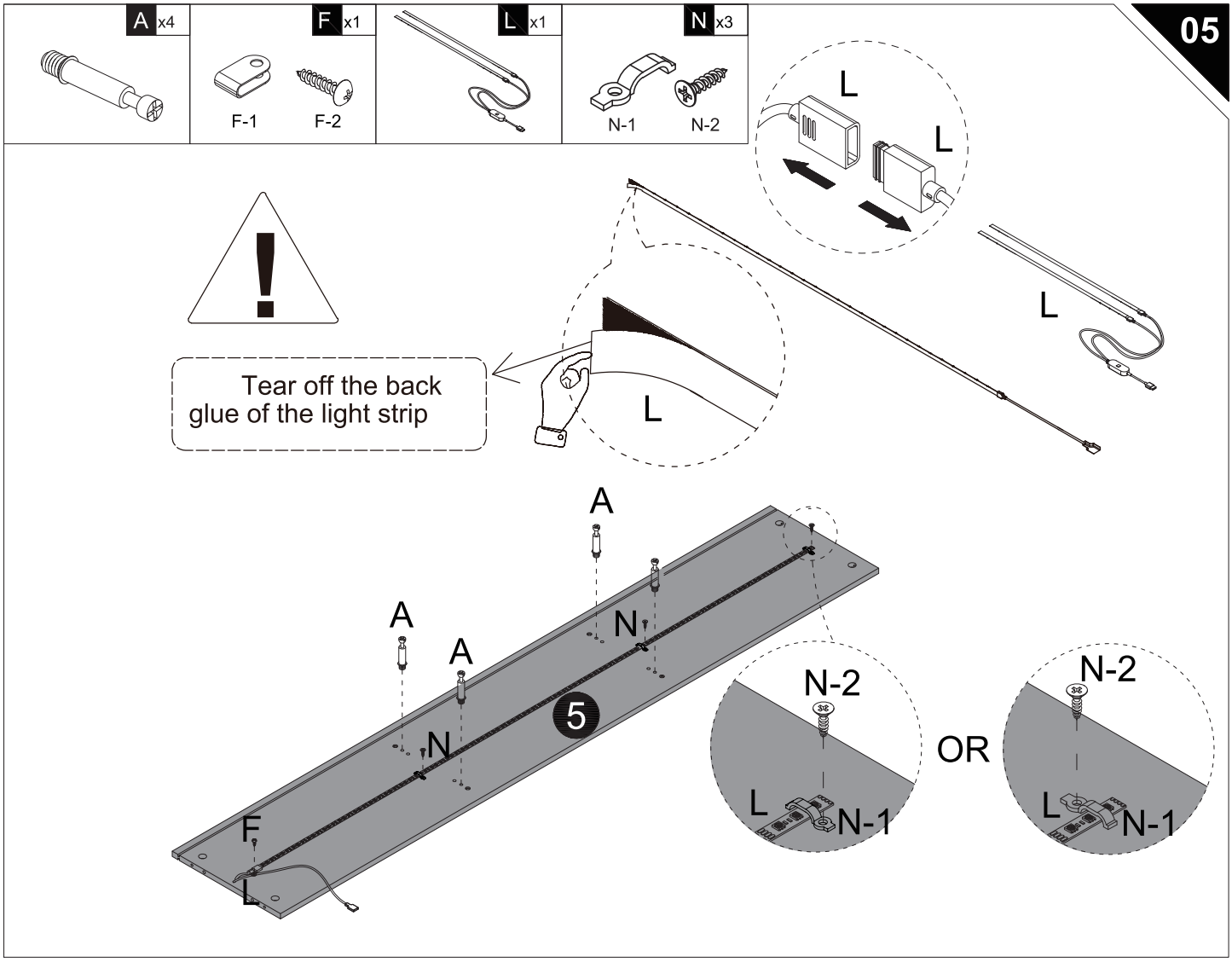
A x4
F x1
F-1
F-2
L x1
N x3
N-1
N-2
L
L
L
L
Tear off the back glue of the light strip
A
A
A
N
N
5
F
L
N-2
L
N-1
OR
N-2
L
N-1

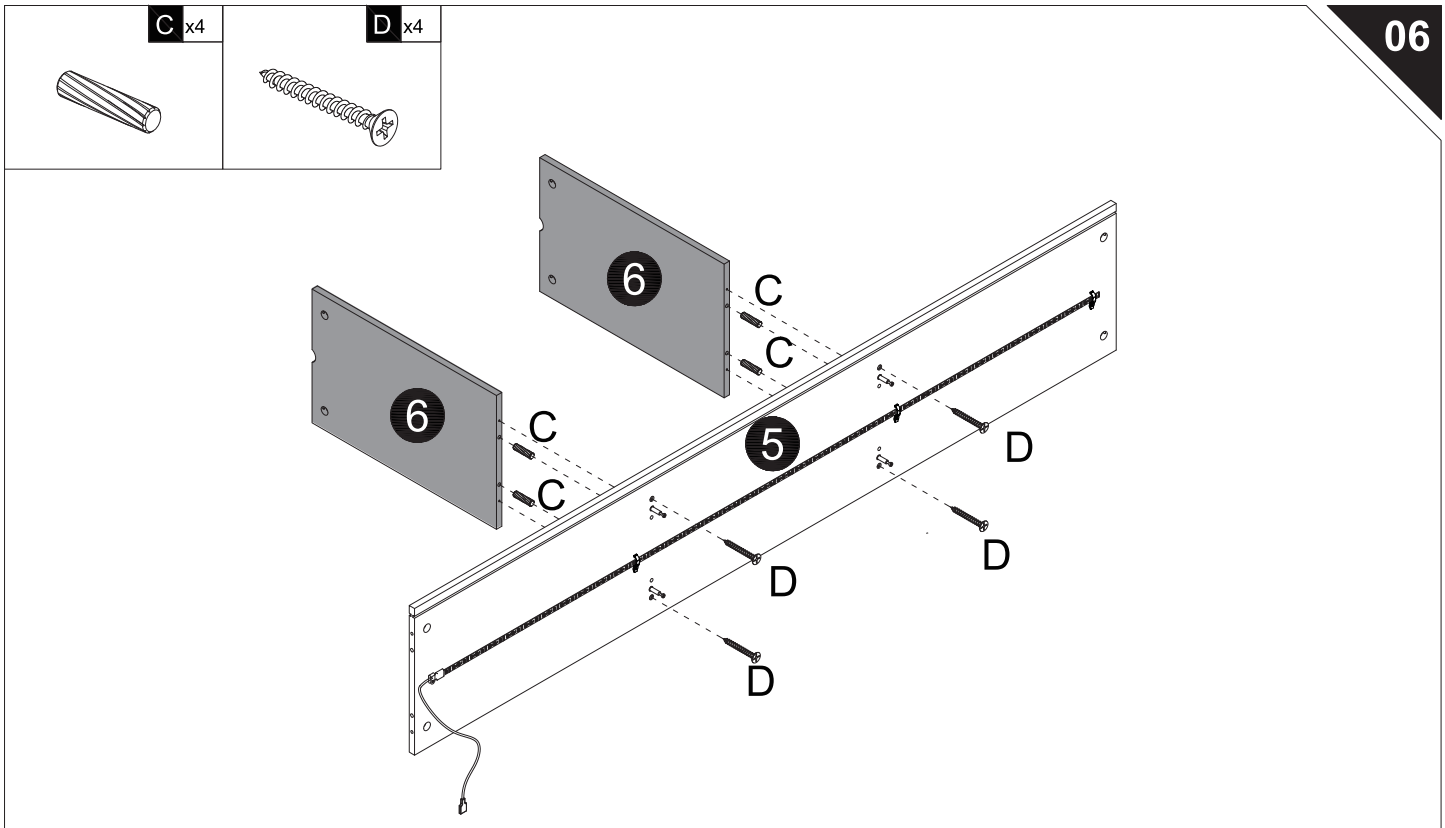
C x4
D x4
6
6
C
C
C
C
5
D
D
D
D

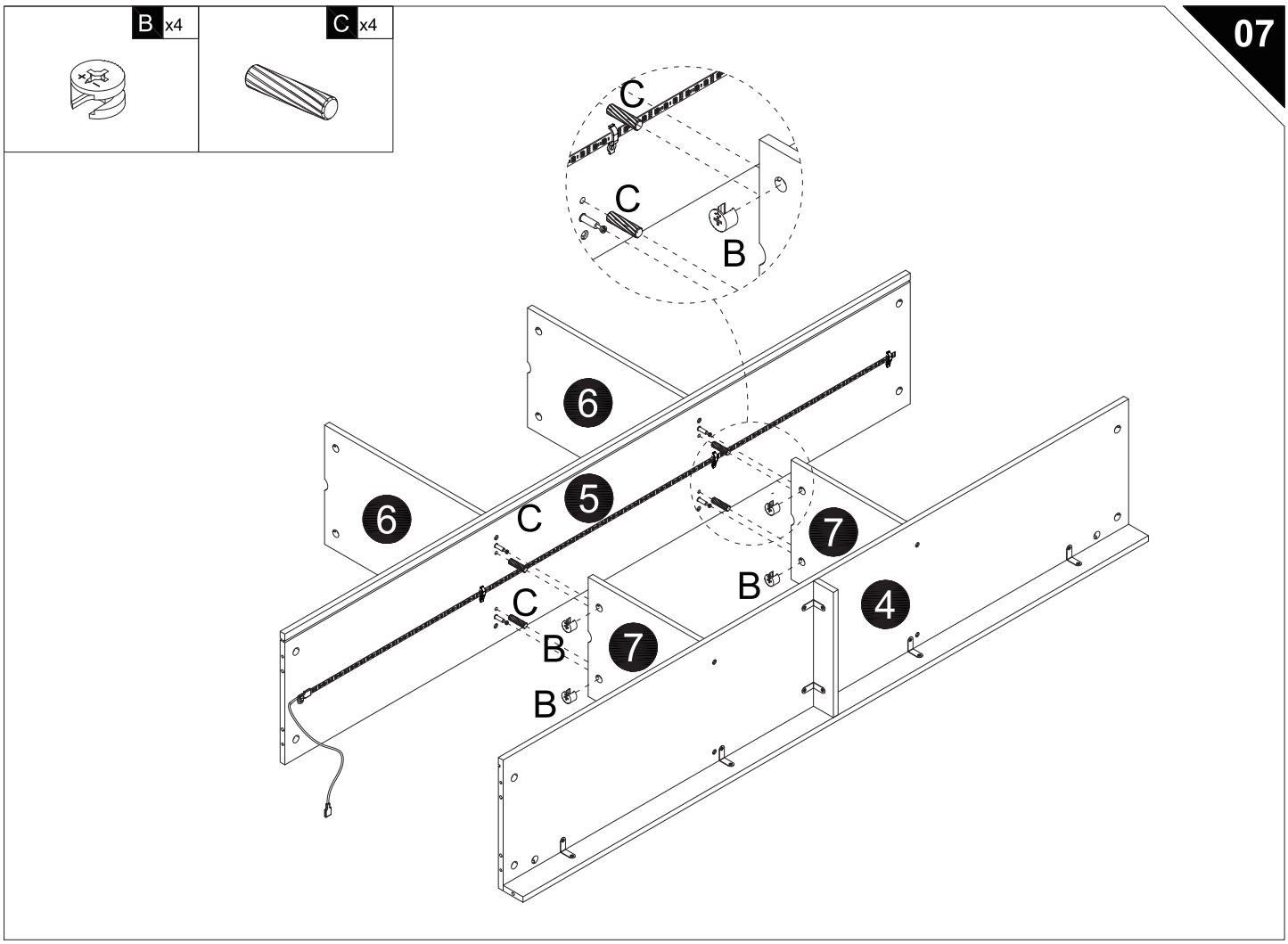
07
B x4
C x4
C
C
B
6
6
5
C
7
B
4
C
B
7
B

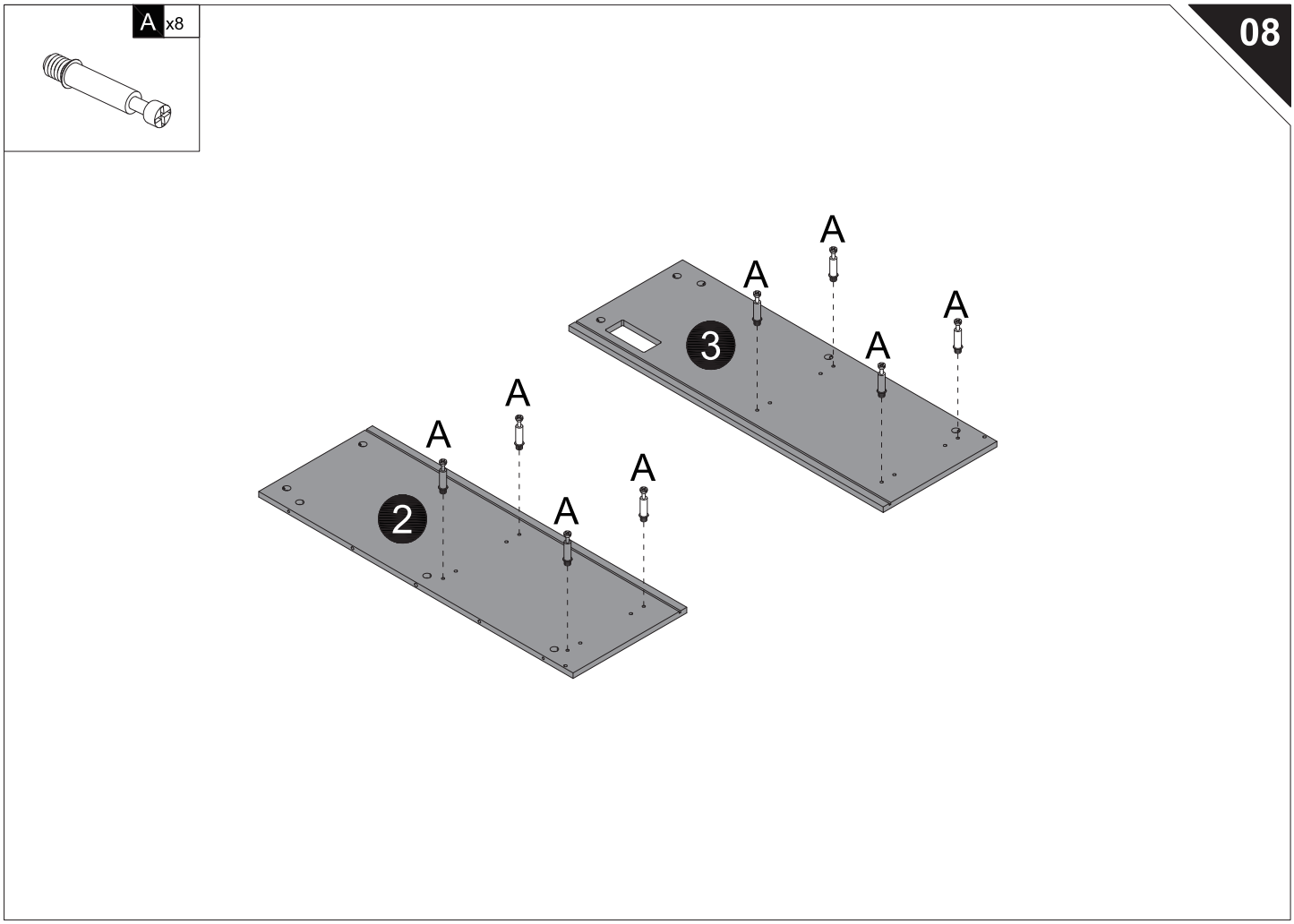
08
A x8
A
A
A
A
3
A
A
A
A
2

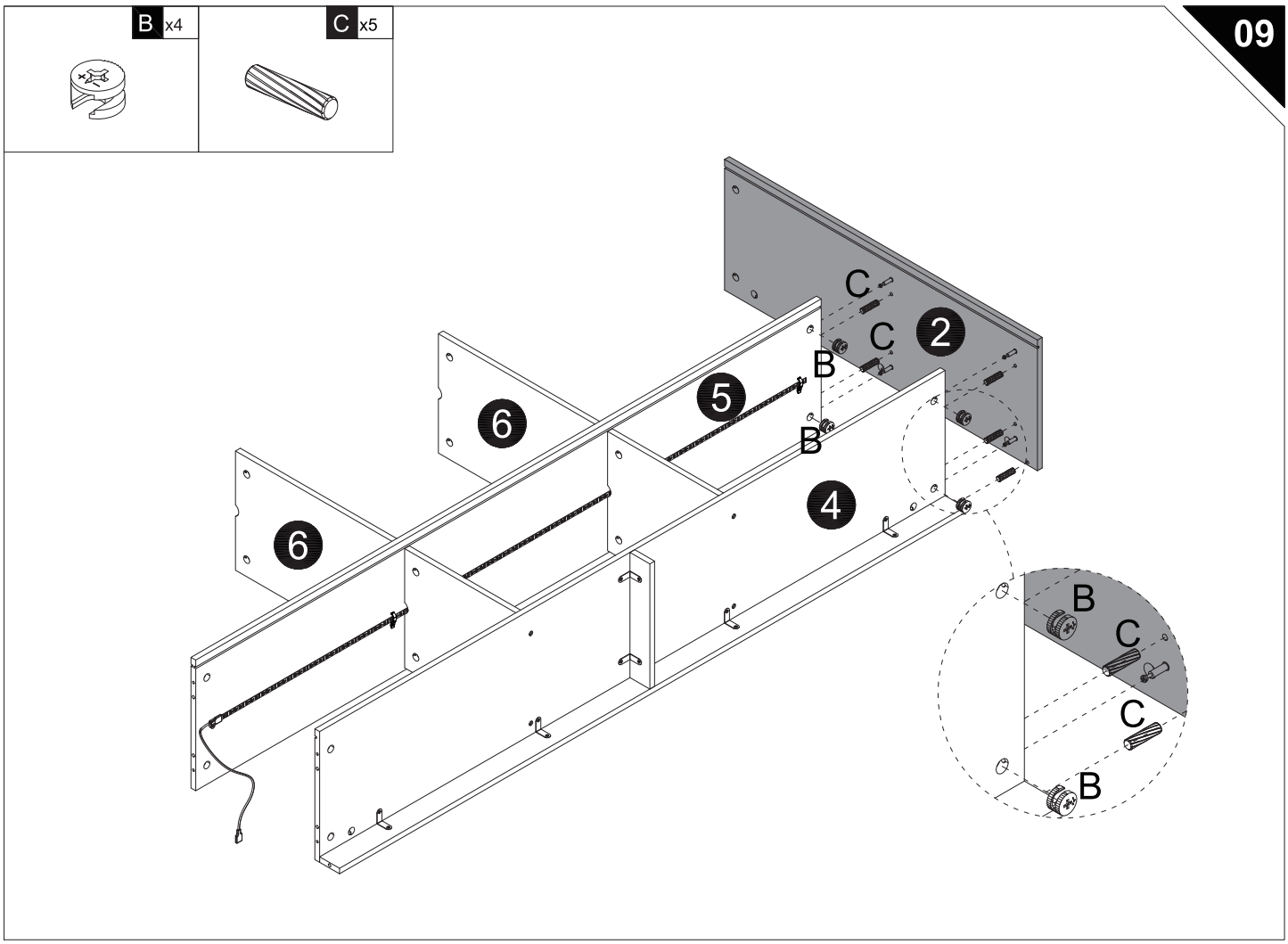
09
B x4
C x5
C
C
2
B
5
6
B
4
6
B
C
C
B

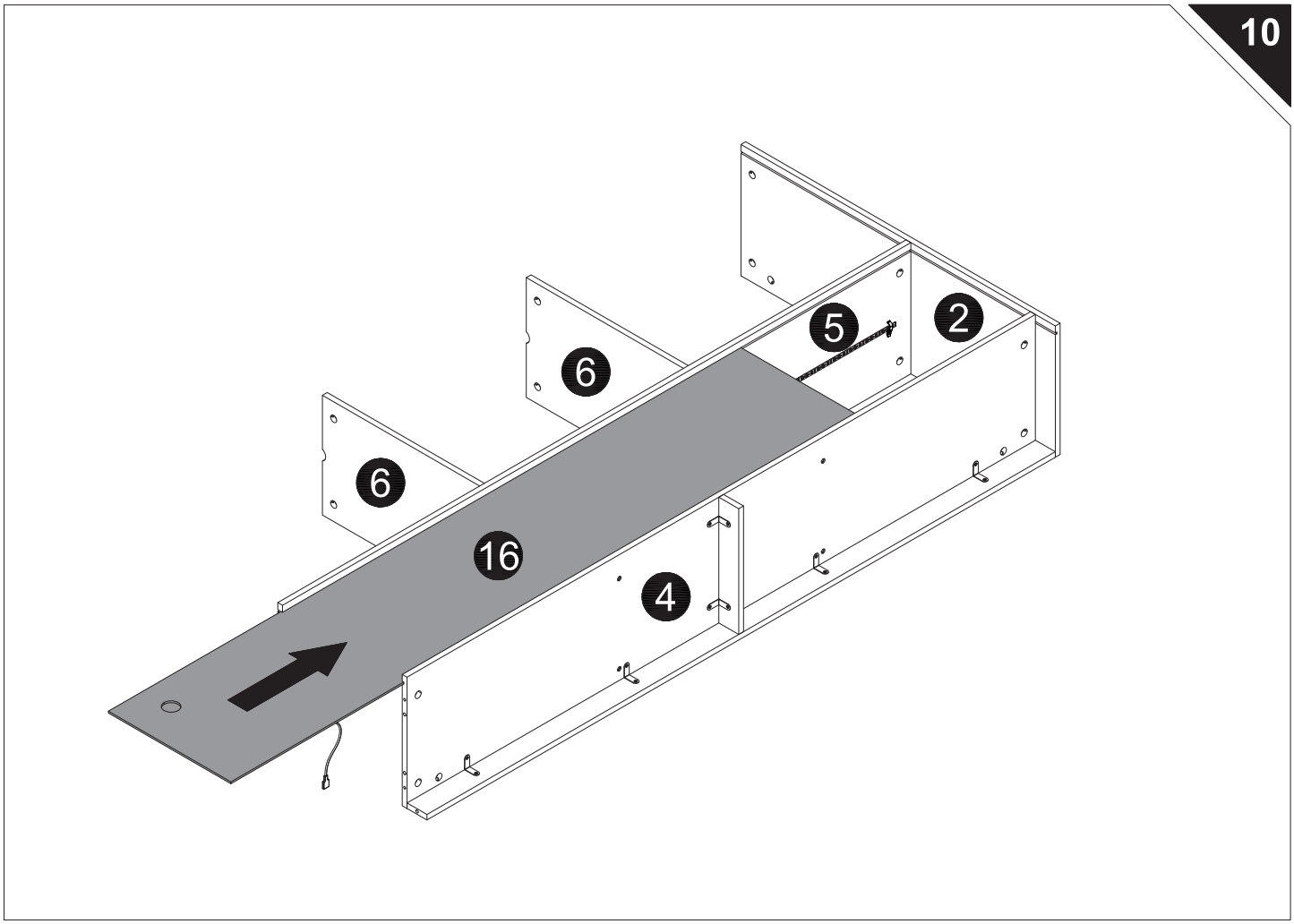
10
5
2
6
6
16
4

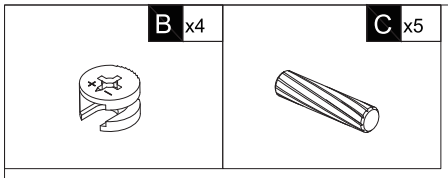
B x4
C x5

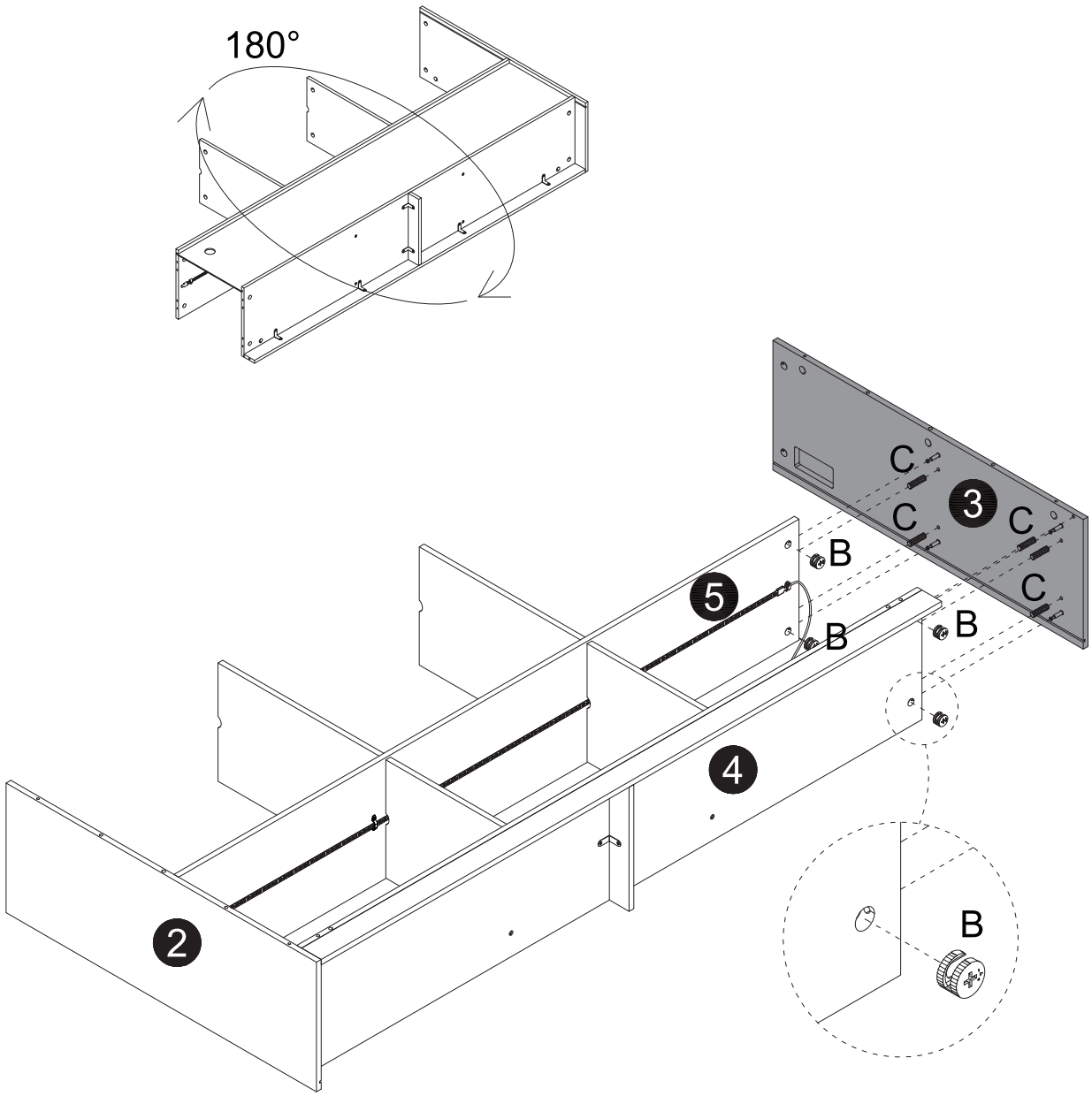
180°
C
C
3
C
C
B
5
B
B
4
2
B

A x8	C x4	E x4	I x2
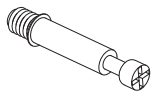	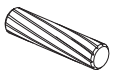		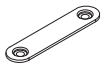

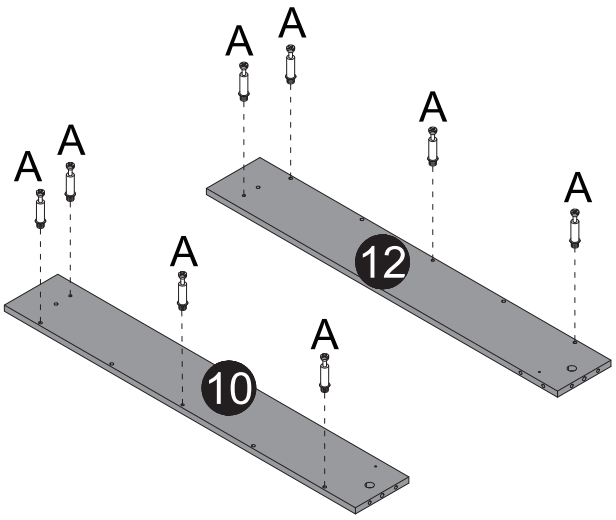

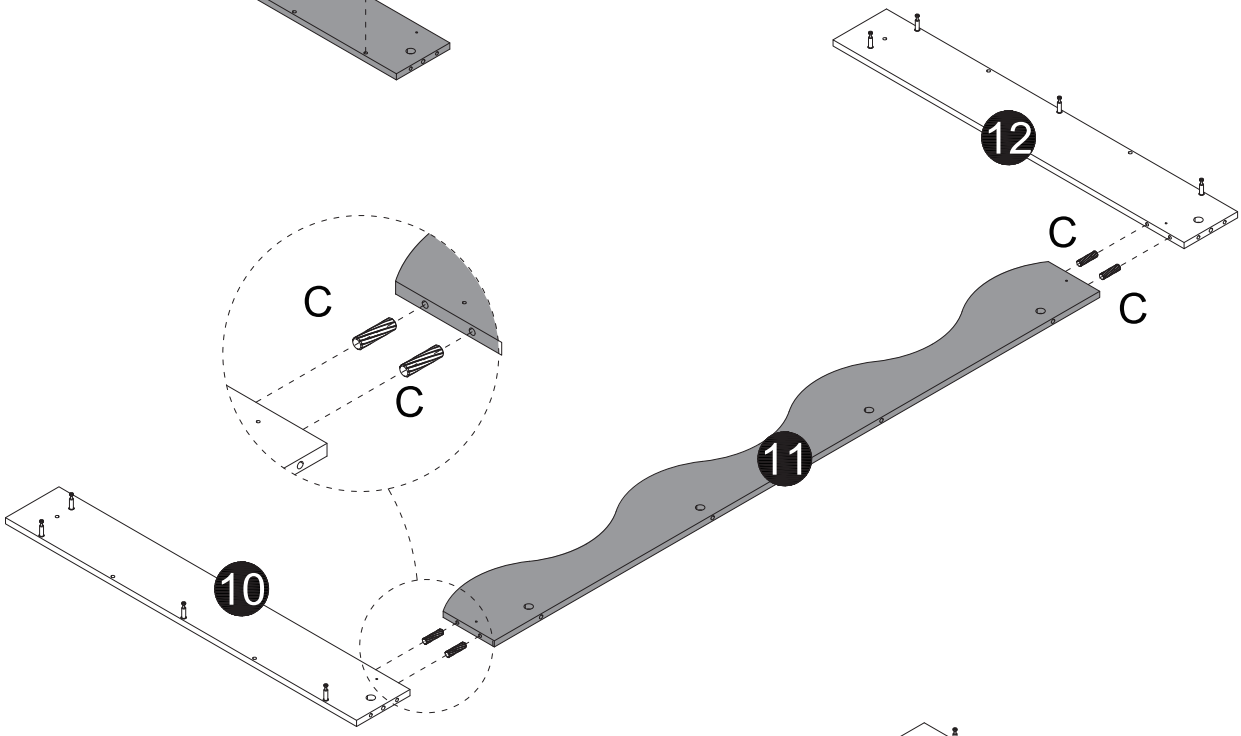

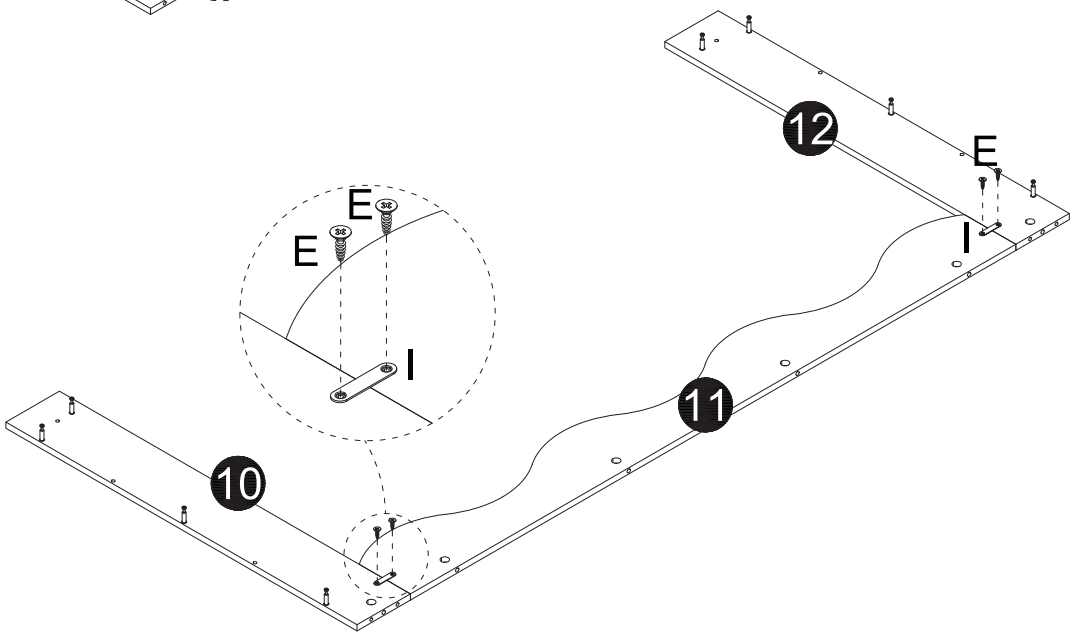

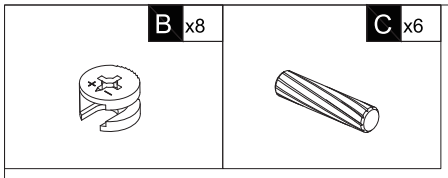
B x8
C x6

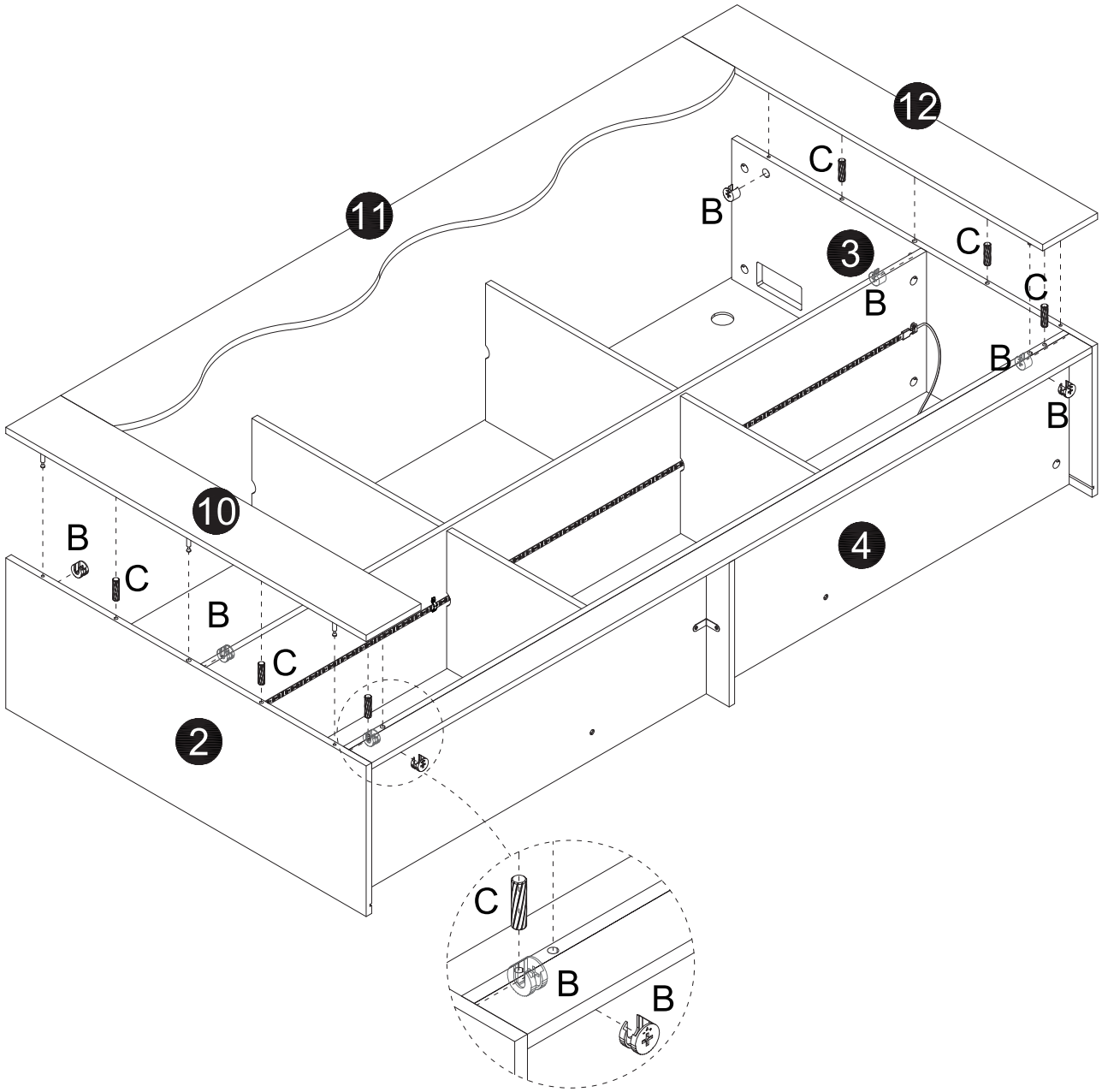
12
11
3
10
4
2
B
C

14

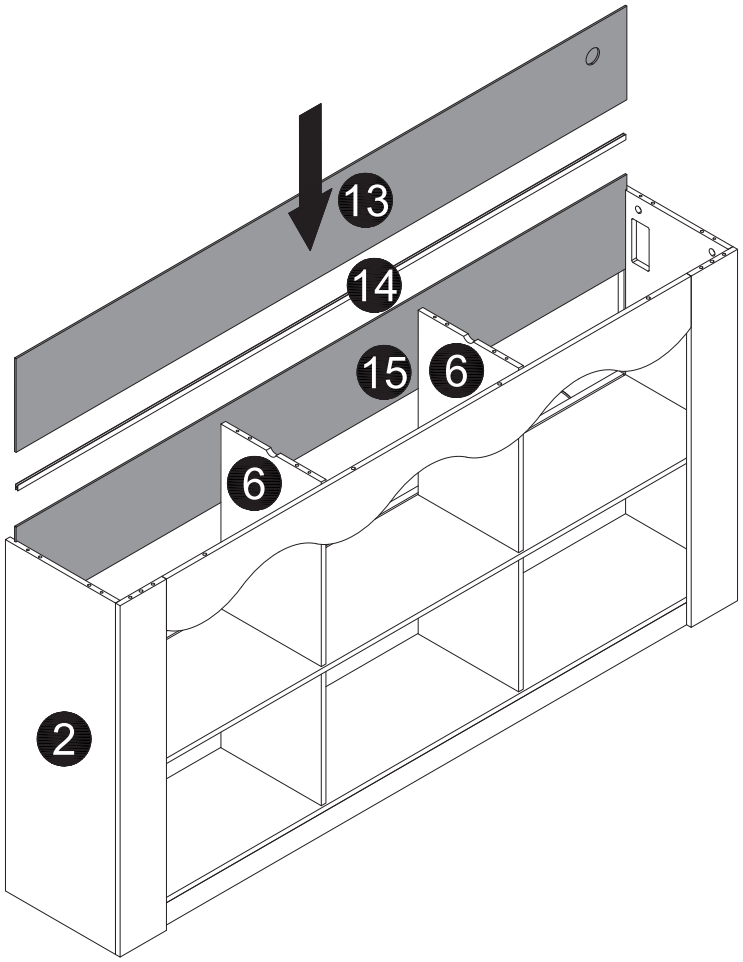
13
14
15
6
6
2

15

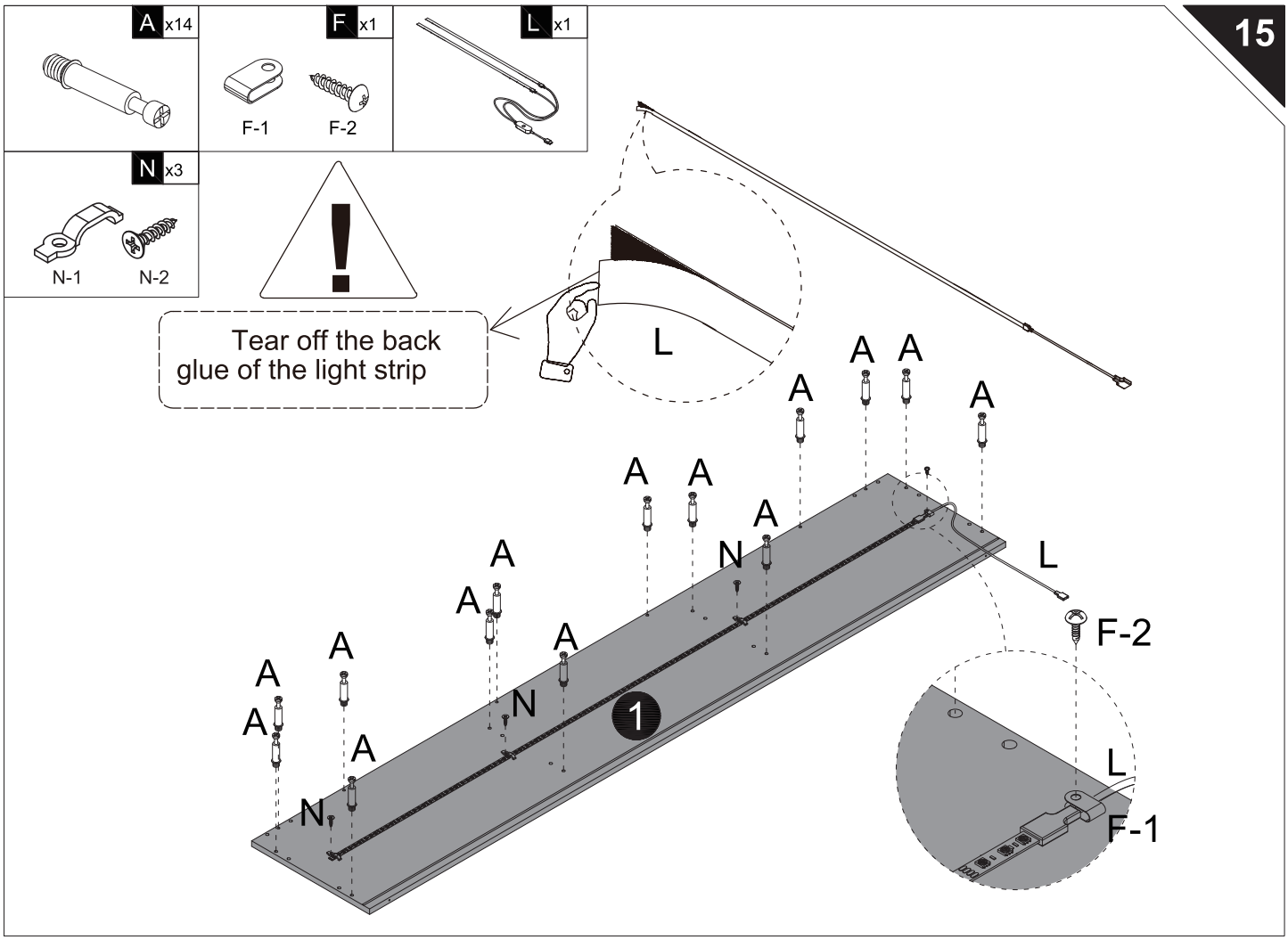
A x14
F x1
L x1
F-1
F-2
N x3
N-1
N-2
Tear off the back glue of the light strip
L
A
N
1
F-2
L
F-1

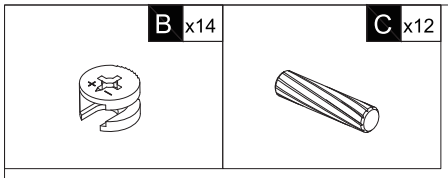
B x14
C x12

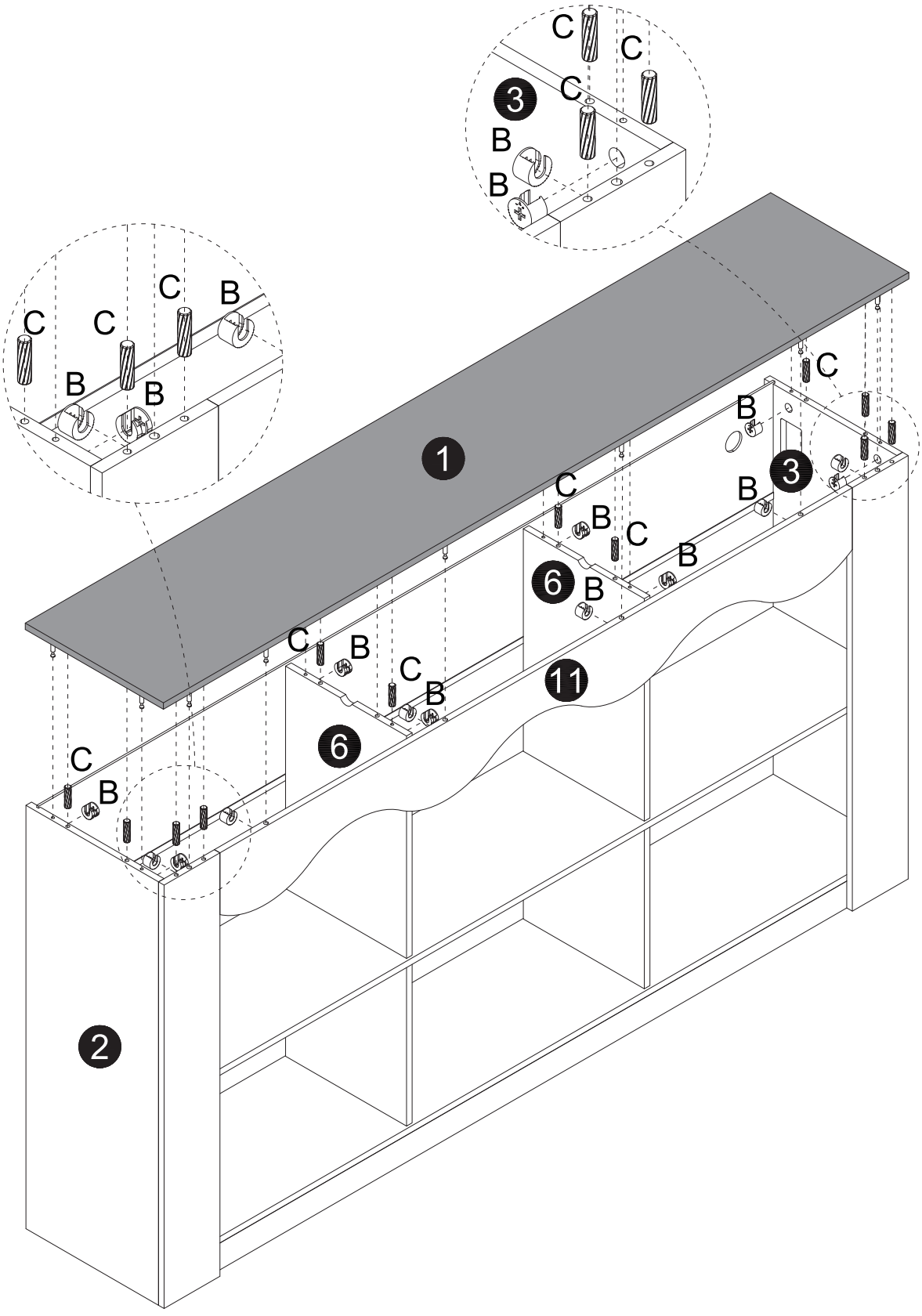
C
C
C
3
B
B
C
C
C
B
B
B
1
C
B
3
B
C
B
C
B
6
B
C
B
C
B
11
6
C
B
2

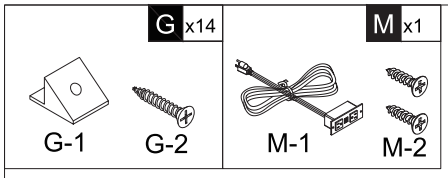
G x14
M x1
G-1
G-2
M-1
M-2

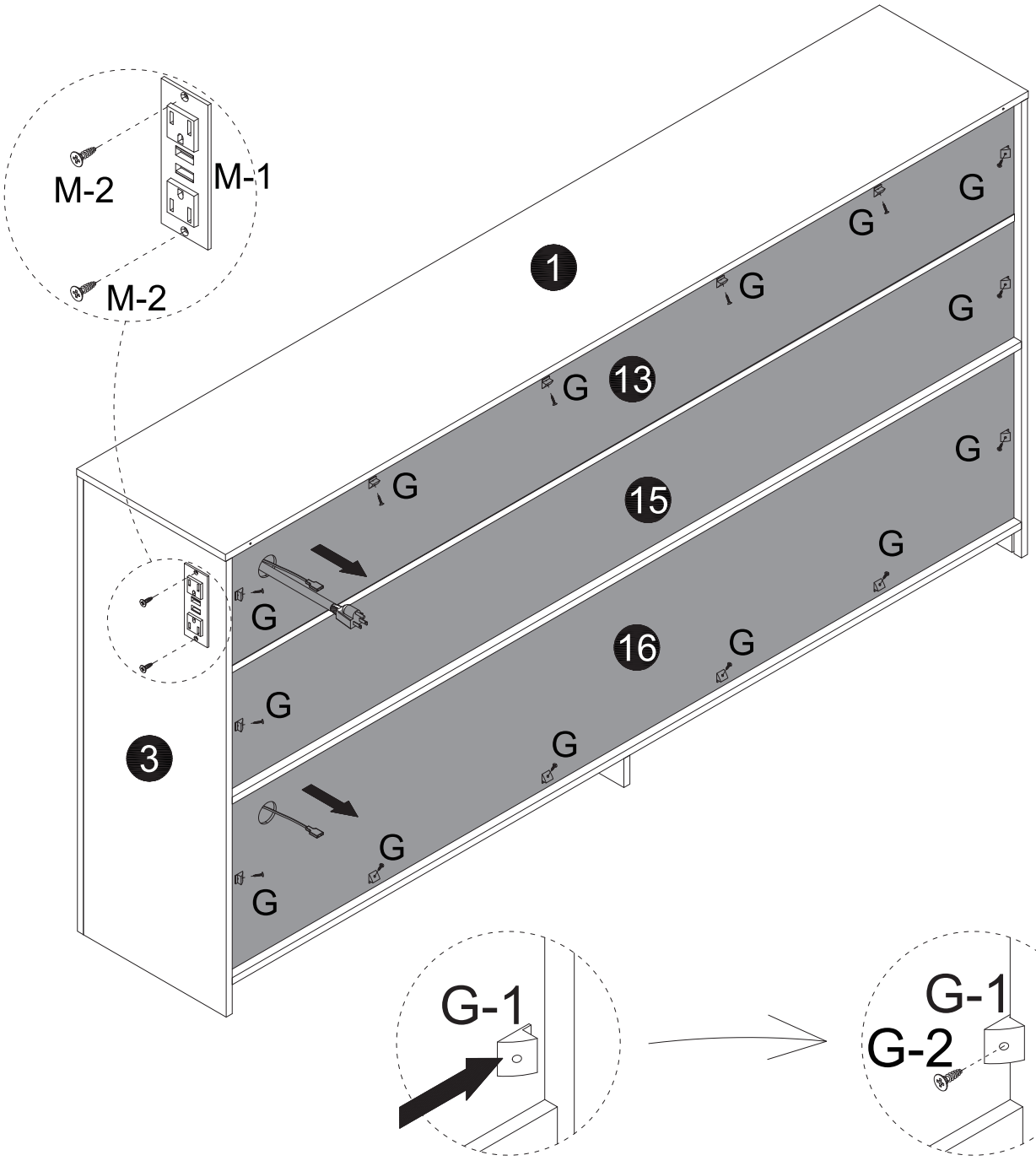
M-2
M-1
M-2
1
13
15
16
3
G
G-1
G-2

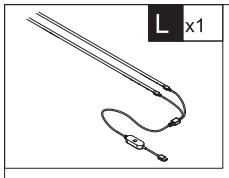
L
x1

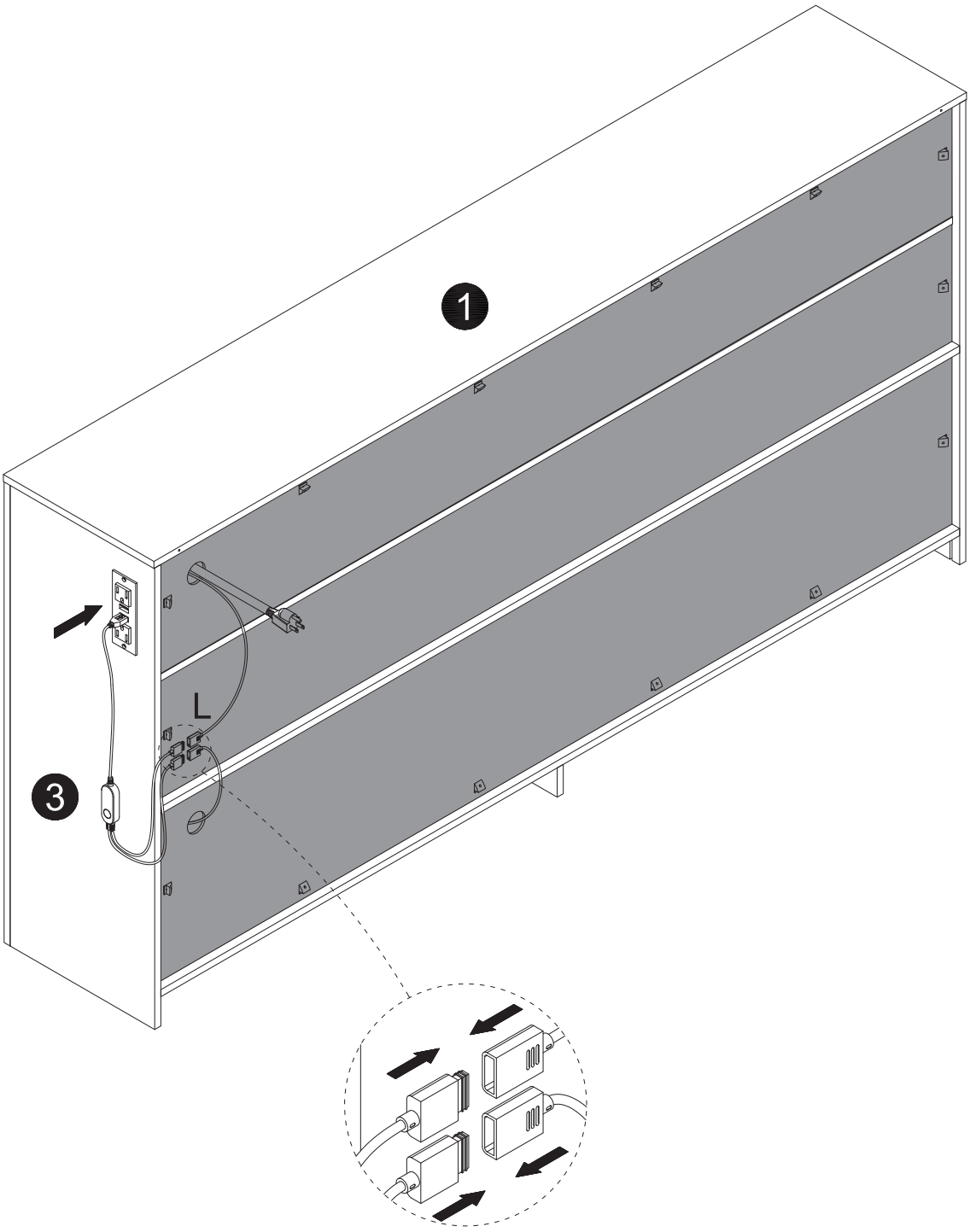
1
L
3

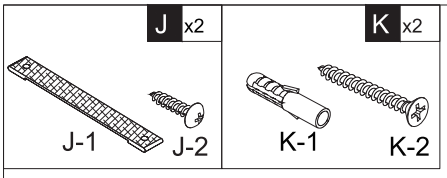

Done

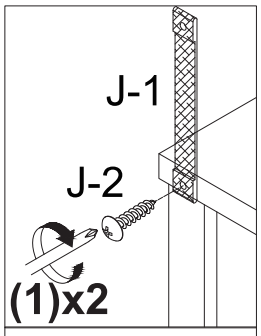

First fix the anti-rewind screw in the reserved hole of the product.

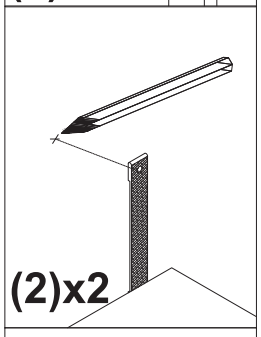

then, use a ruler to measure the approximate height of the product on the wall, and then mark it witha pen.

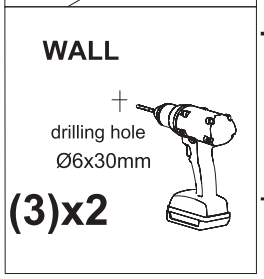

Then use a tape drill to make holes in the wall that are suitable for the product screws.

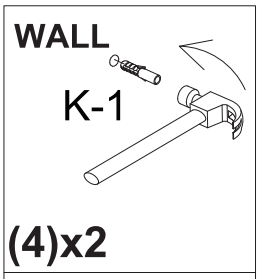

Then,put the expansion bolt into the hole

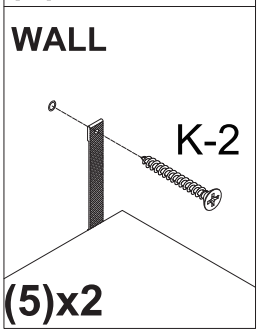

Finally,pass the matching screws throughthe "anti-rewind" and tighten themto fix them on the wall.

