WARNING (To reduce the risk of fire, electric shock, or personal injury):

1. We suggest installation by a **licensed electrician**.
2. Please read the instruction carefully and save it as you may need it at a later time.
3. Before you start, **NEVER** attempt any work without shutting off the electricity until the work is done.
   - » Go to the main fuse, or circuit breaker, box in your home. Place the main power switch in the "**OFF**" position.
   - » Place the wall switch in the "**OFF**" position.
1. Mounting surface should be clean, dry, flat, strong enough and 1/4" larger than the canopy on all sides. Any gaps between the mounting surface and canopy exceeding 3/16" should be corrected as required.
2. Make sure that the ceiling or wall can stand the weight of the lamp before installation.
3. Make sure the voltage you are using is **120V**. The maximum wattage is **Type A, Max 60W** per bulb.
4. Keep the lamp away from acidic and alkaline substances in case of damaging the surface of the lamp.
5. When replacing bulbs, you should turn off or unplug the lamp and you must wait until it is cool as bulbs get hot quickly.
6. The safety instructions appearing in this manual are not meant to cover all possible conditions that may occur. It must be understood that common sense, caution and care must be used with any electrical products.

IMAGE FOR FINISHED PRODUCT:

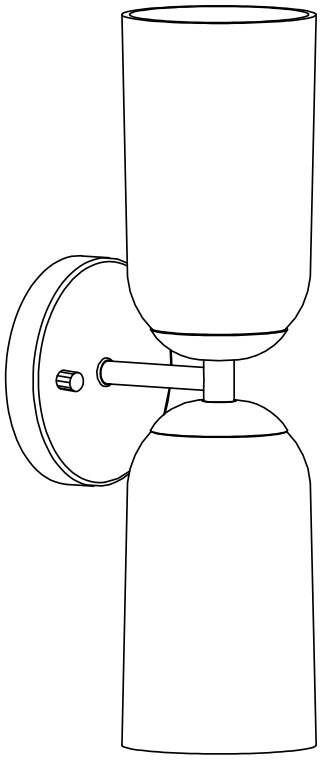

TOOLS REQUIRED (NOT INCLUDED):

Before starting assembly and installation please prepare the needed tools as below picture

	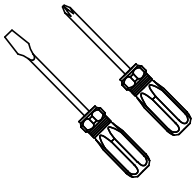	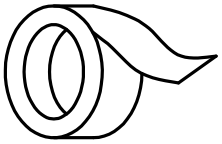	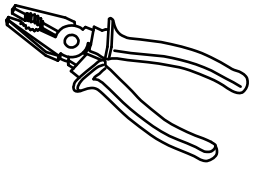	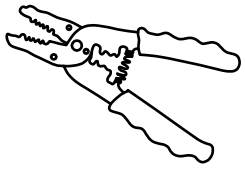
Ladder	Philips Head or Flat Blade Screwdriver	Electrical Tape	Pliers	Wire Cutter/Stripper

PARTS INCLUDED:

(C) Mounting plate (1)
(D) Green ground screw (1)
(E) Back plate (1)
(F) Knob nut (2)
(G) Socket (2)
(H) Lampshade (2)
(I) Socket ring (2)

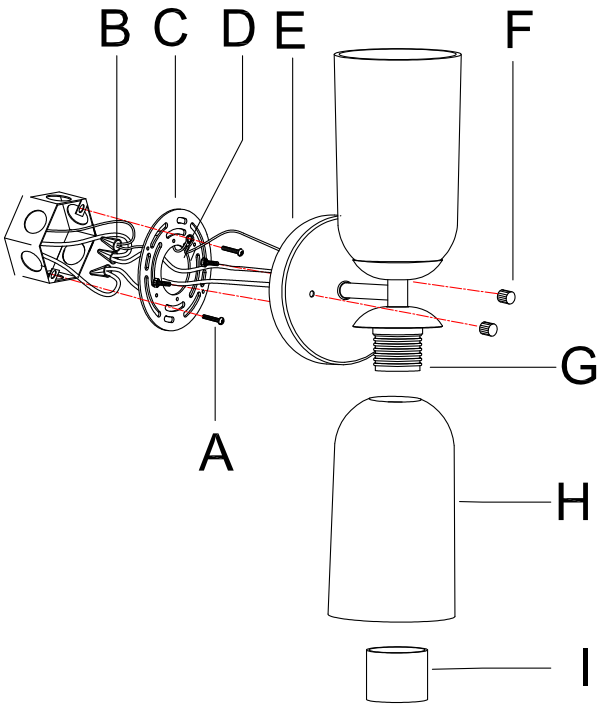

ACCESSORIES ENCLOSED:

(A) Mounting screw (2)
(B) Plastic wire connector (3)

ASSEMBLY & INSTALLATION INSTRUCTIONS:

1. Carefully remove the fixture from the carton and check that all parts and accessories are included as shown in the above illustration.

2. Turn off power
Before you start the installation, NEVER attempt any work without shutting off the electricity until the work is done.

- » Go to the main fuse, or circuit breaker, box in your home. Place the main power switch in the "**OFF**" position.
- » Place the wall switch in the "**OFF**" position.

3. Make assembly

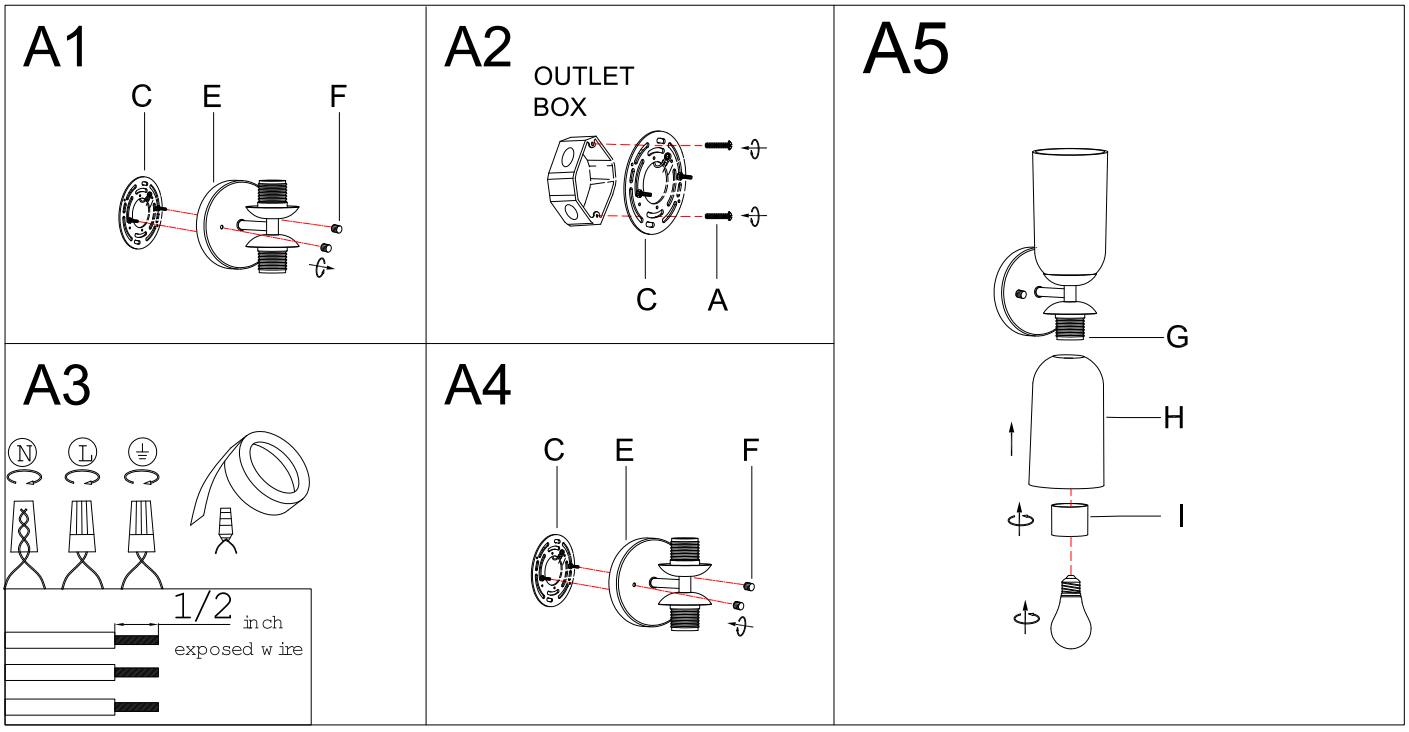

Step A1 » Unscrew knob nuts (F) from back plate (E) and mounting plate (C), then set them aside for later installation.

Step A2 » Carefully pass the supply wires from the outlet box through mounting plate (C). Secure mounting plate (C) to the outlet box with mounting screws (A).

Step A3 » Make wire connections

Connect wires as shown in the charts below. ***PLEASE NOTE THAT GROUND WIRE IS BARE COPPER WIRE, NEVER CONNECT OTHER WIRES TO GROUND WIRES.***

Connect ground wires according to the chart below

A

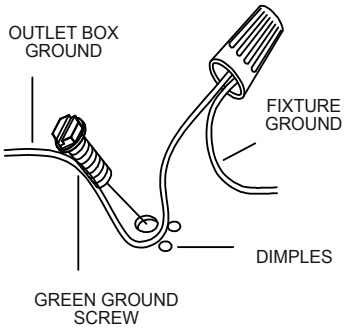

B

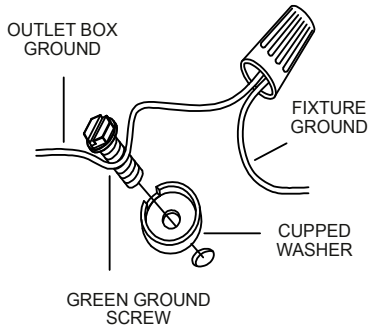

Connect wires according to the chart below

Connect Black or Red Supply Wire to:	Connect White Supply Wire to:
Black	White
*Parallel cord (round & smooth)	*Parallel cord (square & ridged)
Clear, Brown, Gold or Black without tracer	Clear, Brown, Gold or Black with tracer
Insulated wire(other than green) with copper conductor	Insulated wire(other than green) with silver conductor

* Note: When parallel wires (SPT I& SPT II) are used. The neutral wire is square shaped or ridged and the other wire will be round in shape or smooth (see illus.)

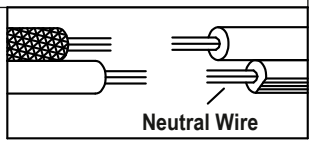

Twist wires together with plastic wire connectors until tightly joined, and wrap each connector with approved electrical tape. Be sure that no wire strands are exposed and then carefully tuck all wires into the outlet box.

Step A4 » Align the holes in back plate (E) with the pre-assembled mounting screws, then attach back plate (E) to mounting plate (C) with the previously removed knob nuts (F). Hand tighten until snug.

NOTE: Back plate (E) should be snug against the wall with ball nut (F).

If not, remove back plate (E), adjust the threaded length of pre-assembled mounting screws on mounting plate (C):

- ***Unscrew the pre-assembled hex nuts.***
- ***Screw the pre-assembled mounting screws in or out of mounting plate (C).***
- ***When the secure length is achieved, tighten the pre-assembled hex nuts and back to Step A4.***

Step A5 » 1) Remove socket rings (I) from sockets (G).

2) Carefully hang lampshades (H) onto sockets (G), and then screw socket rings (I) to sockets (G) to secure them as shown in the illustration.

- ***When installing socket ring (I), the orientation of socket ring (I) is that the side of rolled edge faces socket (G).***

3) Install the bulb (not included) (Please do not exceed the maximum wattage recommended on the socket.)

4.Check that everything is installed properly, then you can turn on the light. We hope you enjoy your new lighting!

ORDERING PARTS

Keep this sheet for future reference in case you need to order replacement parts. All parts for this fixture can be ordered from the place of purchase. Be sure to use exact wording from illustration when ordering parts.

CLEANING

To clean, wipe the fixture with a soft cloth. Clean glass with a mild cleaner (such as mild and non-abrasive soap). Do not use abrasive materials such as scouring pads or powders, steel wool or abrasive paper.