No matter what problems or questions you encounter during the installation or use of the chandelier, please feel free to contact us, we will reply you within 24 hours and quickly solve or answer for you!

When you leave a message to us online, please leave your order ID and case details, The more detailed and accurate your description, the more faster and accurate the solutions we could provide for you !

SAFETY INSTRUCTIONS

These instructions are provided for your safety. It is very important that you have read them completely before beginning the installation of your fixture.

1. We recommend installation by a licensed electrician.
2. This fixture requires E12 bulbs (INCLUDED), bulb rated wattage Max 5W, low wattage LED bulbs are recommended. To avoid risk of fire, do not exceed the recommended wattage.
3. If any special control devices are used with this fixture, follow the instructions carefully to assure full compliance with N.E.C. requirements. If there are any questions, contact a qualified electrical contractor.
4. Please make sure shut off the main electrical supply before installation, changing bulbs or cleaning light fixture.

WARNINGS

This is not a toy and the product has no play value.

Keep at least 3 ft away from cribs, bassinets, and toddler beds.
Keep out of reach of children under 3 years.

PREPARATION

1. Please prepare the E12 bulb that will be given to you in advance
2. Please keep the installation site clean and tidy to avoid missing small accessories.

INSTALLATION MANUAL

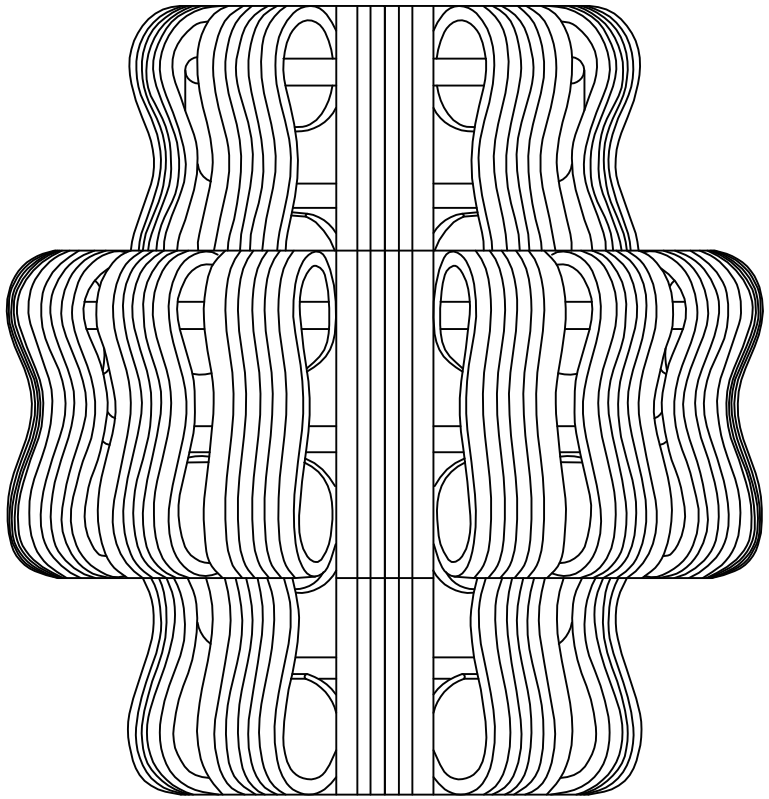

parts list				
A*4 	B*4 	C*1 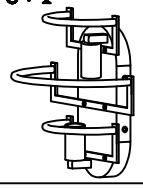	D*2 	E*23 
F*0	G*0	H*0	I*0	J*0

After-sales service E-mail address

:support@wansilighting.com

Installation Video and Product Website:

Scan the QR Code to Watch:



After-sales service E-mail address

:support@wansilighting.com

Installation Video and Product Website:

Scan the QR Code to Watch:



STEP IV Hanging Pendants

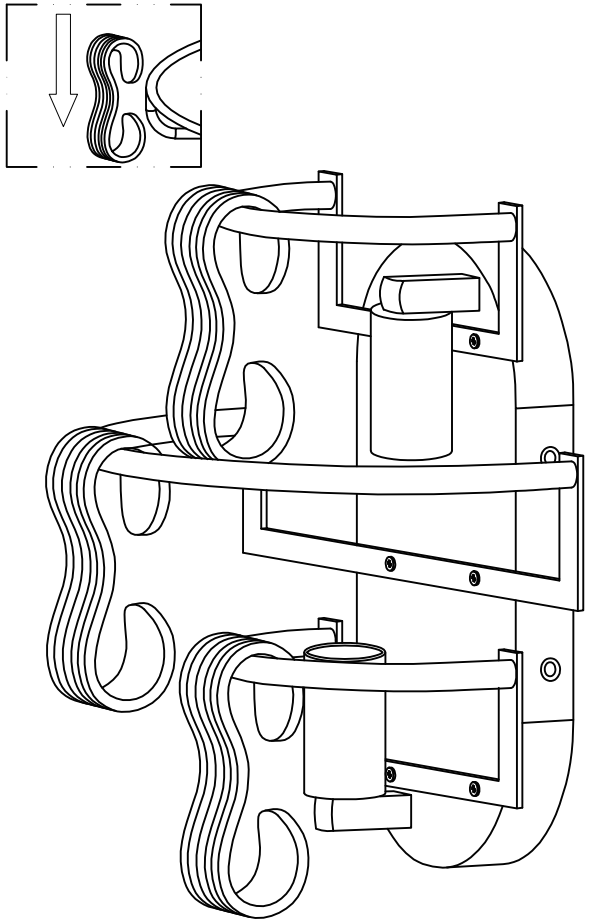

FAQ

Q: What if I wish to mount my chandelier on a higher ceiling guard?

A: It's very easy. You can buy some matching wires and longer chains at your local lighting store, or online store, connect them and you can mount it on a higher ceiling panel

STEP I Unpacking

Open the box, and take out all the accessories, you will get the following items.

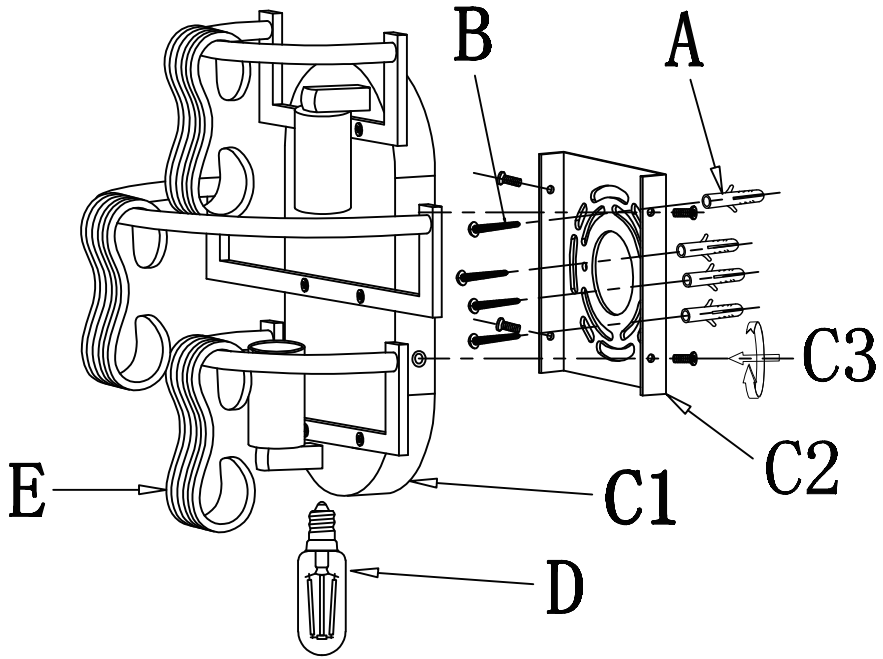

FAQ

Q: When I open the box, I find that the glass fittings are broken, what should I do?

A: As glass lampshade fittings are handmade and inherently fragile, we have taken this situation into consideration. We have prepared spare glass fittings in each box, which is sufficient for your needs installation. If there are more broken glass fittings, please contact us in time, we will send new glass fittings to you.

STEP II Branch Adjustment

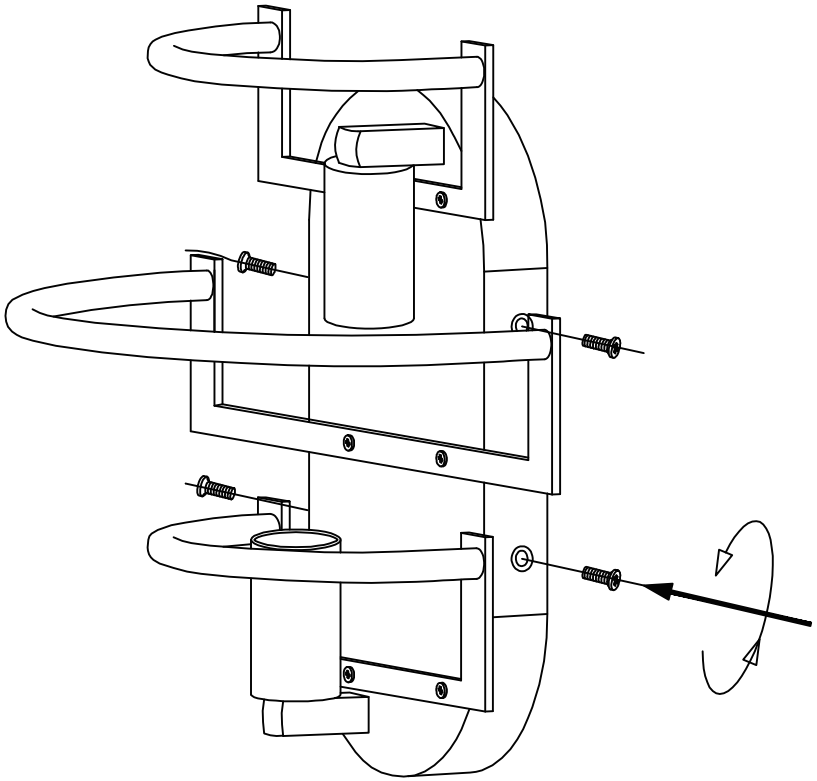

FAQ

Q: When installing iron pipe parts, do I need to install them in order?

A: No, you will need to use parts a and b to butt-lock the screws in place.

STEP III Wiring and Mounting

1. Adjust the length of hanging cable and wire according to your requirement.
2. Take off the mounting bracket from ceiling canopy, and install it on ceiling.
3. Connect lamp wires and your house wires together.
4. Install the lamp frame on ceiling.

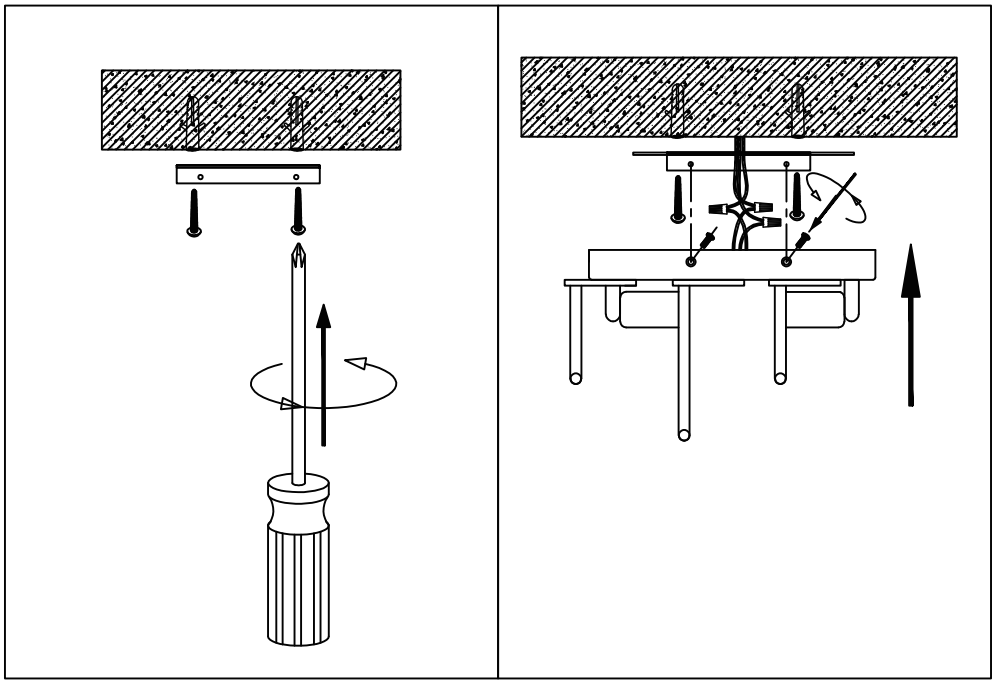

FAQ

Q: How do I differentiate between N/L wiring and a ground wire?

A: We have already distinguished between the N/L markings on the wires and the brass wire on the mounting bracket is the ground wire.