ASSEMBLY INSTRUCTIONS

DRESSER

(BOX 1)
BOX OF DRESSER

NO	ITEM	QTY
A	DRESSER 	1 pc
B	BUN FOOT 	4 pcs
C	BOTTOM CENTER LEG 	1 pc

(BOX 1)
HARDWARE LIST

NO	ITEM	QTY
1	JCBC Bolt m6x50mm Blk 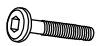	4 pcs
2	Spring Washer 1/4" Blk 	4 pcs
3	Flat Washer 1/4"IDx13mmOD Blk 	4 pcs
4	Allen Key m4x110mm With Ball Blk 	1 pc

STEP 1 : Pull the bottom drawer and take out the Bunfoot carton (B). Assemble the Bun Foot (B) with JCBC Bolt (1),Spring washer (2),Flatwasher (3) and securing with Allen Key (4) as shown.

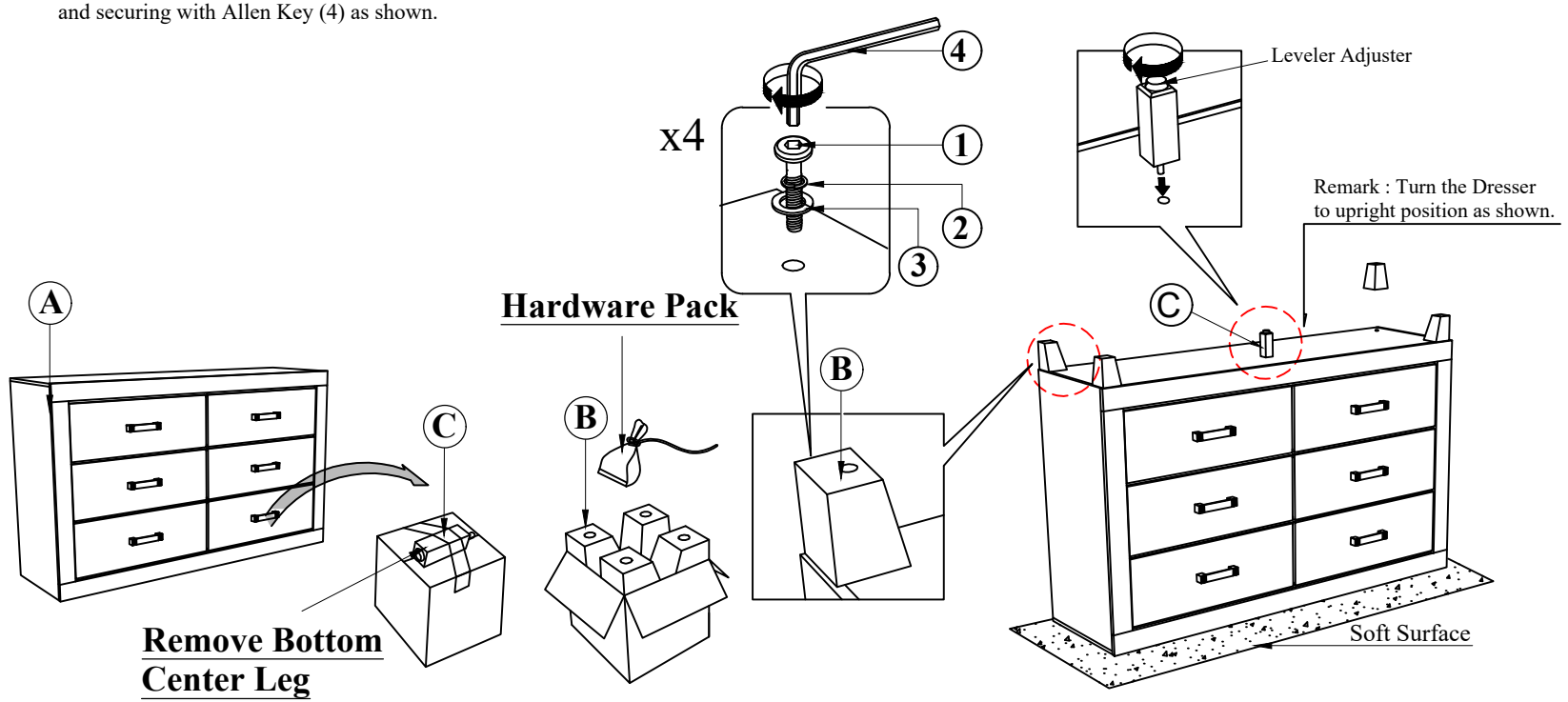



COMPLETED ASSEMBLY

NOTE : MUST TIGHTEN SCREWS PERIODICALLY WITH USE SCREW WILL BECOME LOOSE CHECK TIGHTNESS OF ALL SCREW EVERY 6-8 WEEKS.