Assembly Instructions

Caution : You must read this before you proceed

Care & Maintenance

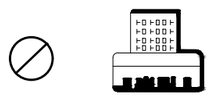

- Not for commercial use. For residential use only.

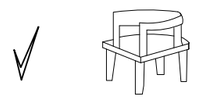

- Furniture may scratch floors. We recommend using furniture pads to protect your floors.



- Do not put hot items directly on furniture surface.

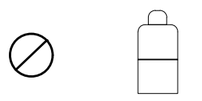

- Do not clean furniture with harsh cleansers or polish.

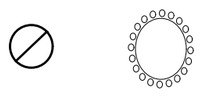

- Do not place furniture under direct sunlight.



- Do not place furniture near heating or cooling vents.



- Do not write on furniture without a padded barrier to protect the surface.

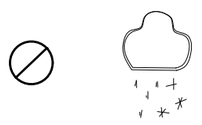

- Do not place furniture outside . For indoor use only.

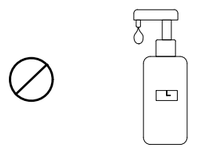

- Stains may be removed with mild soap solution and damp cloth.



- Children should not climb or jump on the furniture.

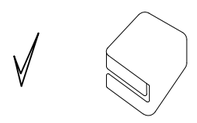

- Dust and pick-up spills using a clean, non-colored, lint-free cloth.

Please look in carton for hardware packs and legs.
Sets often ship in multiple boxes and may arrive a day or two apart.

TABLE

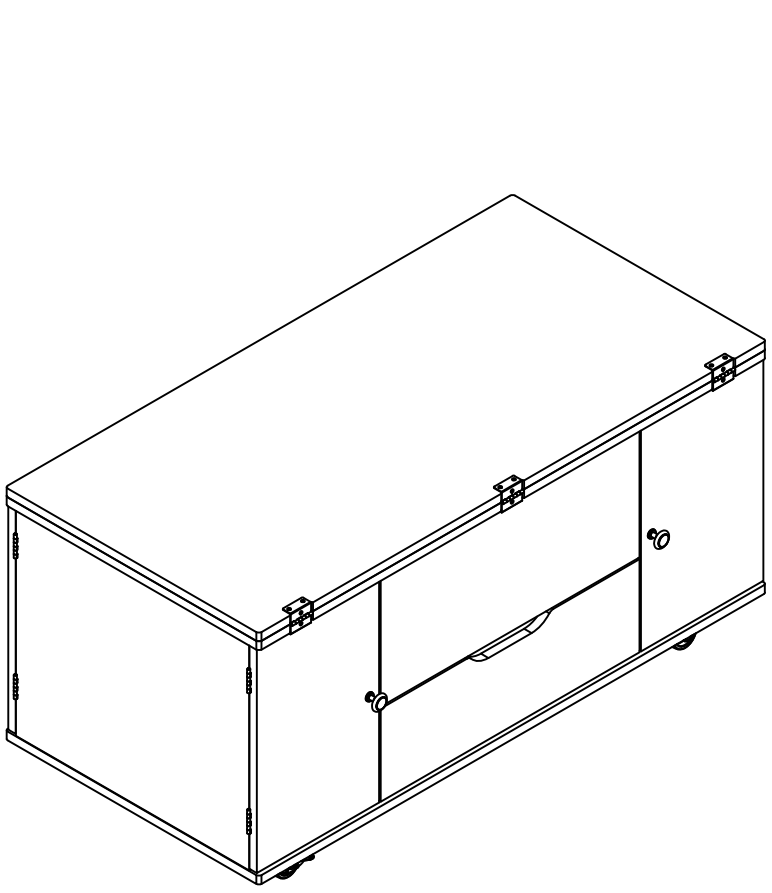

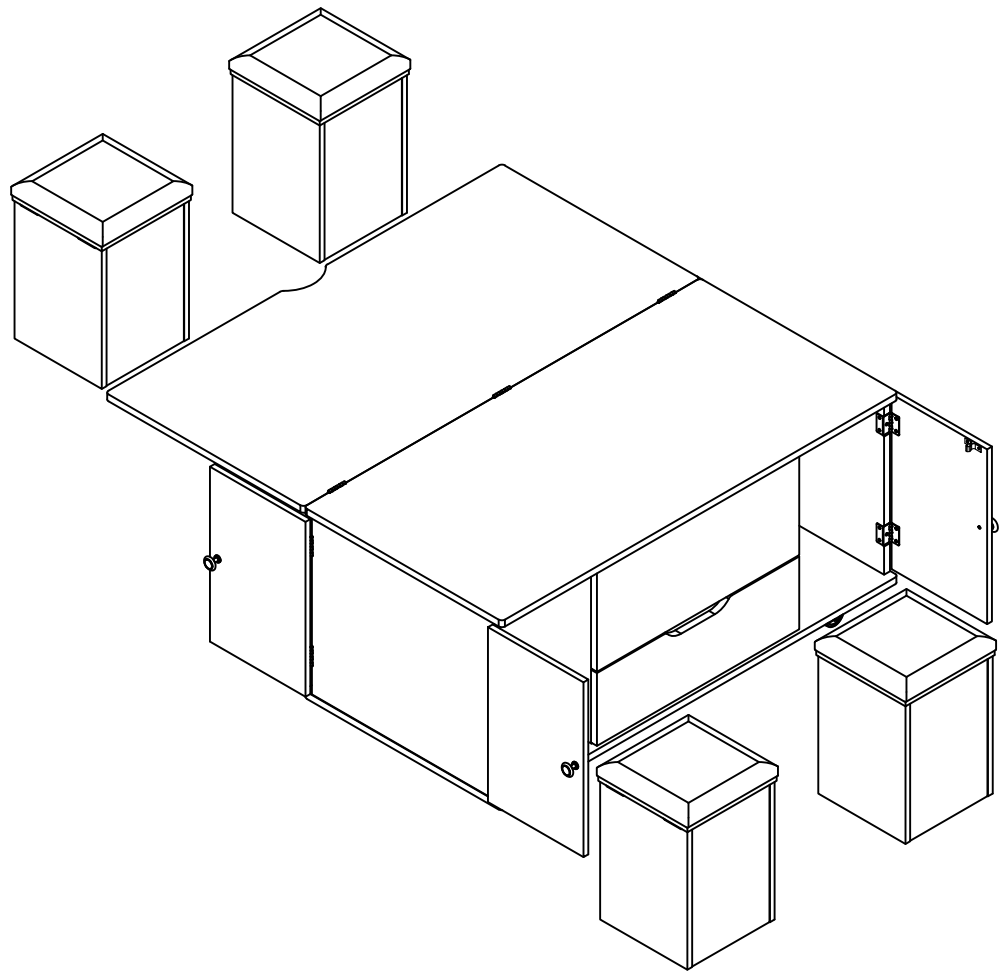

CAUTION : This Table is NOT a TOY. Keep your child / children at bay in the process of assembly.
For turning the Table and to prevent damage to the Table, 02 persons may be needed to executethis action.

Parts List BOX-1/2 SKU N770P535029

Label	Picture	Description	QTY
4	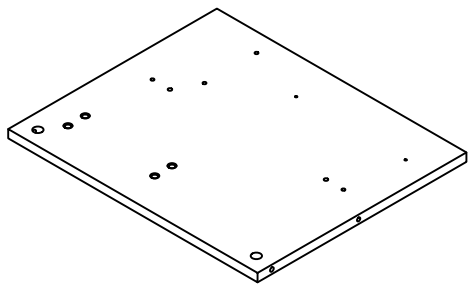	Left Side Panel	1
5	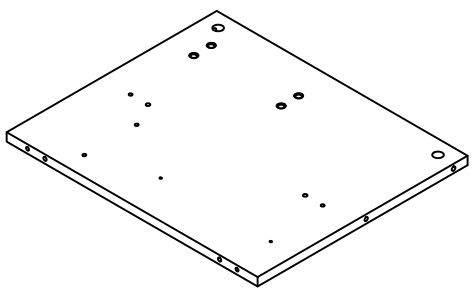	Right Side Panel	1
6	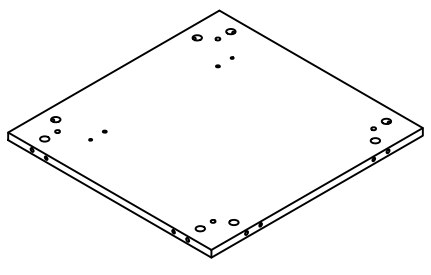	Deck Plate	1

Parts List BOX-1/2 SKU N770P535029

Label	Picture	Description	QTY
16	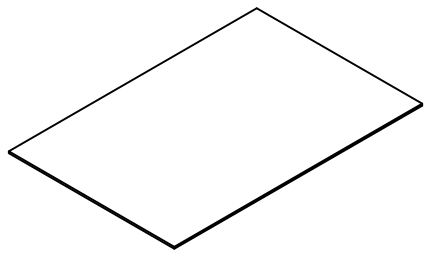	Drawer Bottom Plate	1
18	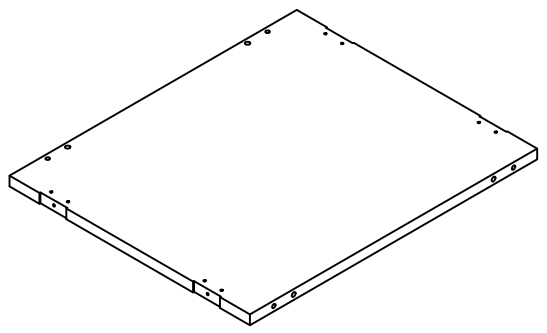	Outer left/right panel	2
21	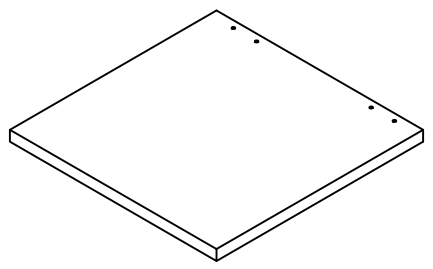	Seat Panel	4
25	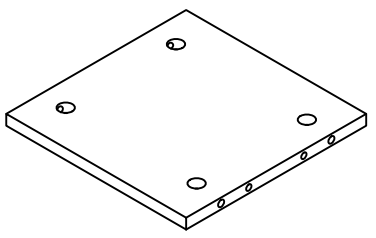	Stool Base Plate	4
26	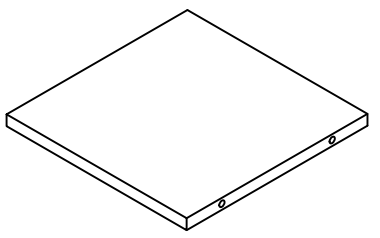	Stool Vertical Board	4

Parts List BOX-2/2 SKU N770P535030

Label	Picture	Description	QTY
1	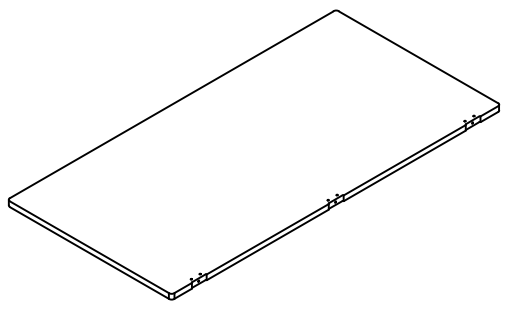	Panel 1	1
2	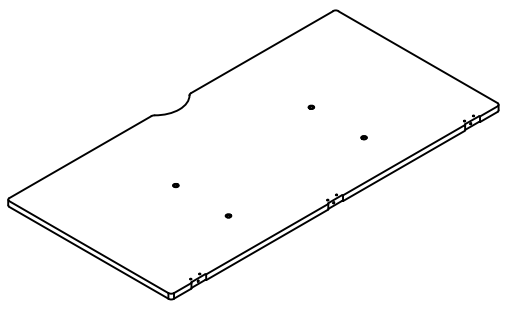	Panel 2	1
3	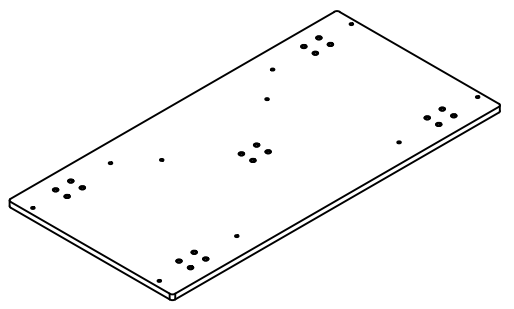	Base Plate	1
7	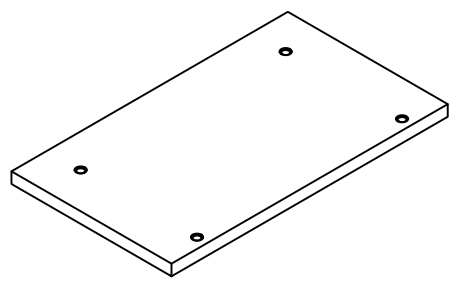	Inner Panel	1
8	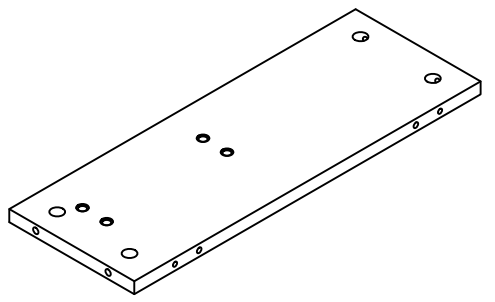	Inner Left Side Panel	1
9	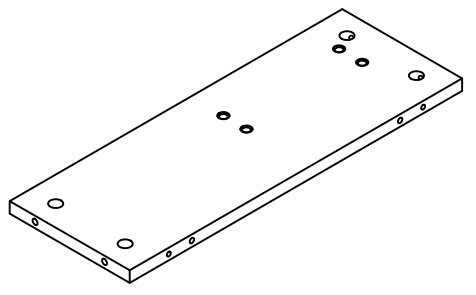	Inner Right Side Panel	1
10	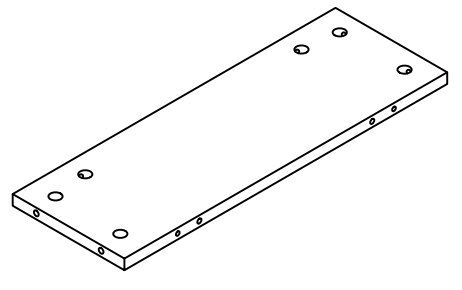	Inner Vertical Panel	1

Parts List BOX-2/2 SKU N770P535030

Label	Picture	Description	QTY
11	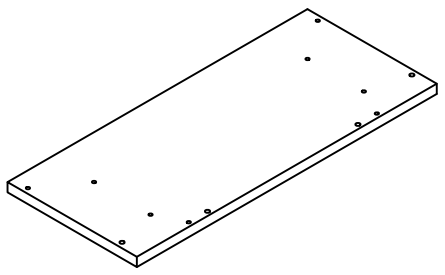	Dummy Drawer Panel	2
12	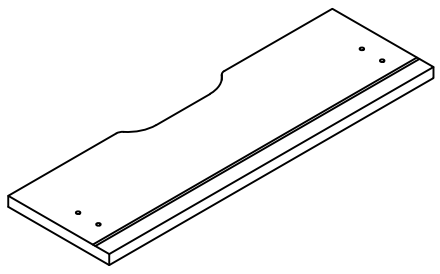	Drawer Front Panel	1
13	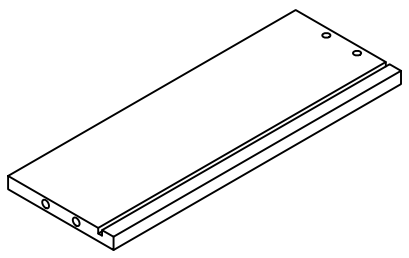	Drawer Left Panel	1
14	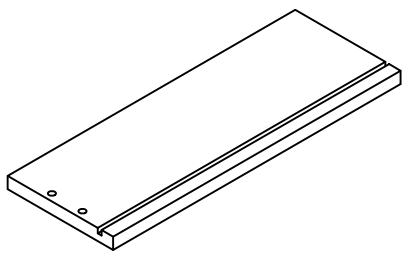	Drawer Rignt Panel	1
15	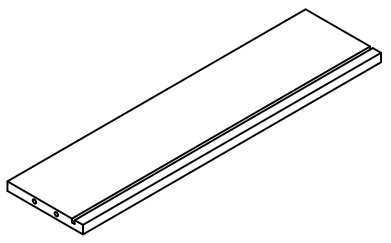	Back Panel Of The Drawer	1
17	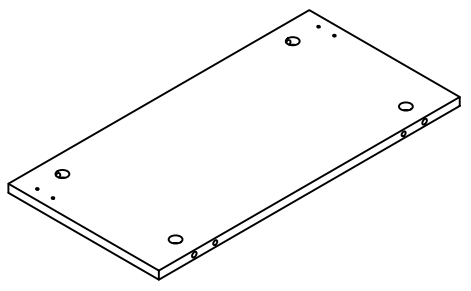	Left/Right Roof Panel	2
19	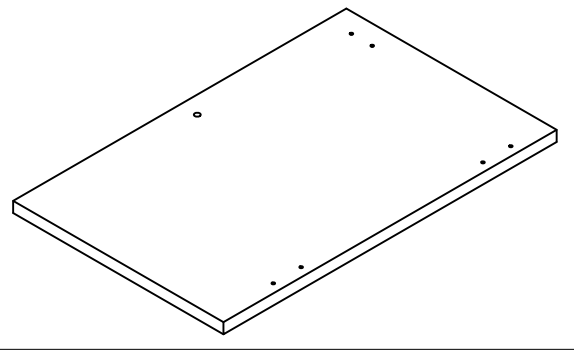	Left door panel	2

Parts List BOX-2/2 SKU N770P535030

Label	Picture	Description	QTY
20	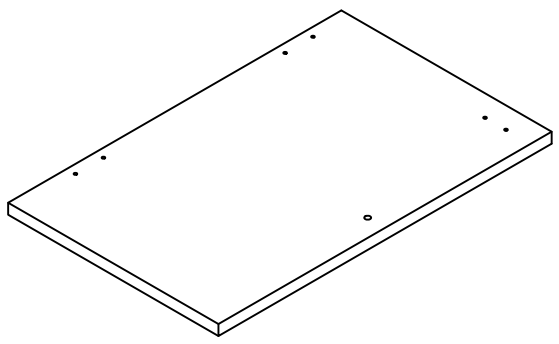	Right door panel	2
22	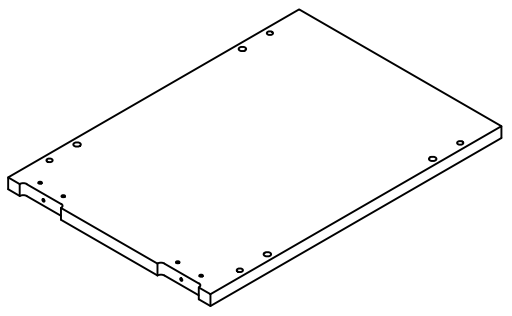	Stool Left Board	4
23	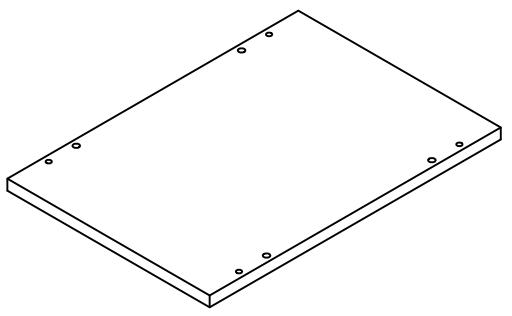	Stool Right Board	4
24	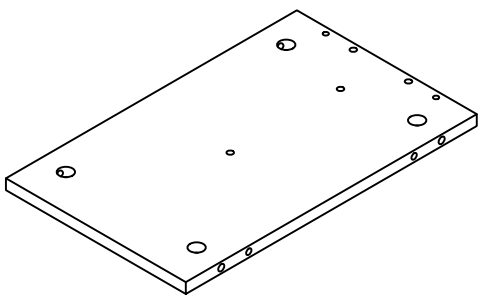	Stool Front And Rear Board	8
27	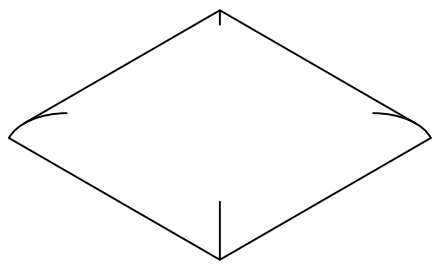	Soft Panel Surface	4
BOX	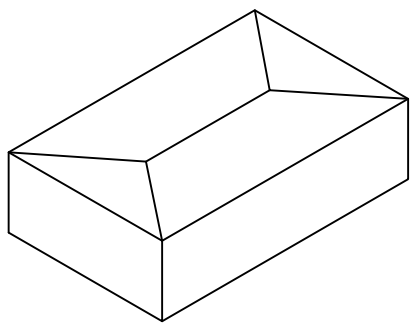	Accessories box	1

Hardware BOX-2/2 SKU N770P535030

Label	Picture	Description	QTY
A	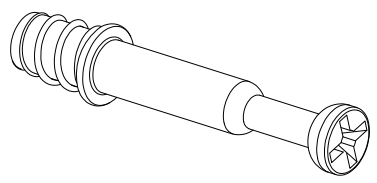	Cam Bolt (Ø6x35mm)	86+4
B	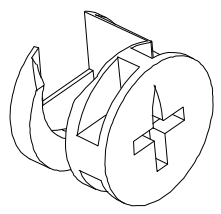	Cam Nut (Ø15x10mm)	86+4
C	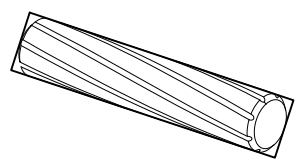	Dowel (Ø6x30mm)	100+4
D	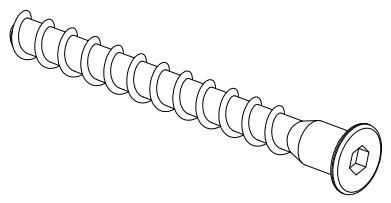	Screw (Ø7x38mm)	14+2
E	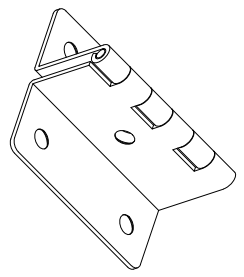	Four-Fold Hinge	3
F	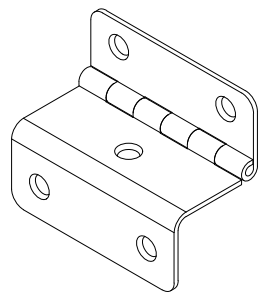	Three-Fold Hinge	16
G	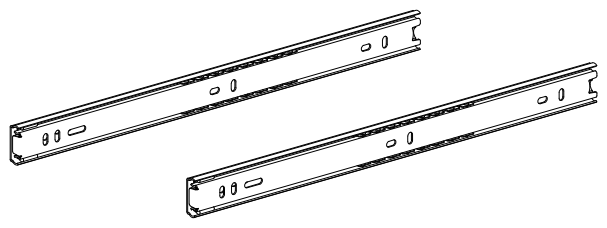	Sliding Rails (L=285mm)	1
H	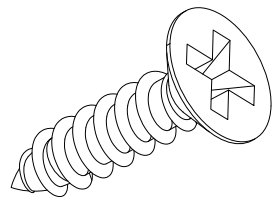	Screw (Ø6xØ3x12mm)	90+5

Hardware BOX-2/2 SKU N770P535030

Label	Picture	Description	QTY
I	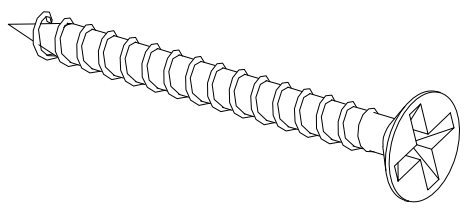	Screw (Ø8xØ4x35mm)	4+2
J	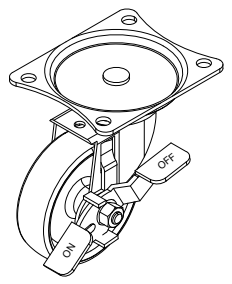	Swivel Wheels (With brakes)	2
K	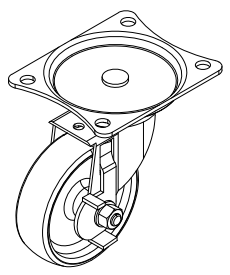	Swivel Wheels (Without brakes)	3
L	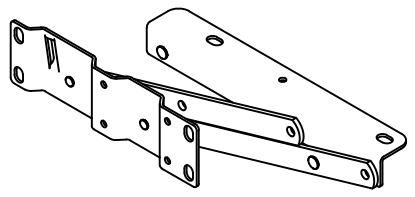 Left	Lift Mechanism-Left (80N)	1
R	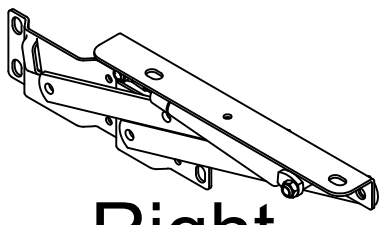 Right	Lift Mechanism-Right (80N)	1
M	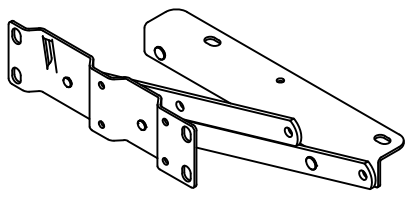 Left	Lift Mechanism-Left (140N)	1
N	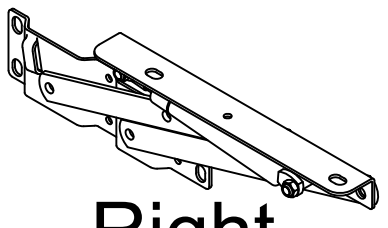 Right	Lift Mechanism-Right (140N)	1
O	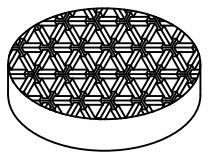	Pad Ø15*3mm	16+2

Hardware BOX-2/2 SKU N770P535030

Label	Picture	Description	QTY
P	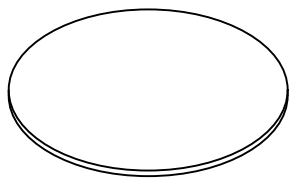	Pad Ø20mm	70+5
Q	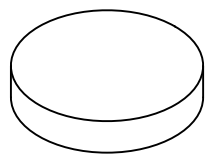	Pad Ø15*3mm	4
S	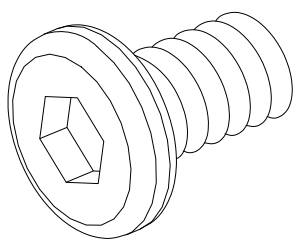	Bolt (M6*10mm)	44+3
T	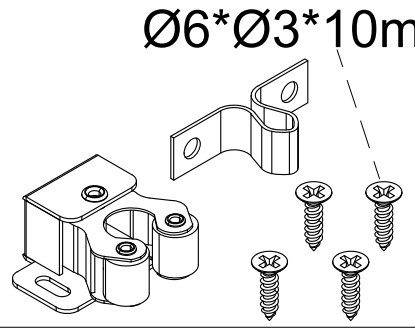	Pinball lever mechanism	4
U	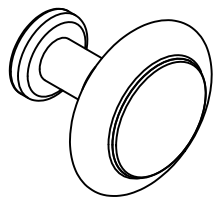	Pull handle	4
V	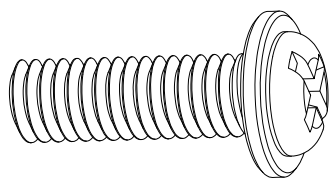	Bolt (M4x16mm)	4+1
W	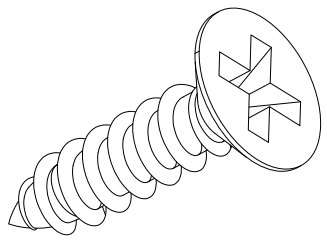	Screw (Ø6xØ3x14mm)	18+4
X	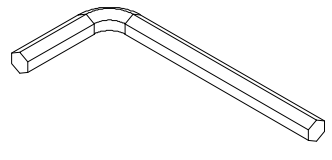	Allen Wrench (4mm)	1

Hardware BOX-2/2 SKU N770P535030

Label	Picture	Description	QTY
Y	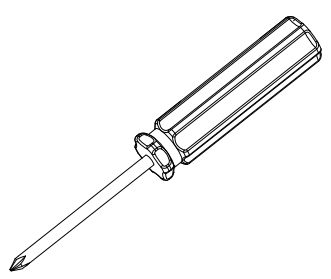	Screwdriver	1

Assembly Preparation

Before Beginning Assembly:

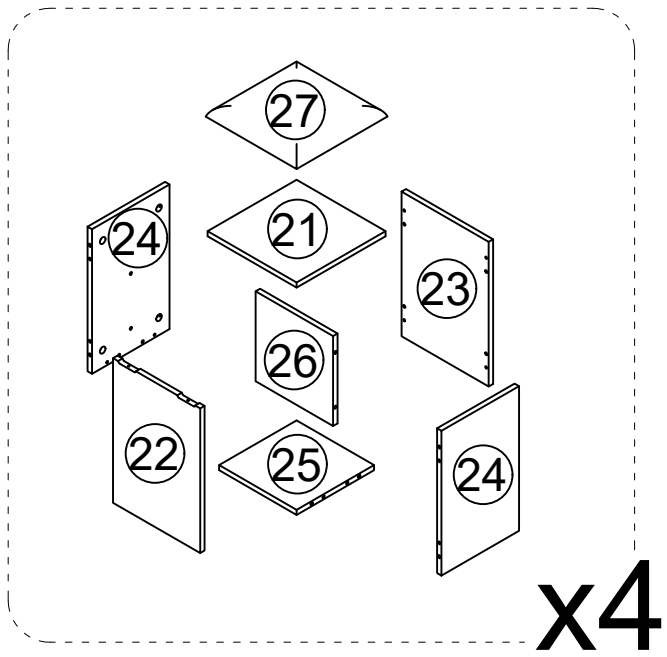

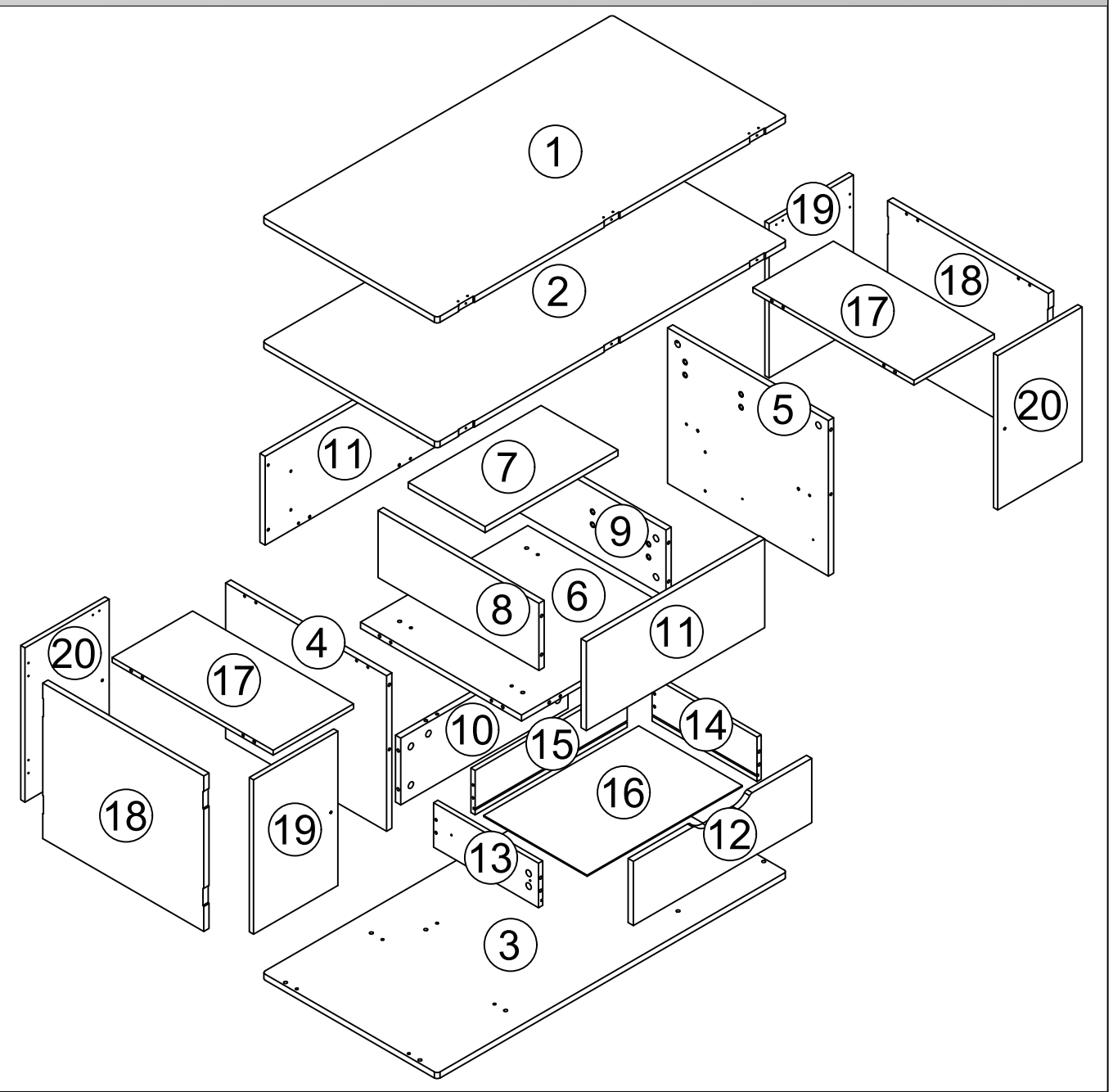

- Read instructions, cover to cover-
- Have 2 adults on hand for assembly-
- Do not assemble on flooring or carpet-
- Assemble on a clean non-marring surface (packing foam)-
- Save all packaging until finished-

Assembly Steps

This Table has multiple parts and may require up to 60 minutes to assemble. To give you an overview of the Table parts, the above picture is to help you put the various parts into perspective. Please read through the instructions below to familiarise yourself with the parts and steps before assembly.

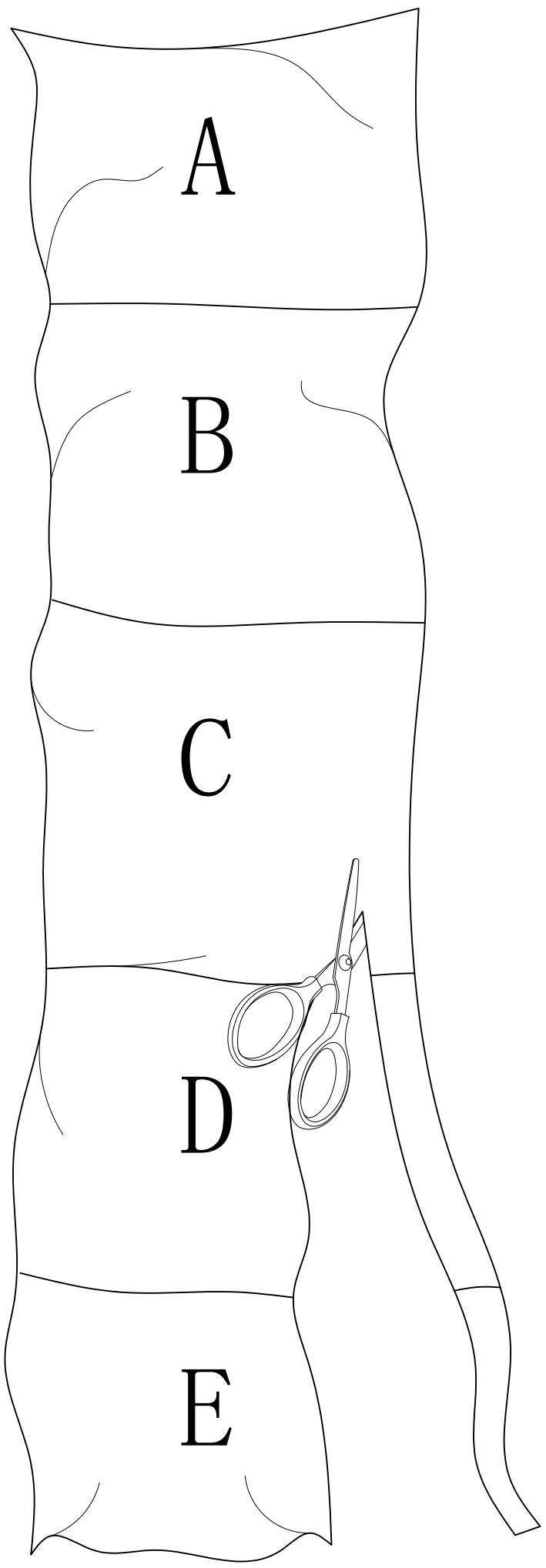

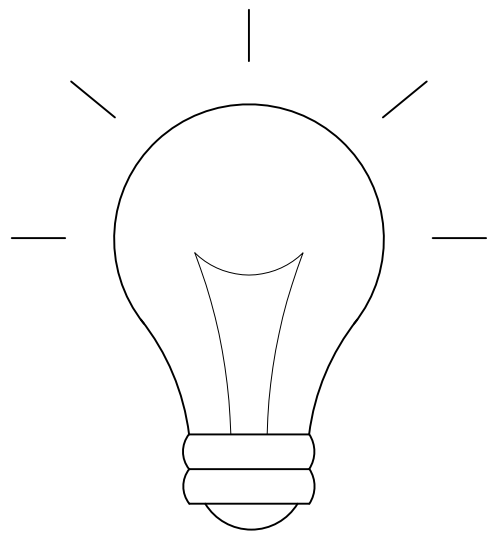

friendly reminder

To avoid errors and confusion during the installation of accessories, use the type and quantity of hardware accessories according to the installation procedure described in the instructions. First, unroll the accessories bag and lay out the hardware accessories, cut holes in the side, and take out the hardware accessories

STEP 1

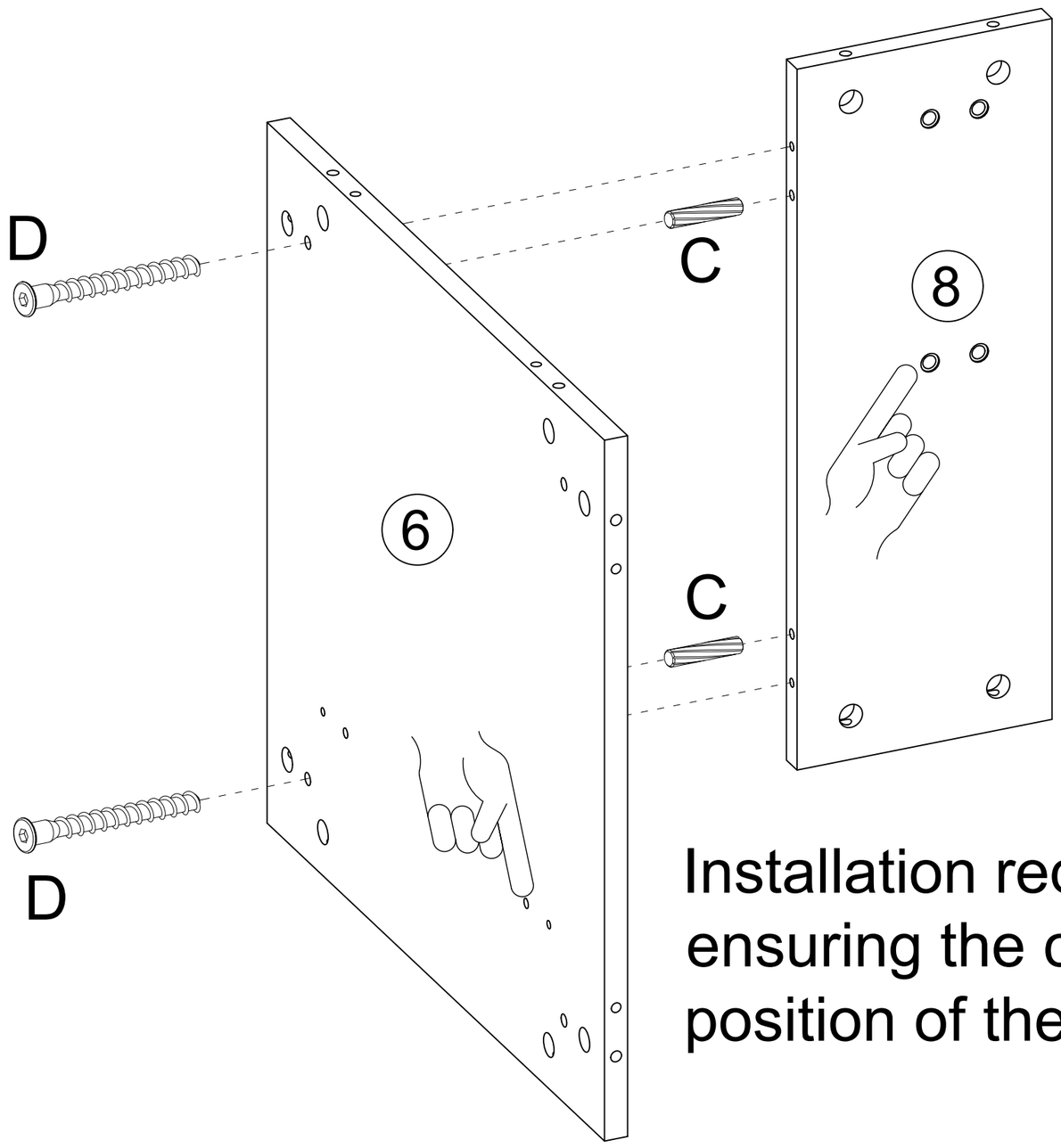

Installation requires ensuring the correct position of the holes.

Cx2



Ø6*30mm

Dx2



Ø7*38mm

Connect Deck Plate(⑥) and Inner Left Side Panel(⑧) with Dowel(C) , and then lock them with Screw (D) .

STEP 2

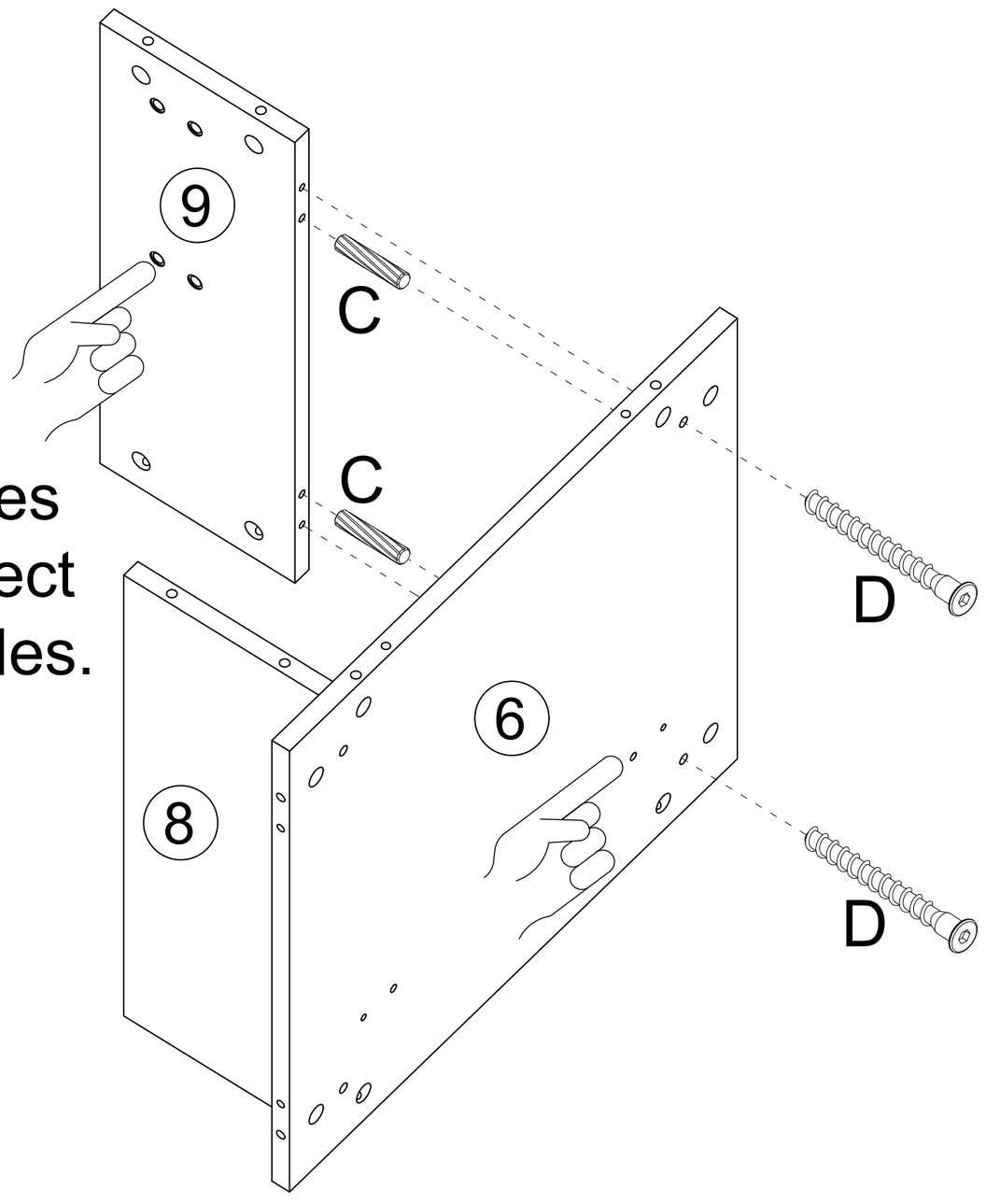

Installation requires ensuring the correct position of the holes.

Cx2



Ø6*30mm

Dx2



Ø7*38mm

Connect Deck Plate(⑥) and Inner Right Side Panel(⑨) with Dowel(C) , and then lock them with Screw(D) .

STEP 3

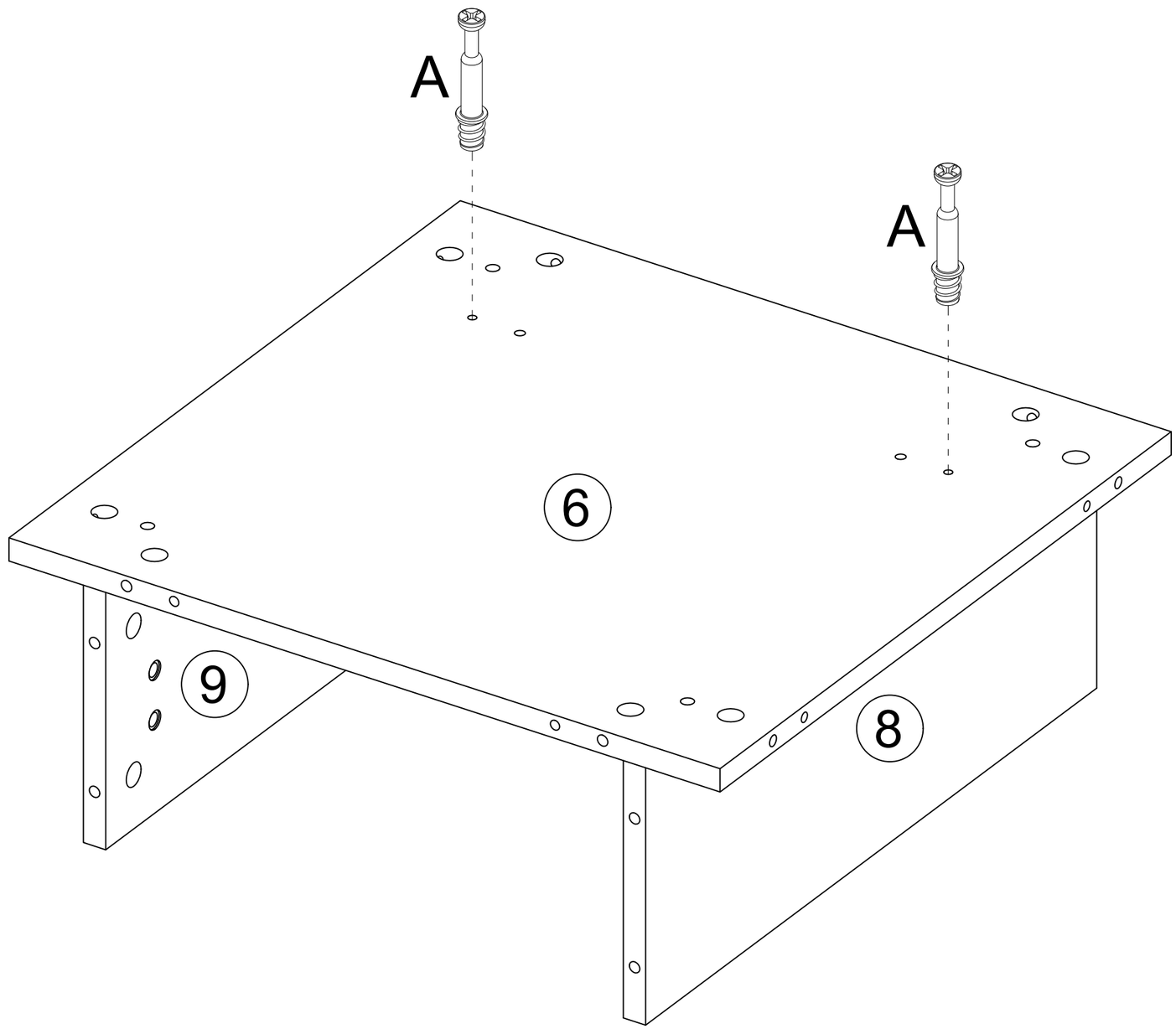

A x2

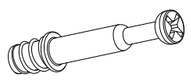

Ø6*35mm

Lock Cam Bolt(A) on to Deck Plate(⑥).

STEP 4

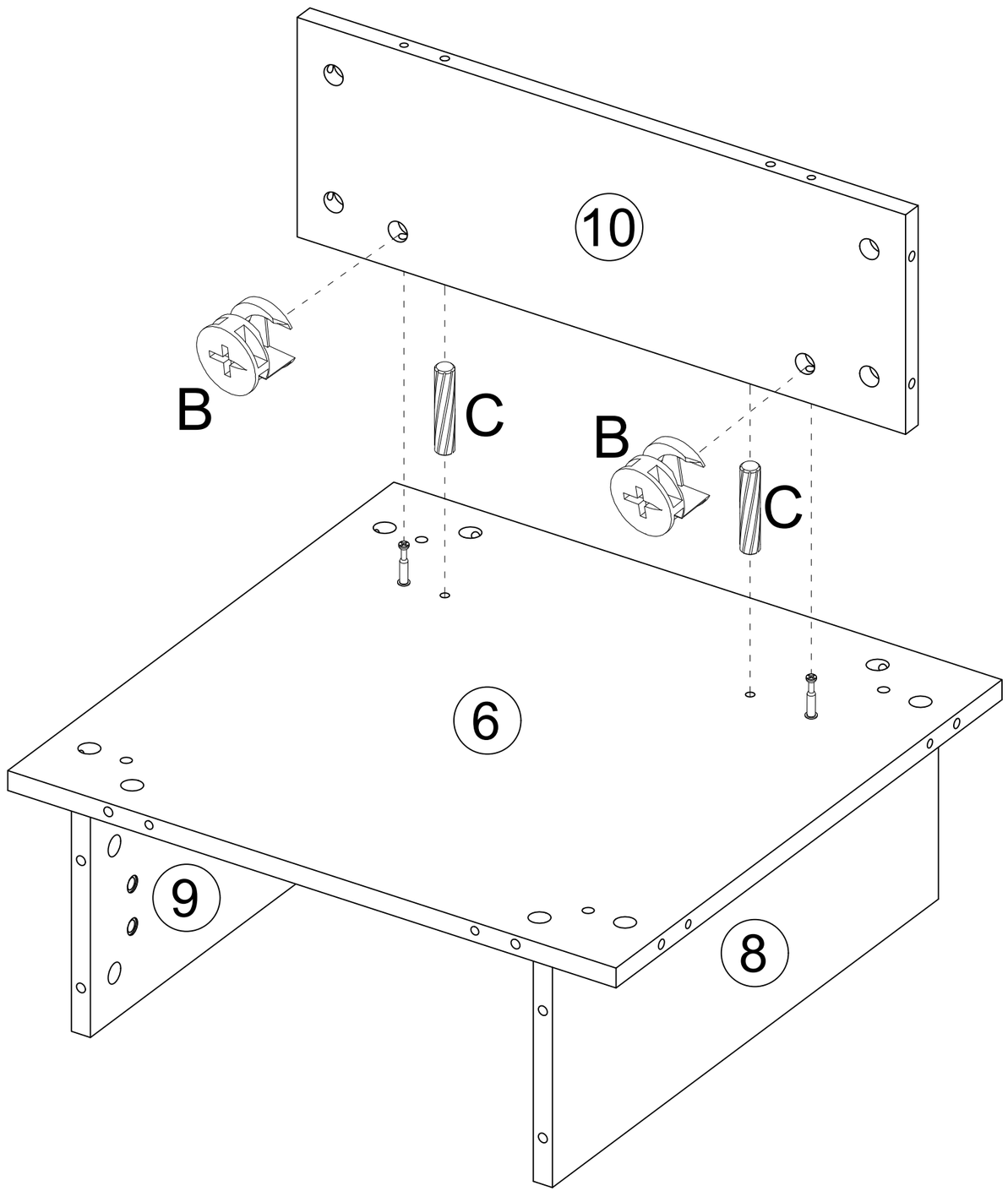

B x2



Ø15*10mm

C x2



Ø6*30mm

Connect Deck Plate(⑥) and Inner Vertical Panel(⑩) with Dowel(C) and then lock Cam Nut(B) .

STEP 5

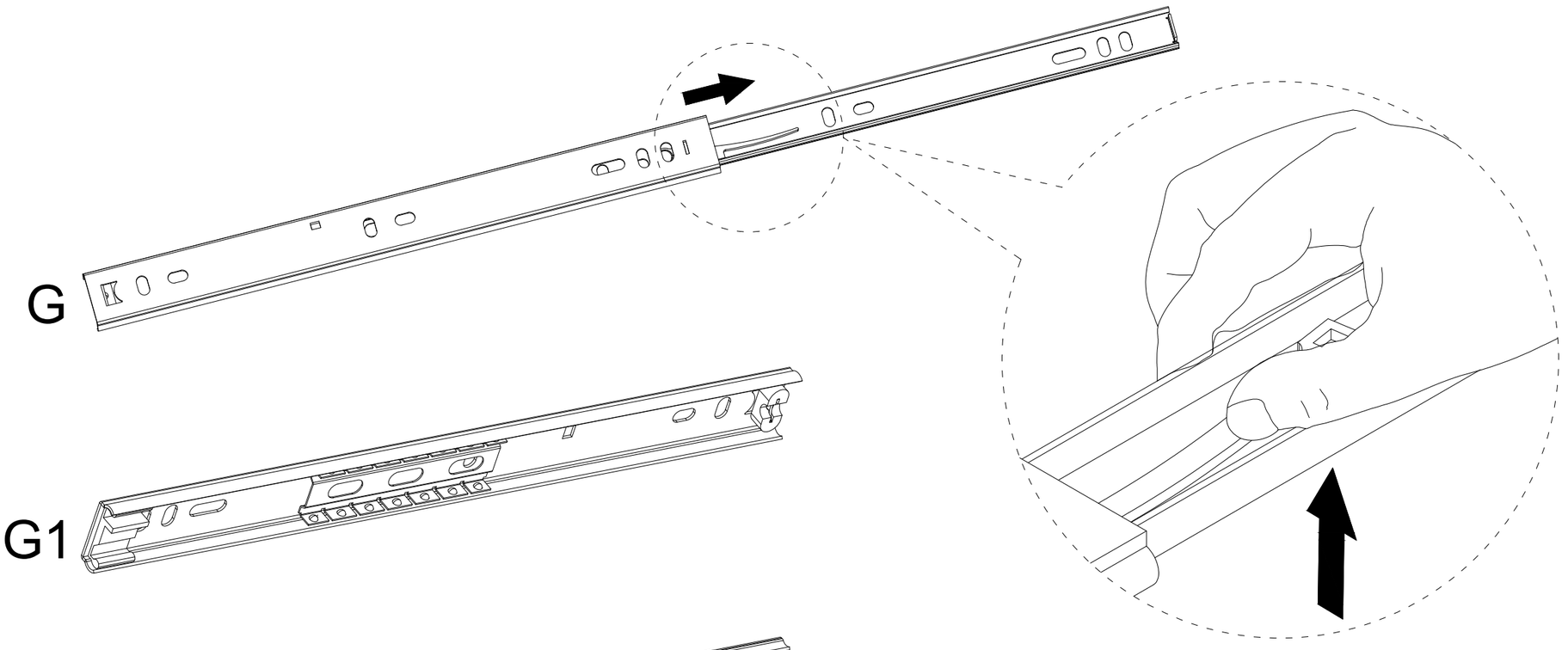

Gx1

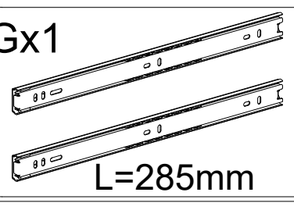

Separate Sliding Rails (G) into Sliding Rails (G1) and (G2).

STEP 6

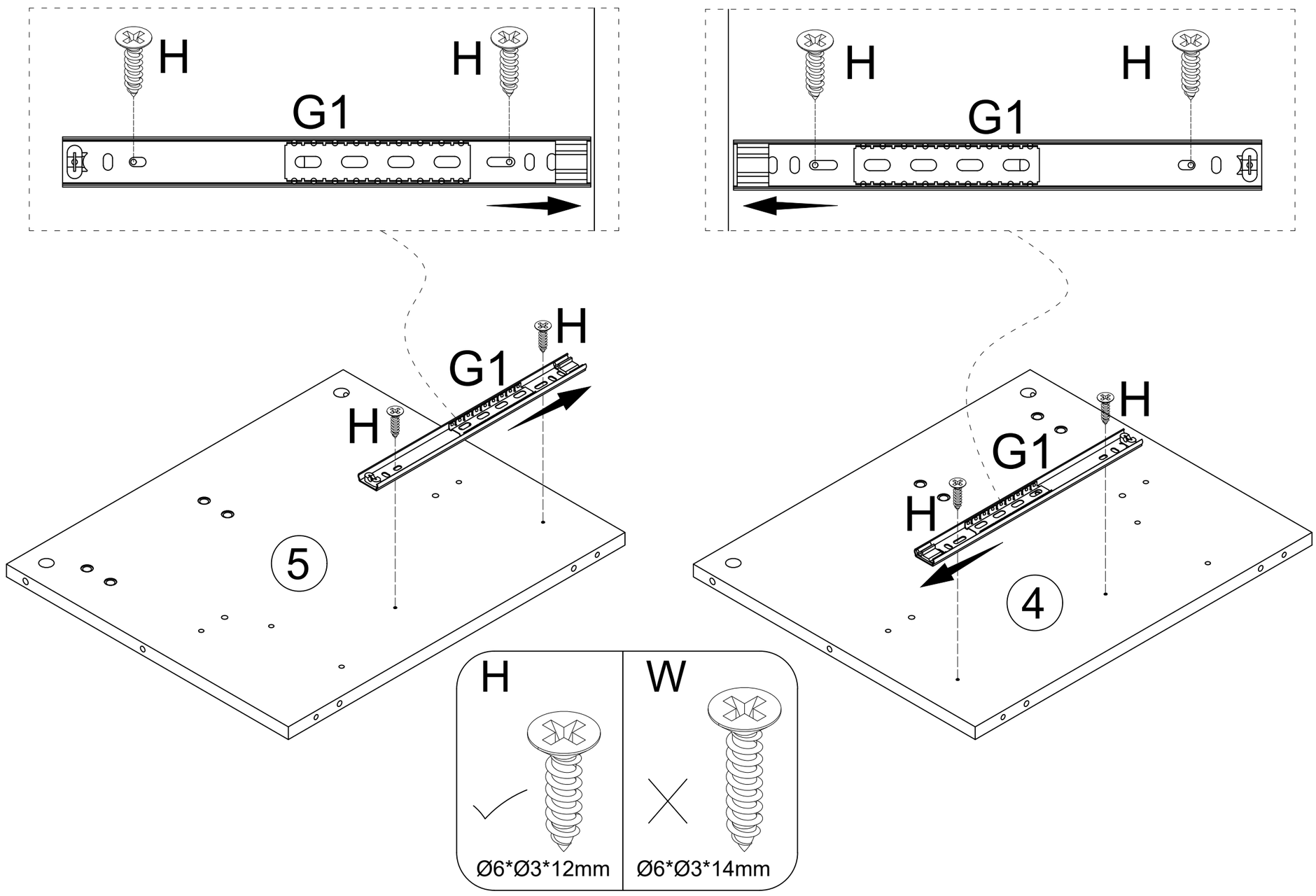

G1x2

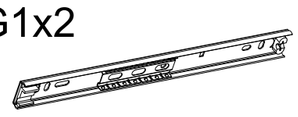

Hx4

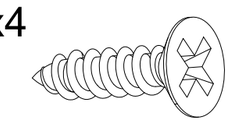

Use Screw(H) to securely fasten and fix Sliding Rails (G1) onto Left Side Panel(④) and Right Side Panel(⑤).

STEP 7

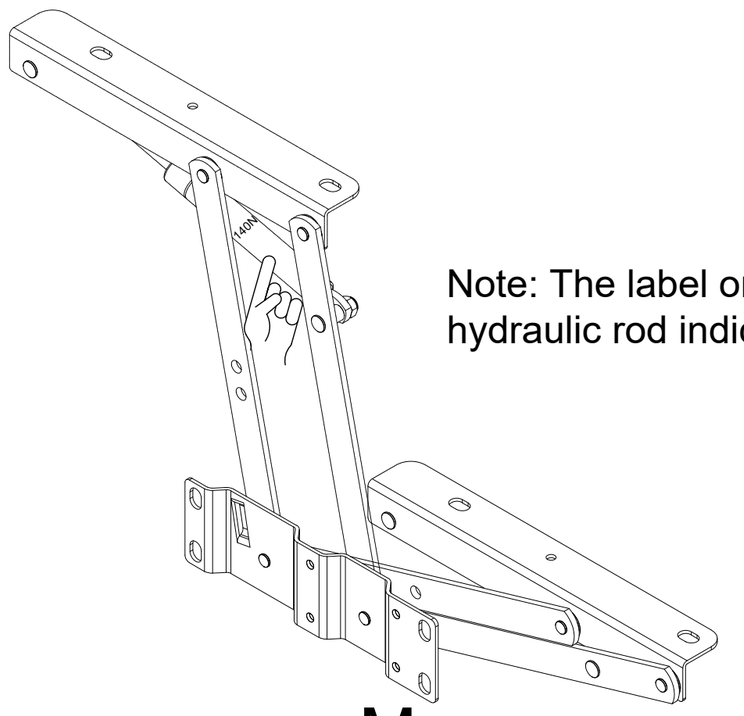

M

Note: The label on the hydraulic rod indicates 140 N.

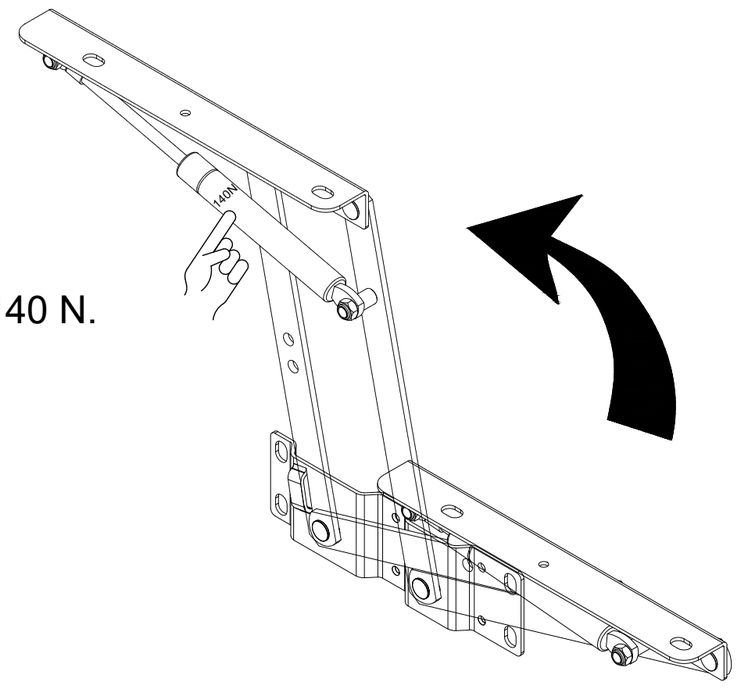

N

Mx1

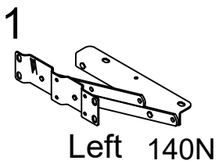

Left 140N

Nx1

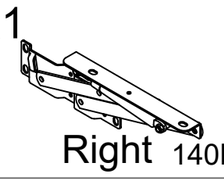

Right 140N

Open the Lift Mechanism(M) and (N)

STEP 8

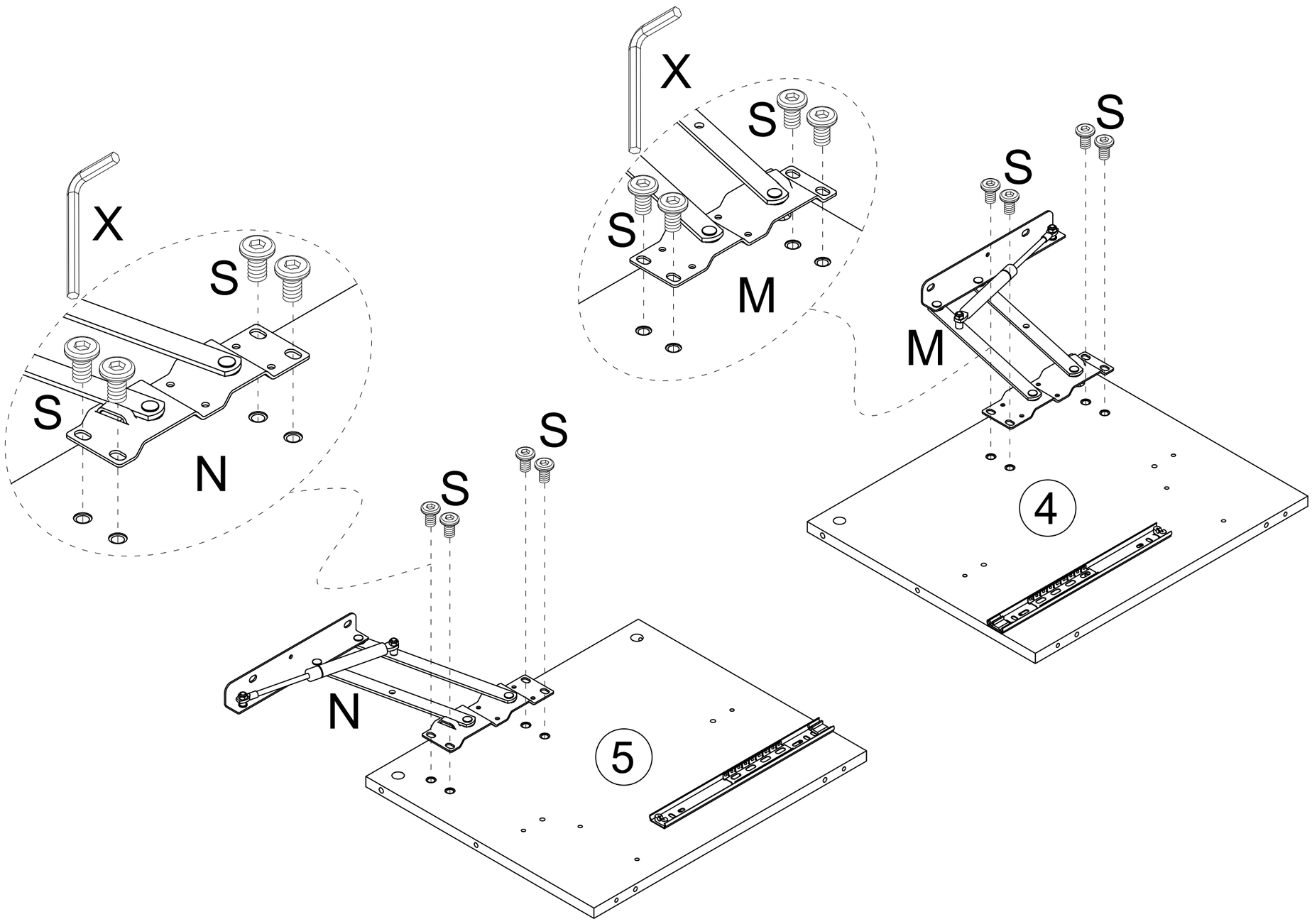

Xx1

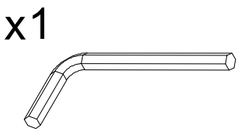

4mm

Sx8



M6*10mm

Mx1

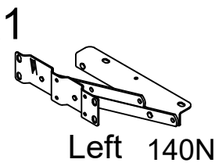

Left 140N

Nx1

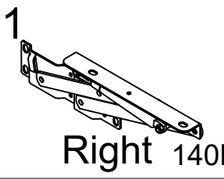

Right 140N

Use Bolt(S) to lock and fix Lift Mechanism-Left(M) onto Left Side Panel(④), and Lift Mechanism-Right(N) onto Right Side Panel(⑤).

STEP 9

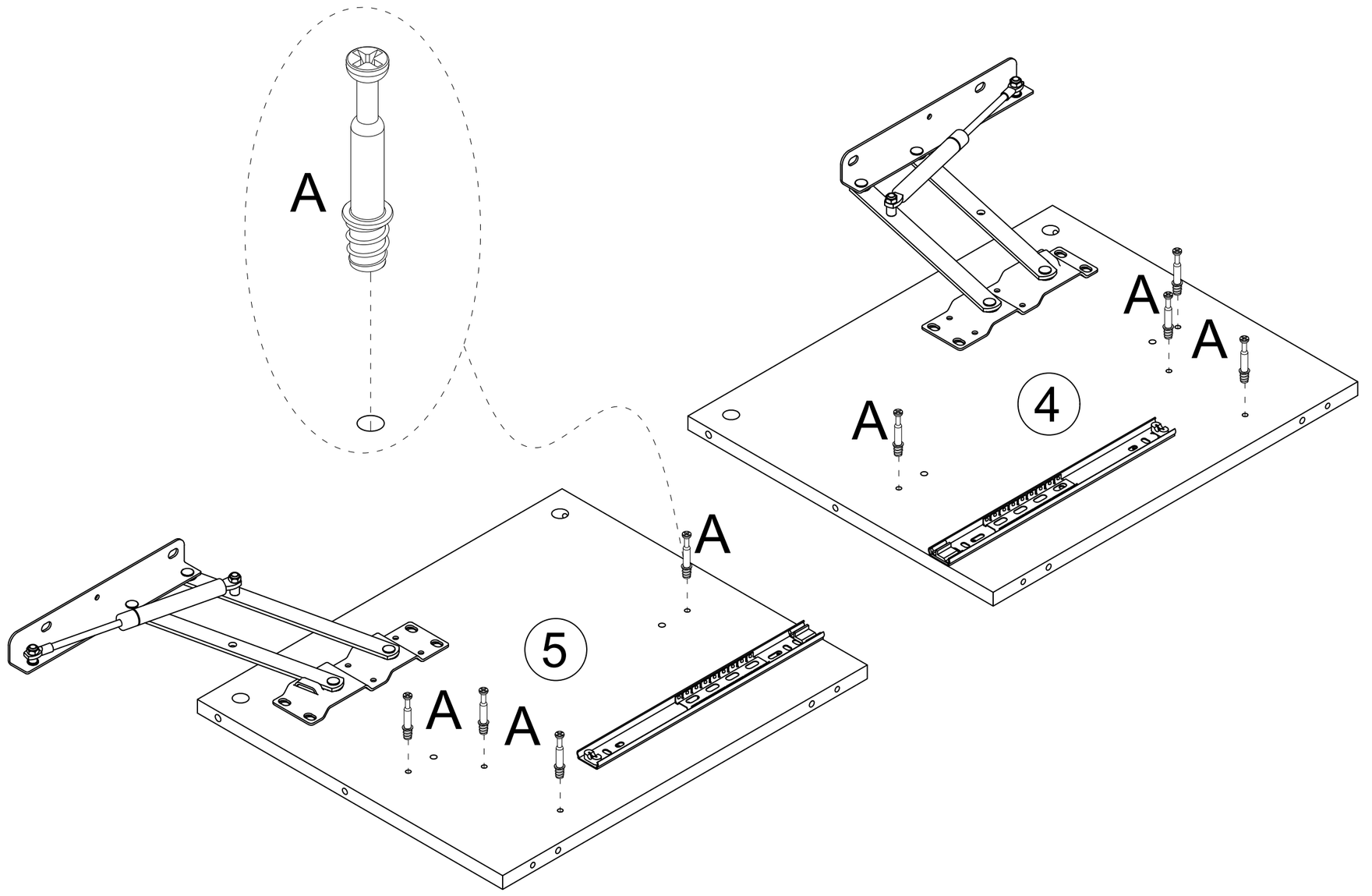

Ax8

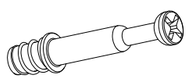

Ø6*35mm

Lock Cam Bolt(A) onto Left Side Panel(④) and Right Side Panel(⑤)

STEP 10

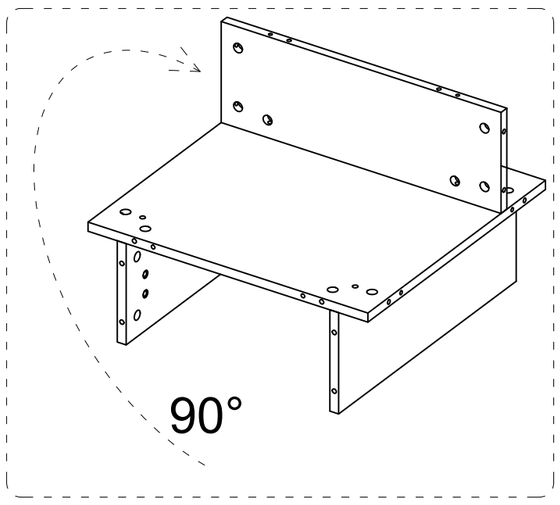

When installing, be sure to hold it steady with your hands.

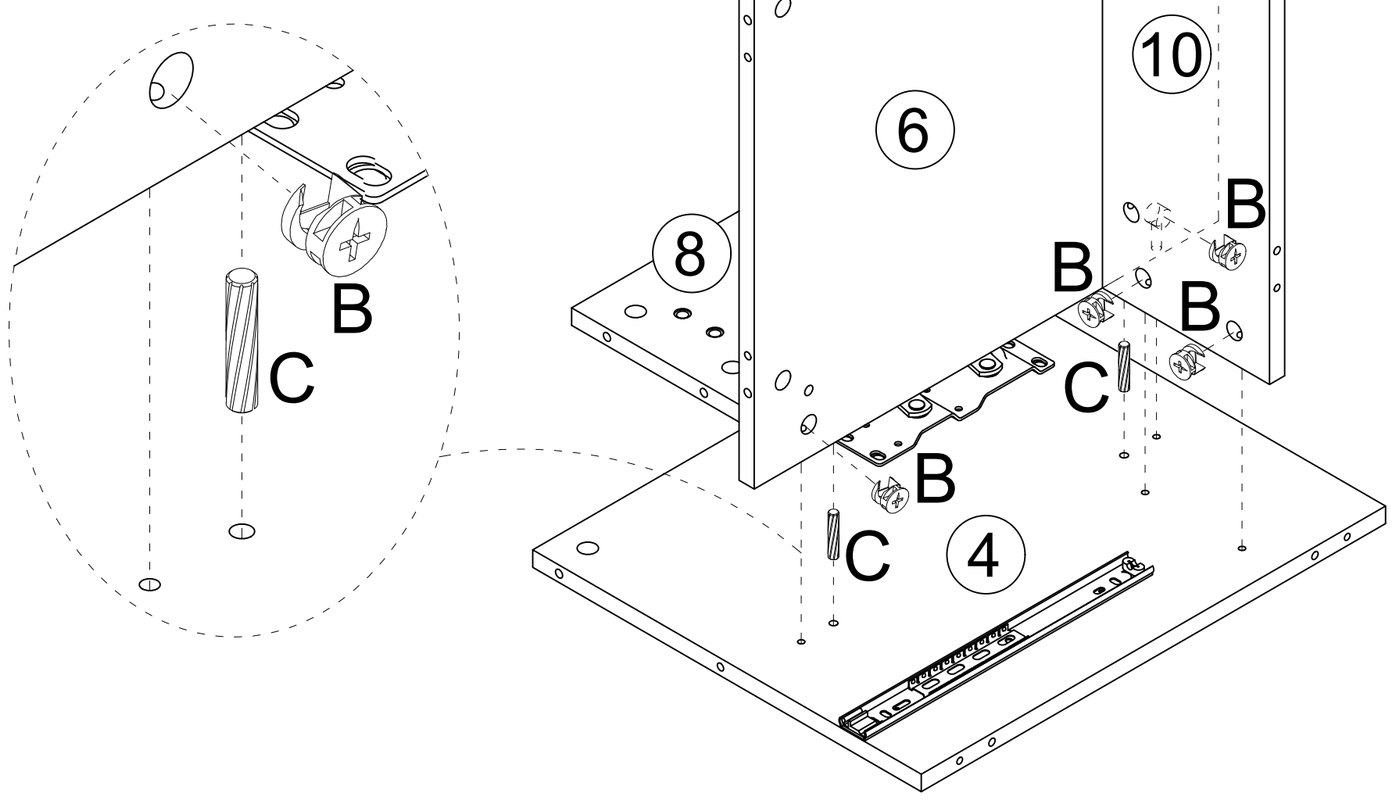

Bx4



Ø15*10mm

Cx2



Ø6*30mm

After installing the components as per step(4) , connect the installed components with Dowel(C) and Left Side Panel(④), and then lock Cam Nut(B).

STEP 11

When installing, be sure to
hold it steady with your hands.

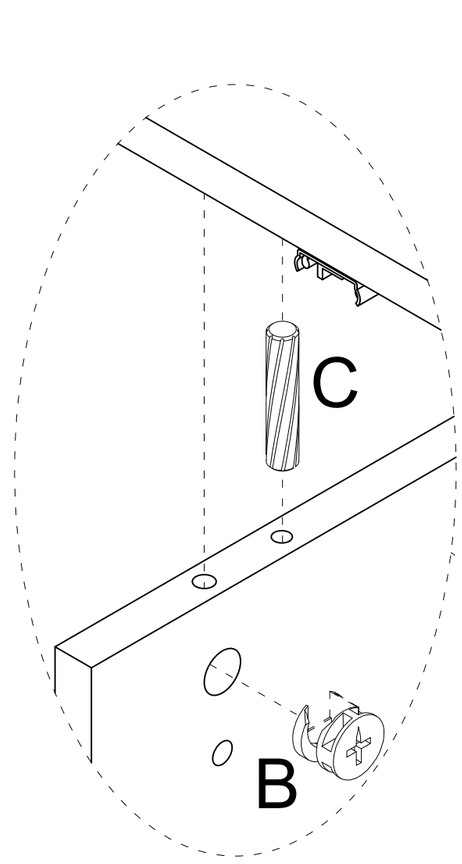

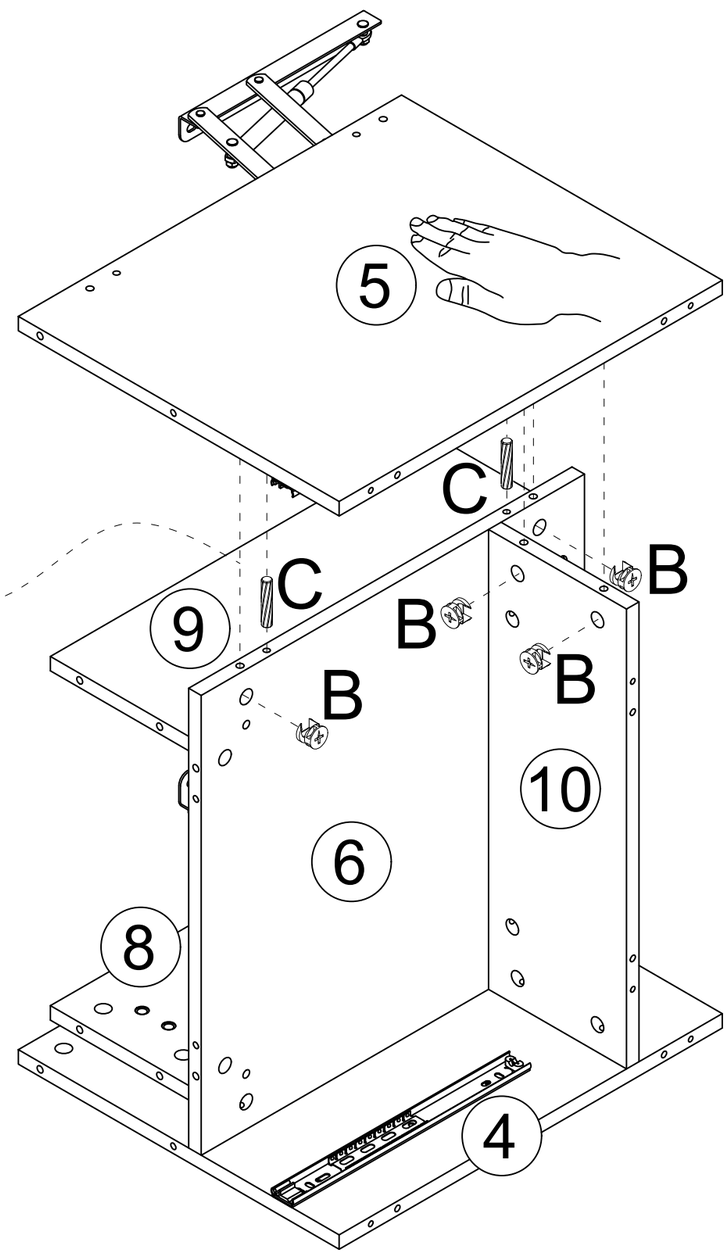

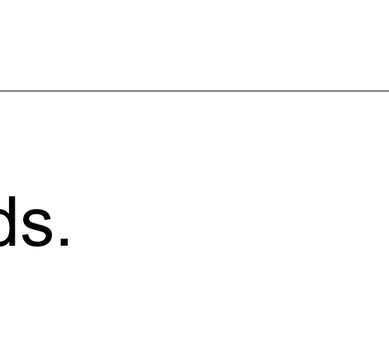

B x4



Ø15*10mm

C x2



Ø6*30mm

Connect Right Side Panel(5) with Dowel(C) and then lock Cam Nut(B) .

STEP 12

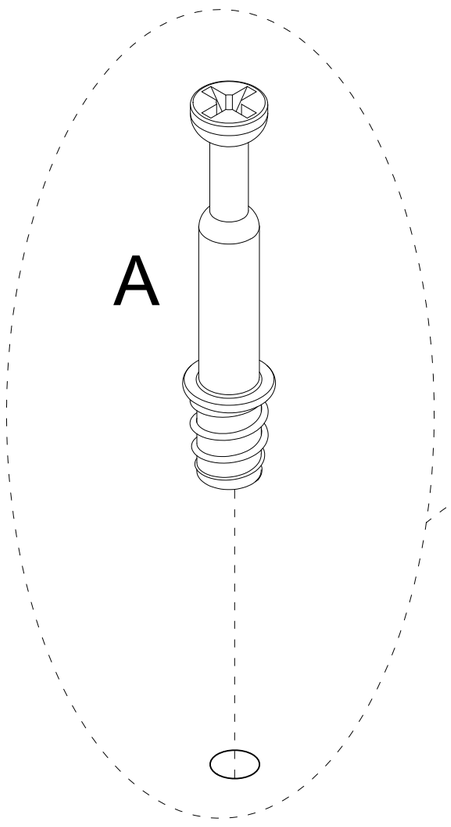

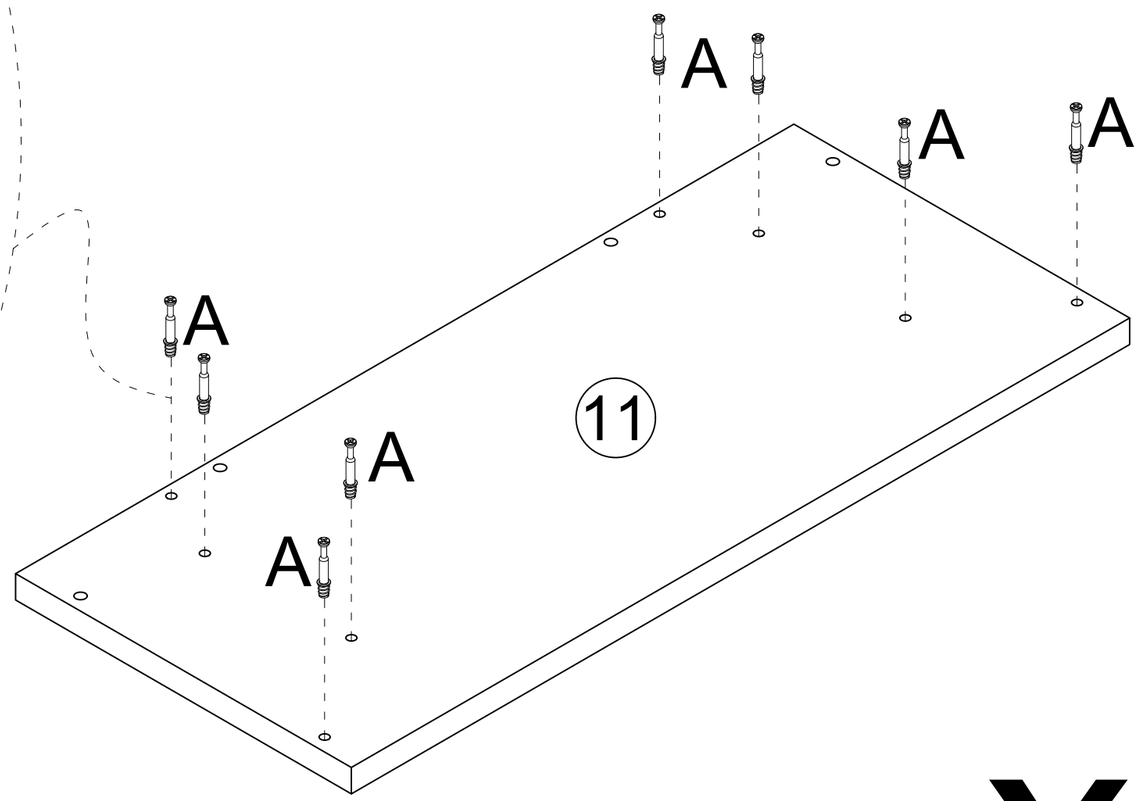

x2

A x16

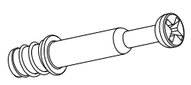

Ø6*35mm

On Bolt (A) Dummy Drawer Panel(11) ,Repeat the above steps twice

STEP 13

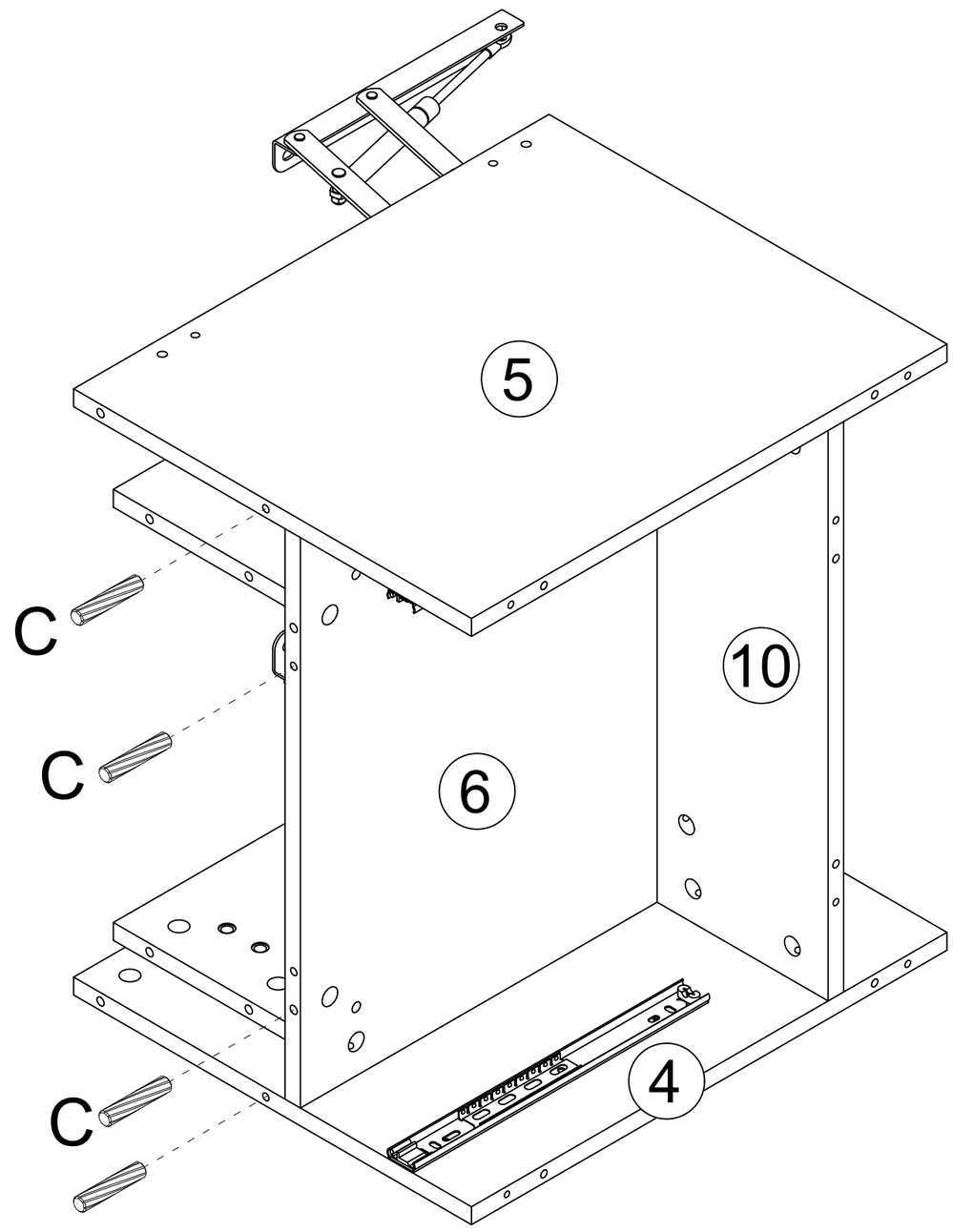

Cx4



Ø6*30mm

Place Dowel(C) into the correct hole position.

STEP 14

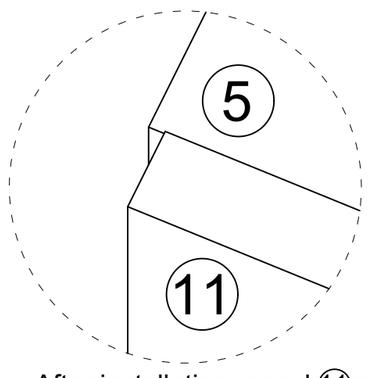

After installation, panel ⑪ will be lower than panels ⑤ and ④ by a certain amount.

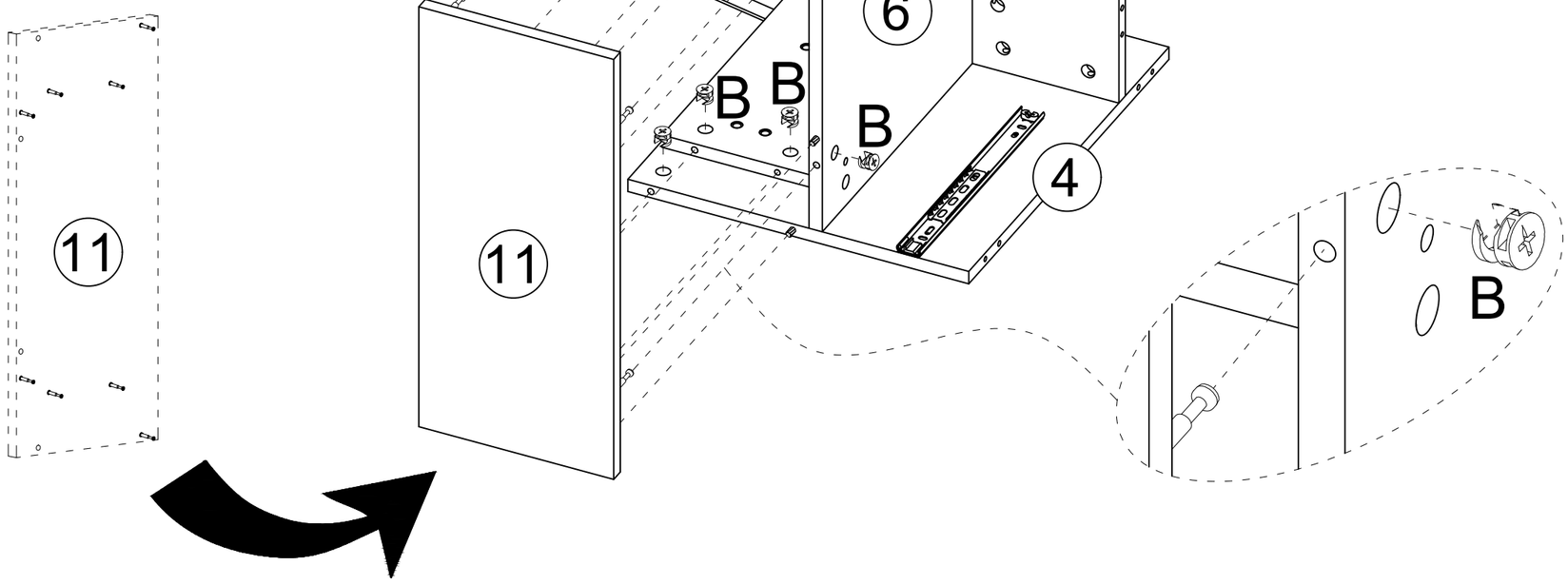

Bx8



Ø15*10mm

Align Dummy Drawer Panel(⑪) precisely to the correct hole position and press it tightly, then lock Cam Nut(B).

STEP 15

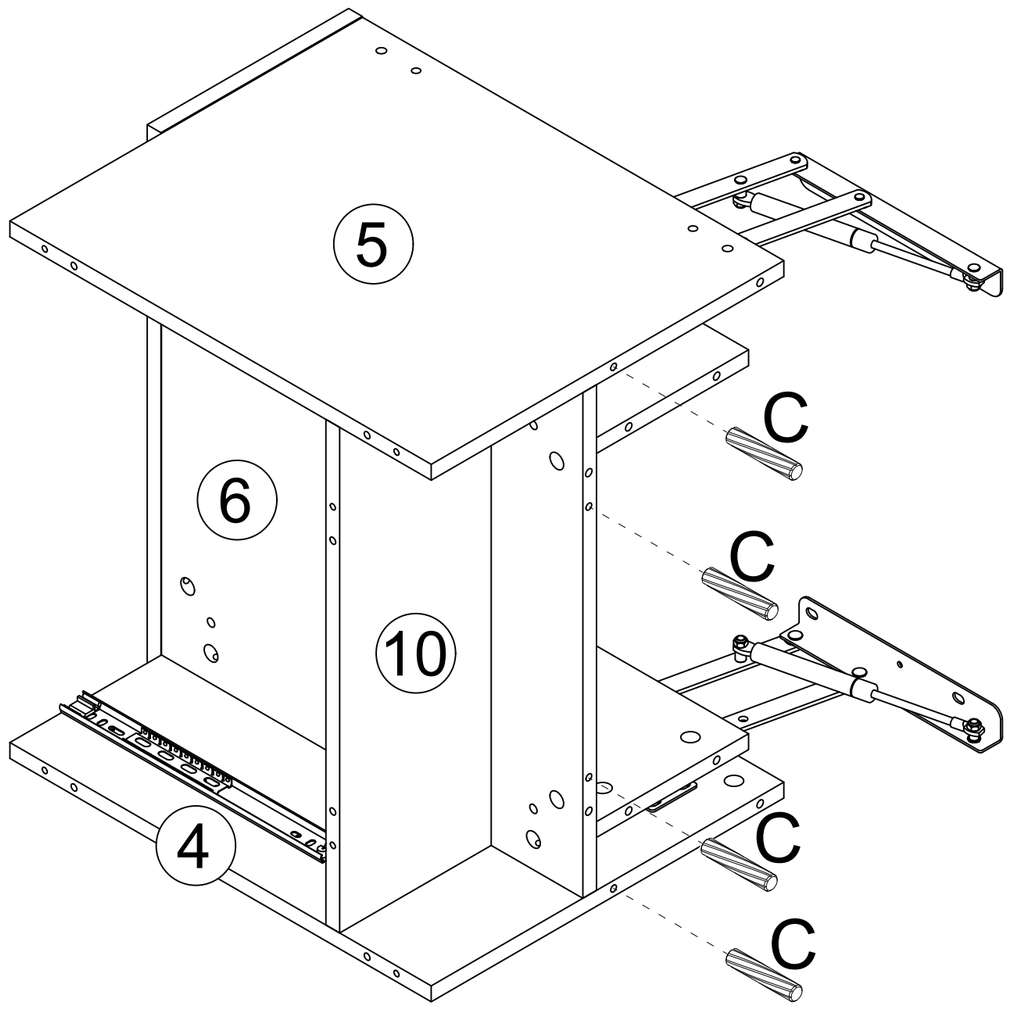

Cx4



Ø6*30mm

Place Dowel(C) into the correct hole position.

STEP 16

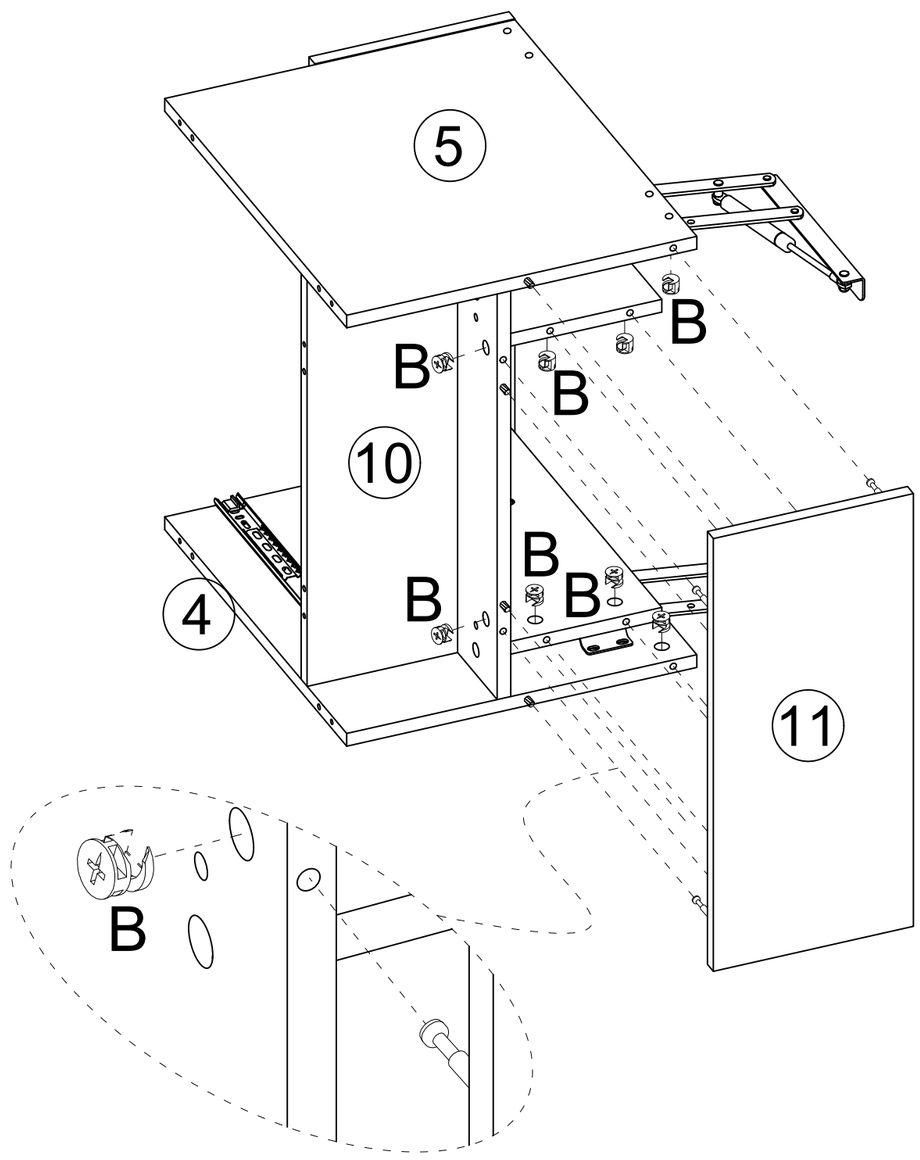

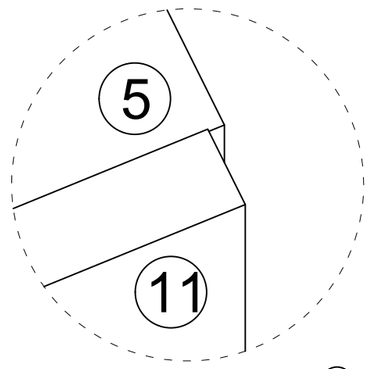

After installation, panel (11) will be lower than panels (5) and (4) by a certain amount.

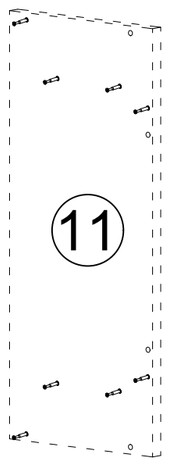

Bx8



Ø15*10mm

Align Dummy Drawer Panel((11)) precisely to the correct hole position and press it tightly, then lock Cam Nut(B) .

STEP 17

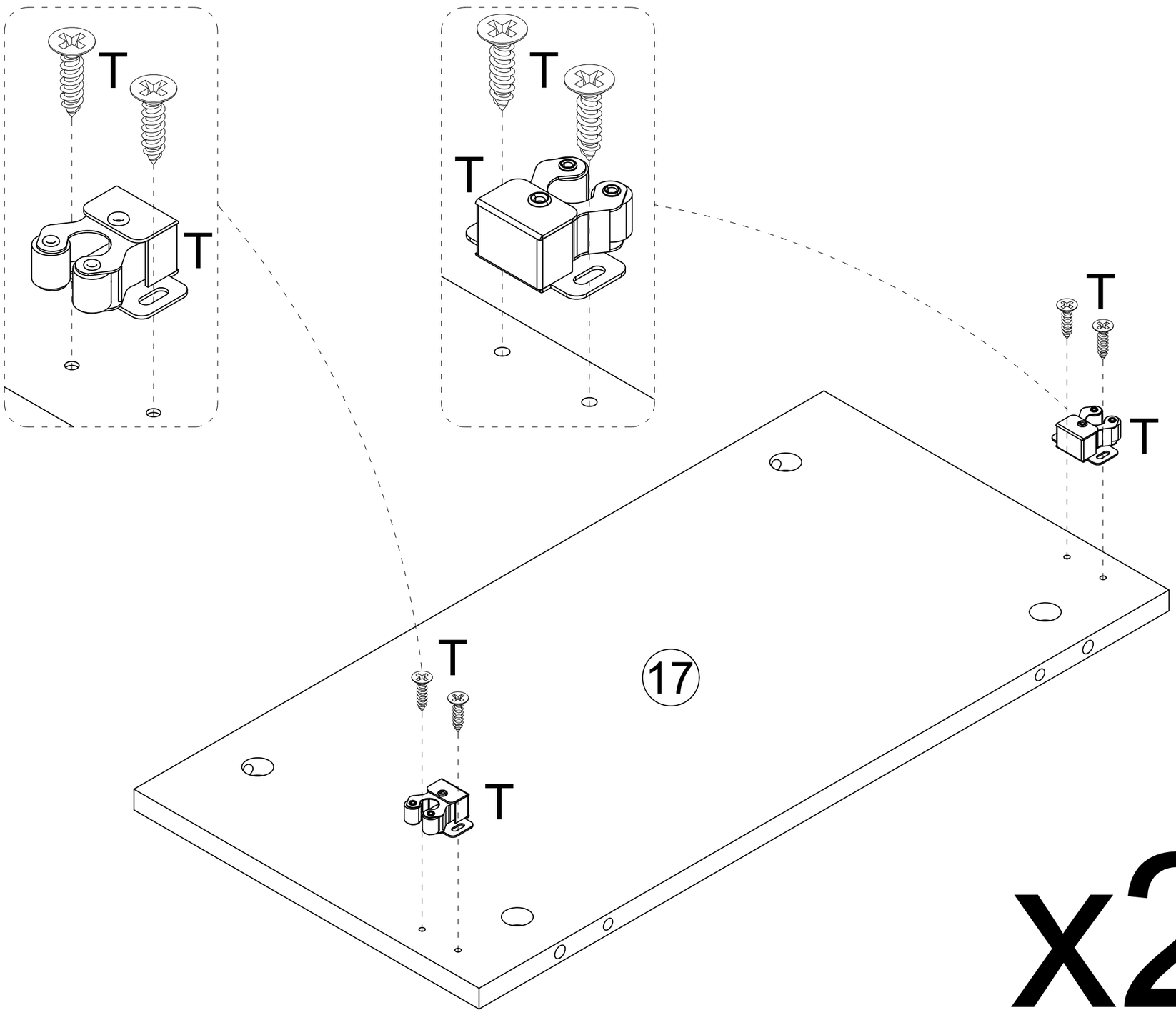

T x4

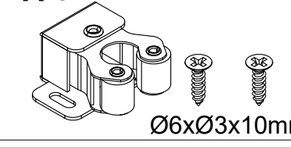

securely fasten and Pinball lever mechanism (T) onto Left/Right Roof Panel(17).

STEP 18

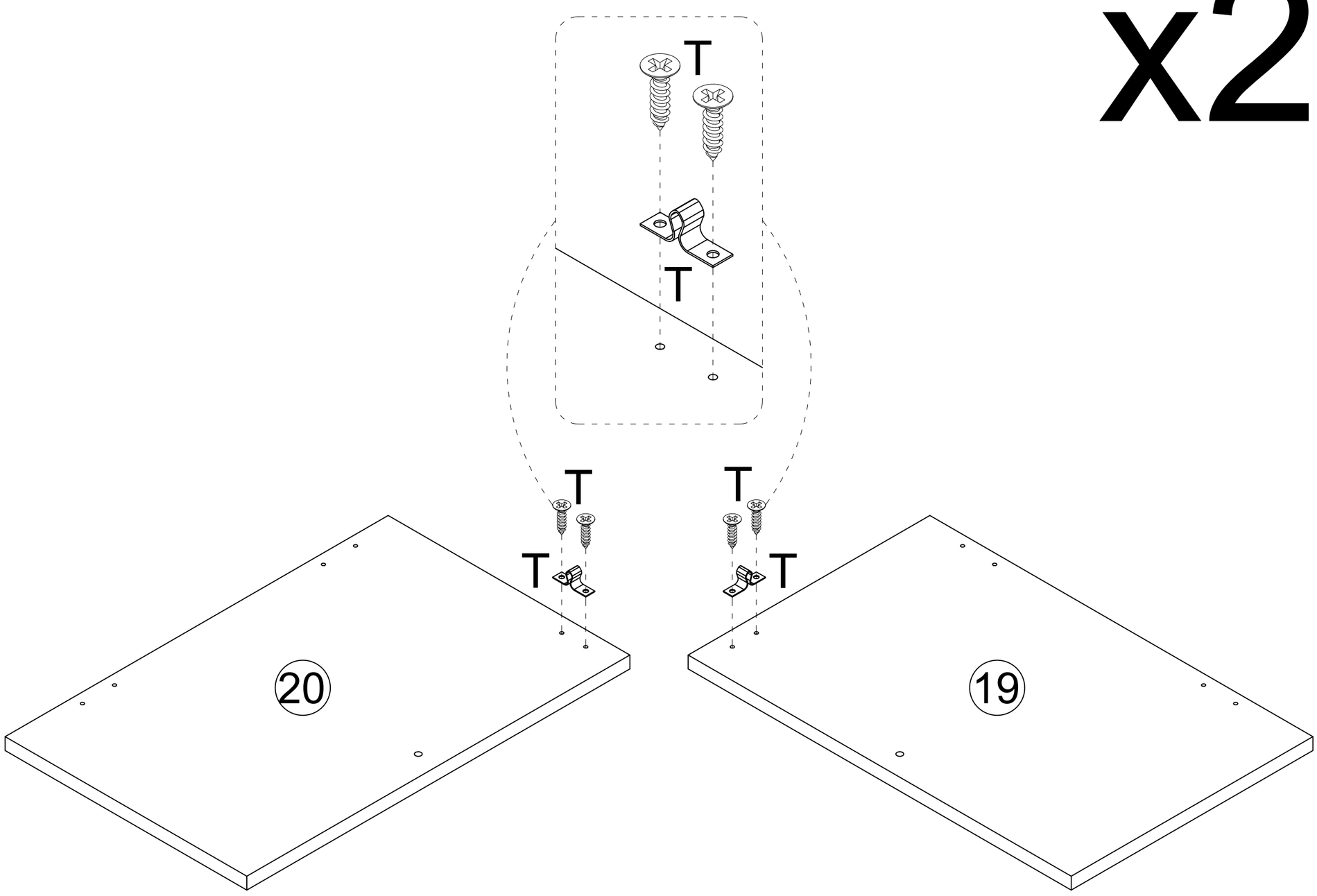

T x4

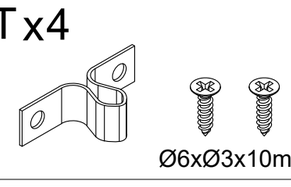

securely fasten and Pinball lever mechanism (T) onto Left door panel(19) and Right door panel(20).

STEP 19

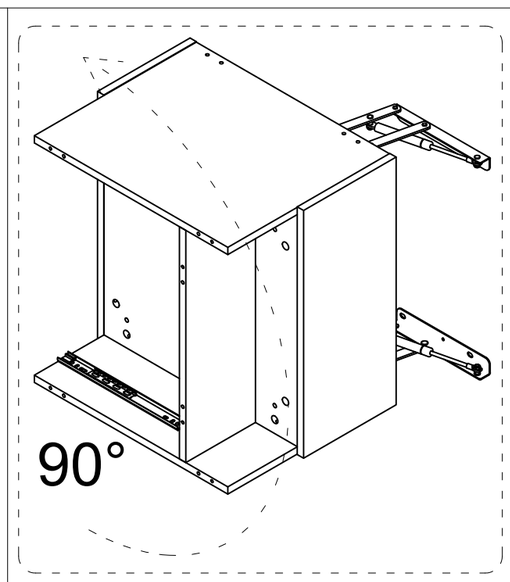

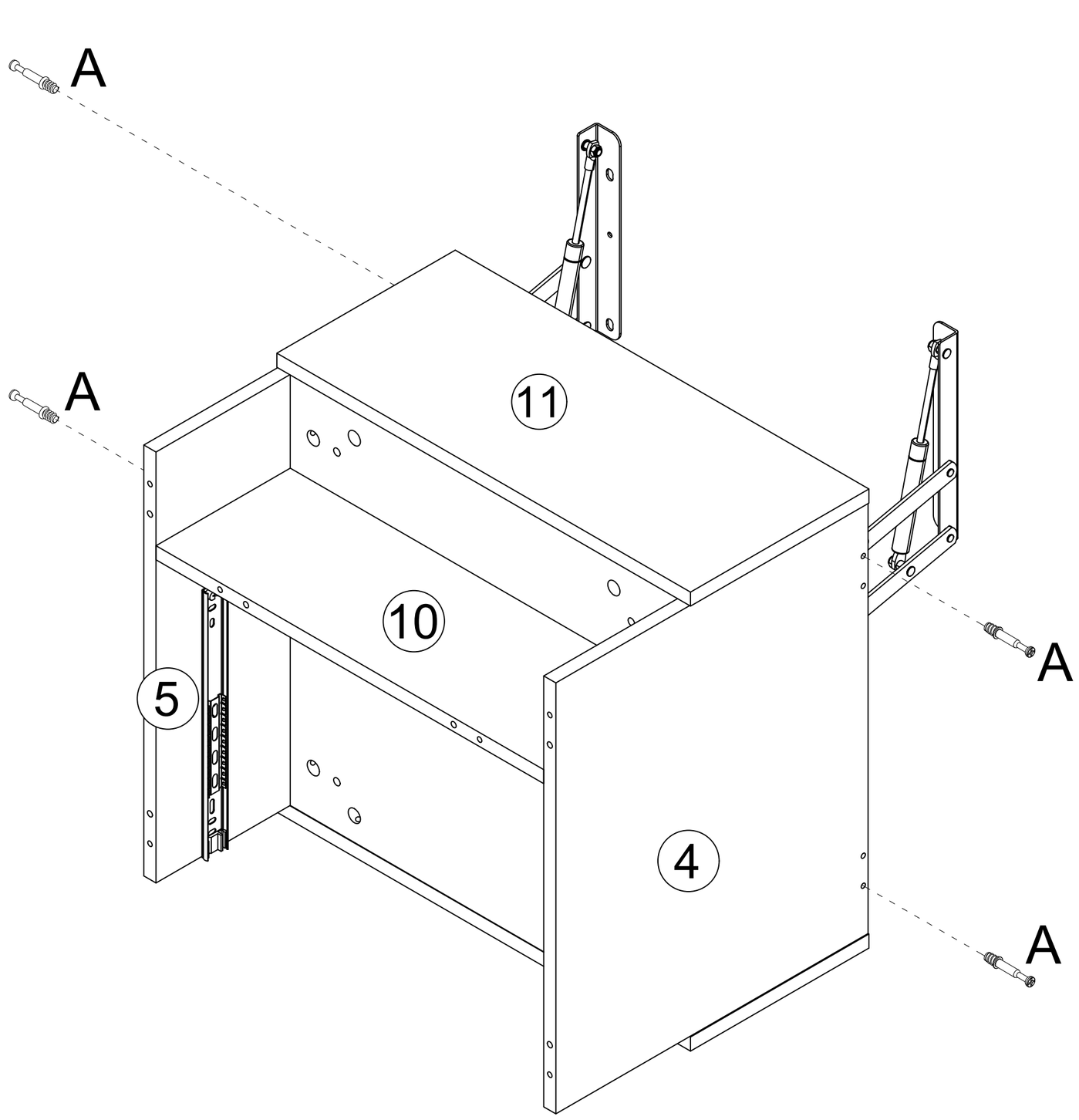

A x4

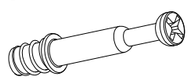

Ø6*35mm

Lock Cam Bolt(A) on to Left Side Panel(4) and Right Side Panel(5).

STEP 20

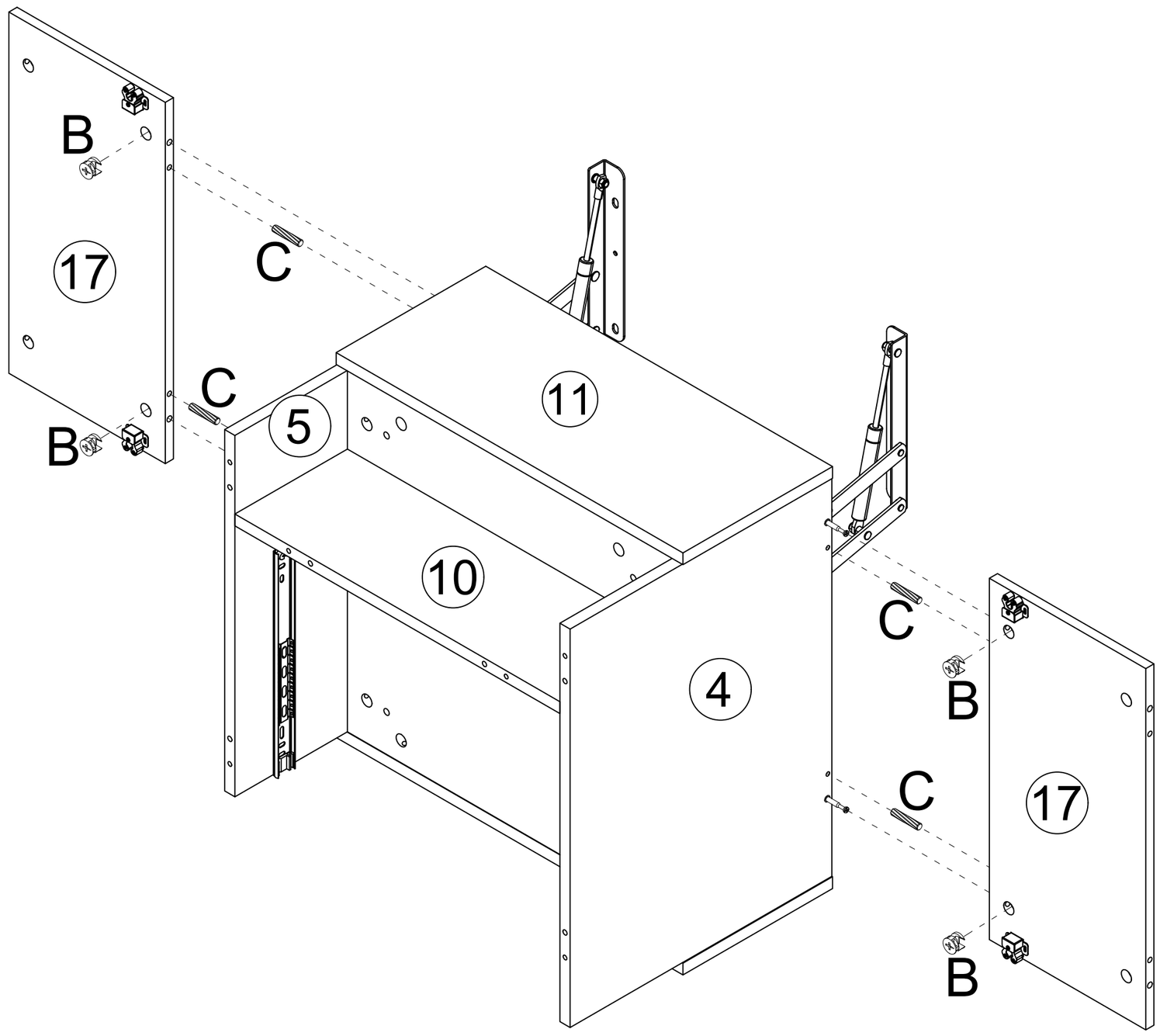

B x4



Ø15*10mm

C x4



Ø6*30mm

Connect Left Side Panel(4) ,and Right Side Panel(5) , and Left/Right Roof Panel(17) ,with Dowel(C), and then lock Cam Nut(B).

STEP 21

x2

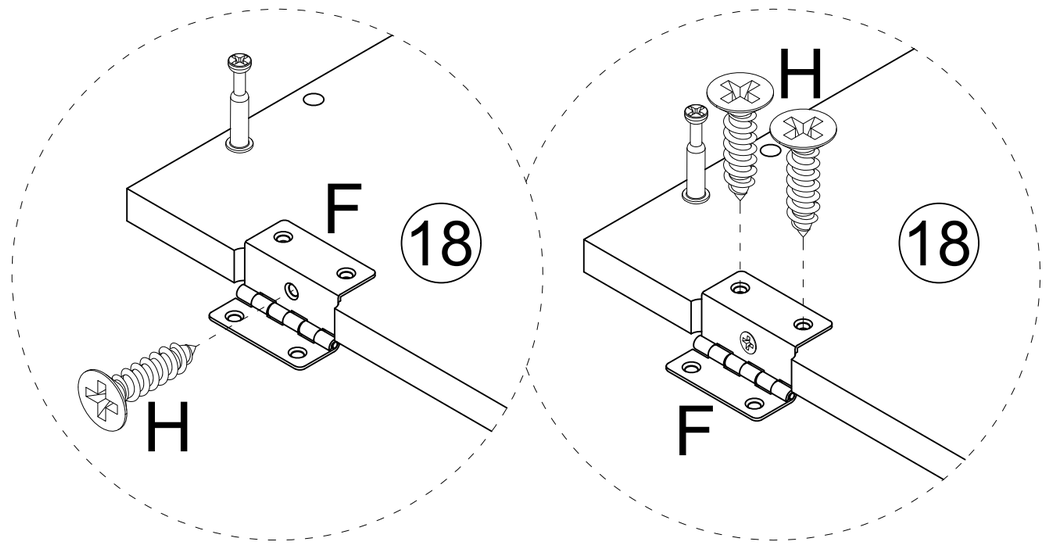

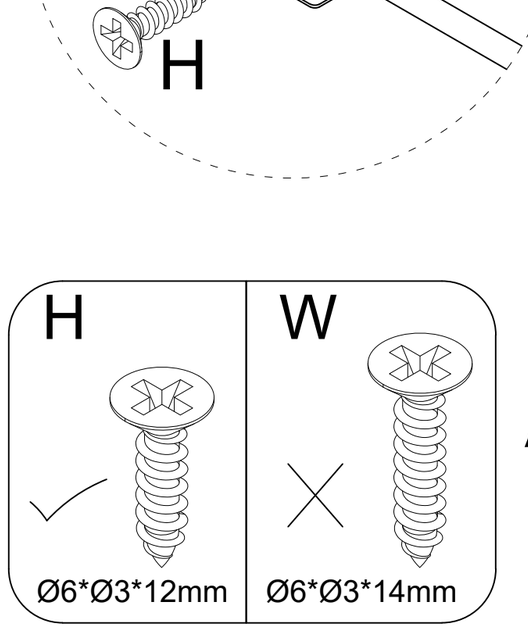

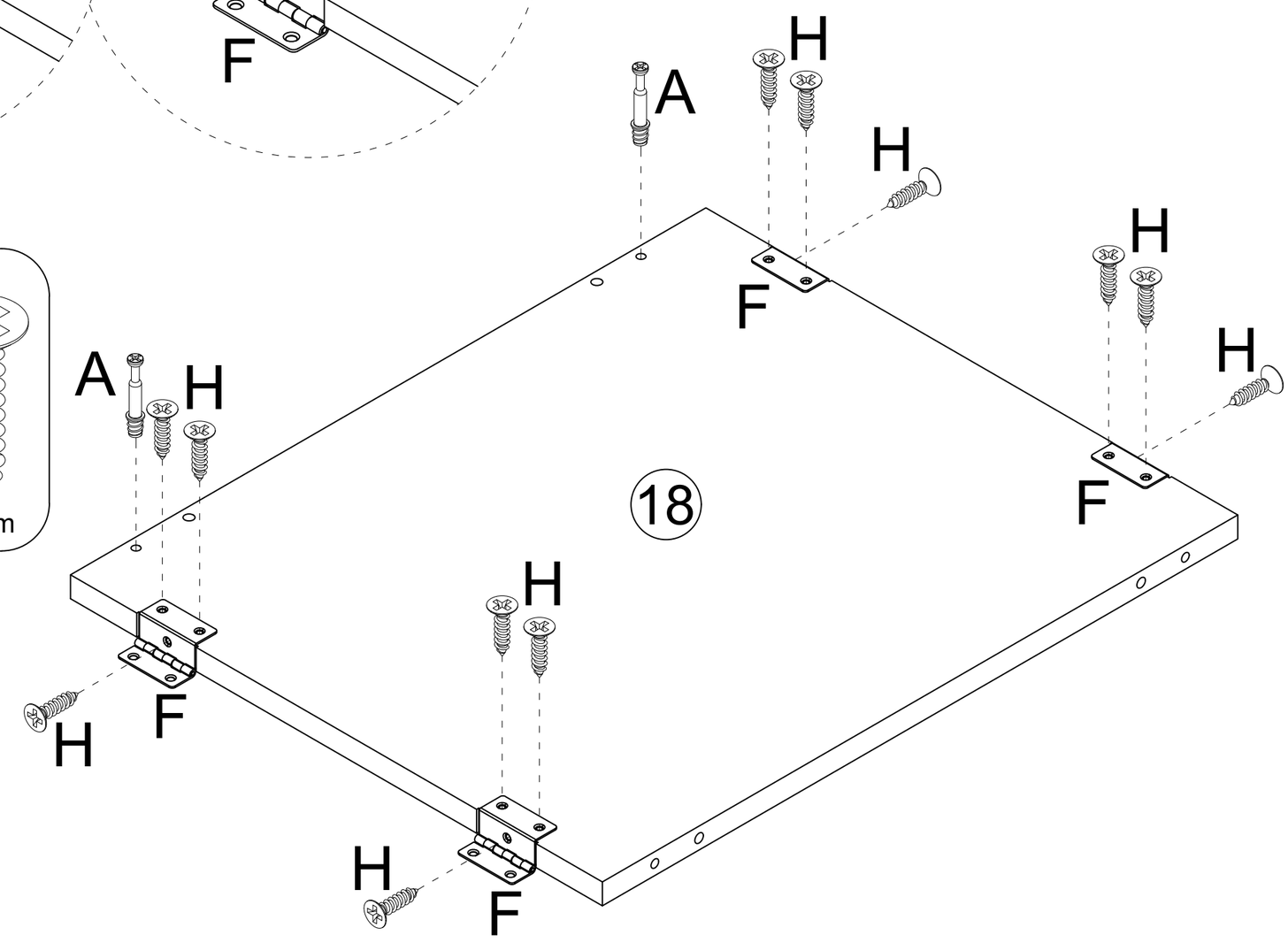

F x8

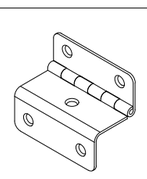

Hx24

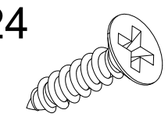

Ø6*Ø3*12mm

Ax4

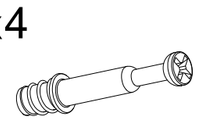

Ø6*35mm

Use Screw(H) to securely fasten and Three-Fold Hinge (F) Lock Cam Bolt(A) on to Outer left/right panel(18).

STEP 22

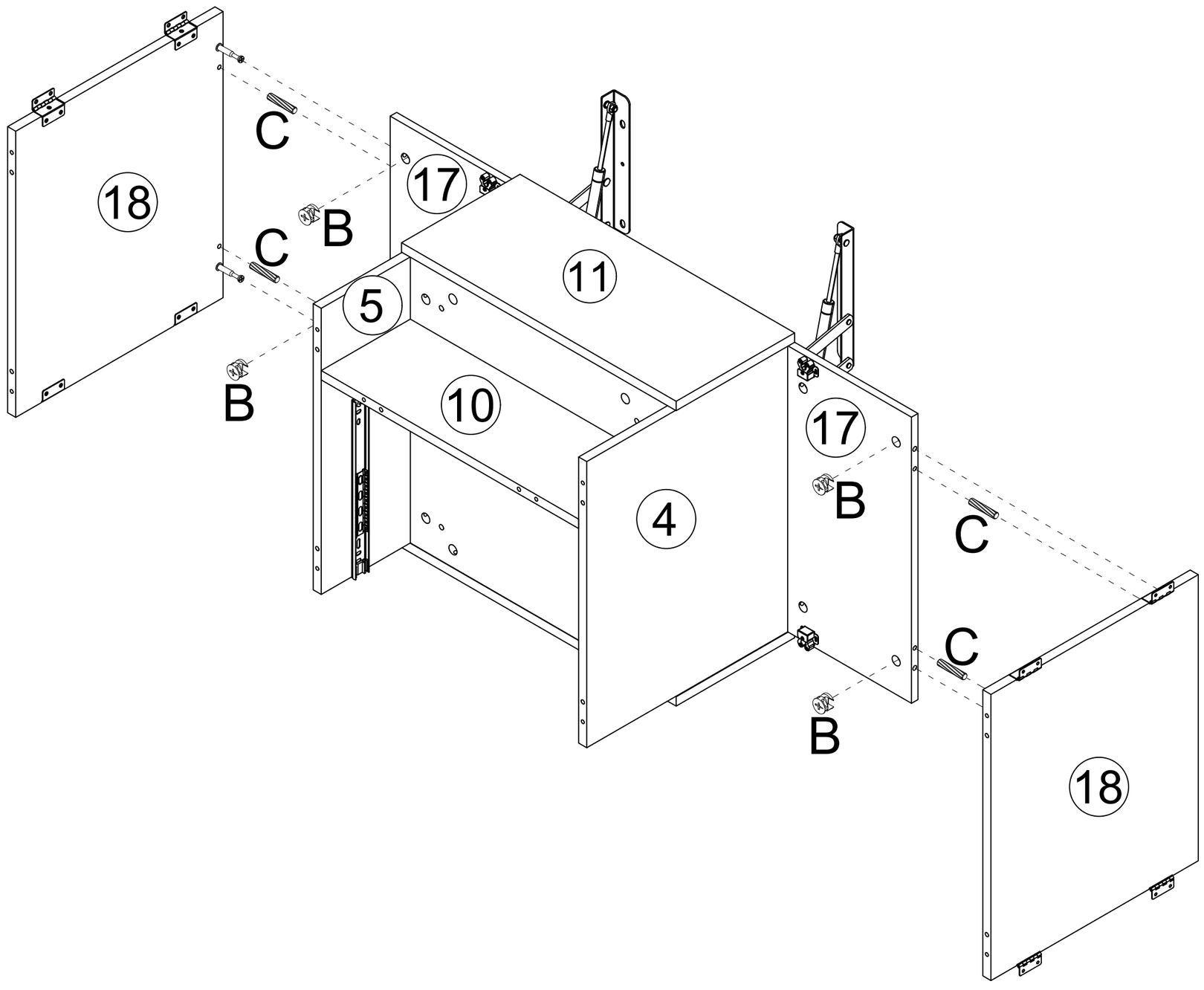

Bx4



Ø15*10mm

Cx4



Ø6*30mm

Connect Outer left/right panel(18) ,and Left/Right Roof Panel(17),with Dowel(C), and then lock Cam Nut(B).

STEP 23

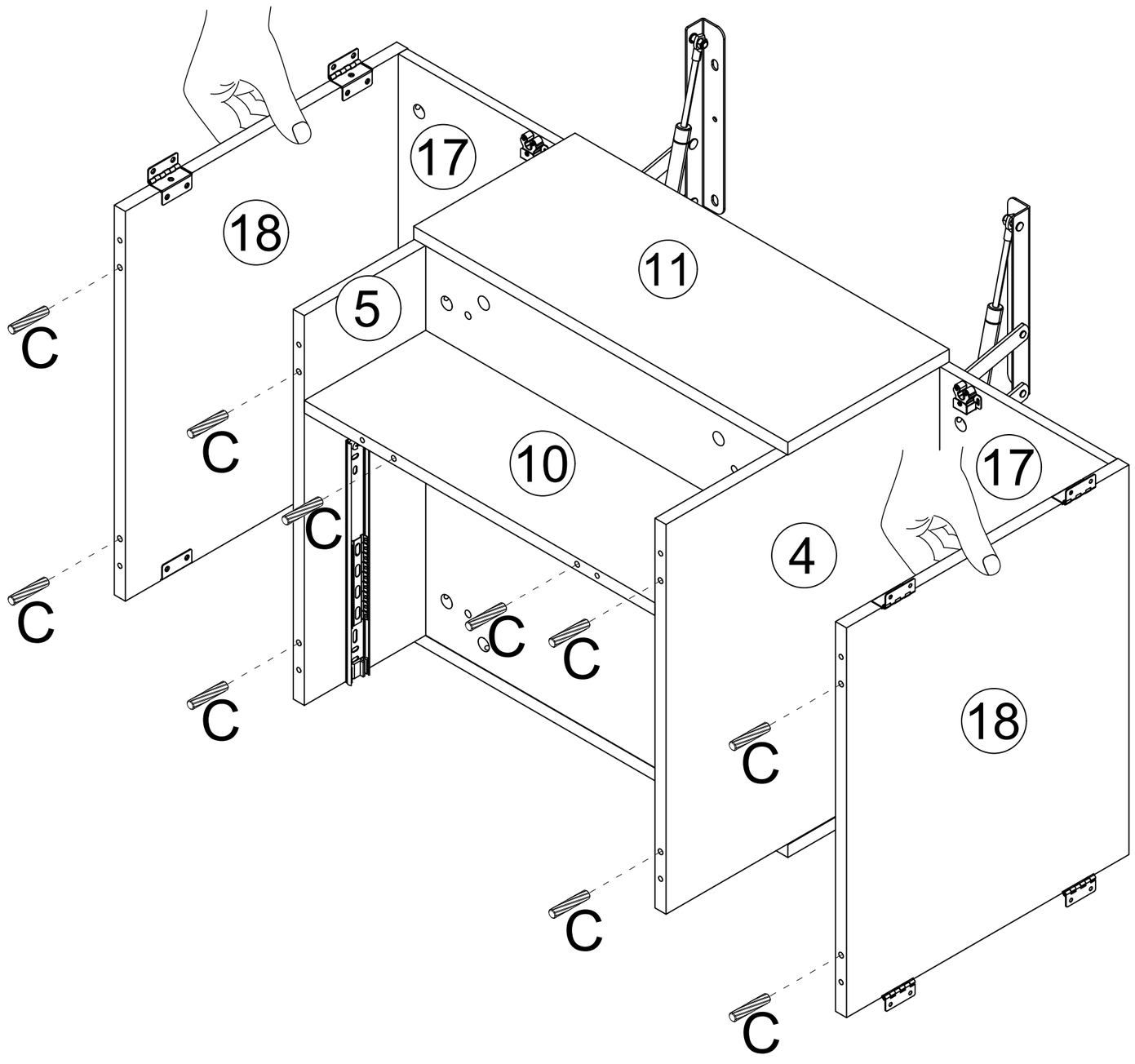

Cx10



Ø6*30mm

Place Dowel(C)into the correct hole position.Attention Outer left/right panel(18) ,and Left/Right Roof Panel(17),be sure to perform the action gently to avoid damaging the component .

STEP 24

When installing, slightly lift the cabinet and align Dowel C into the hole of panel③

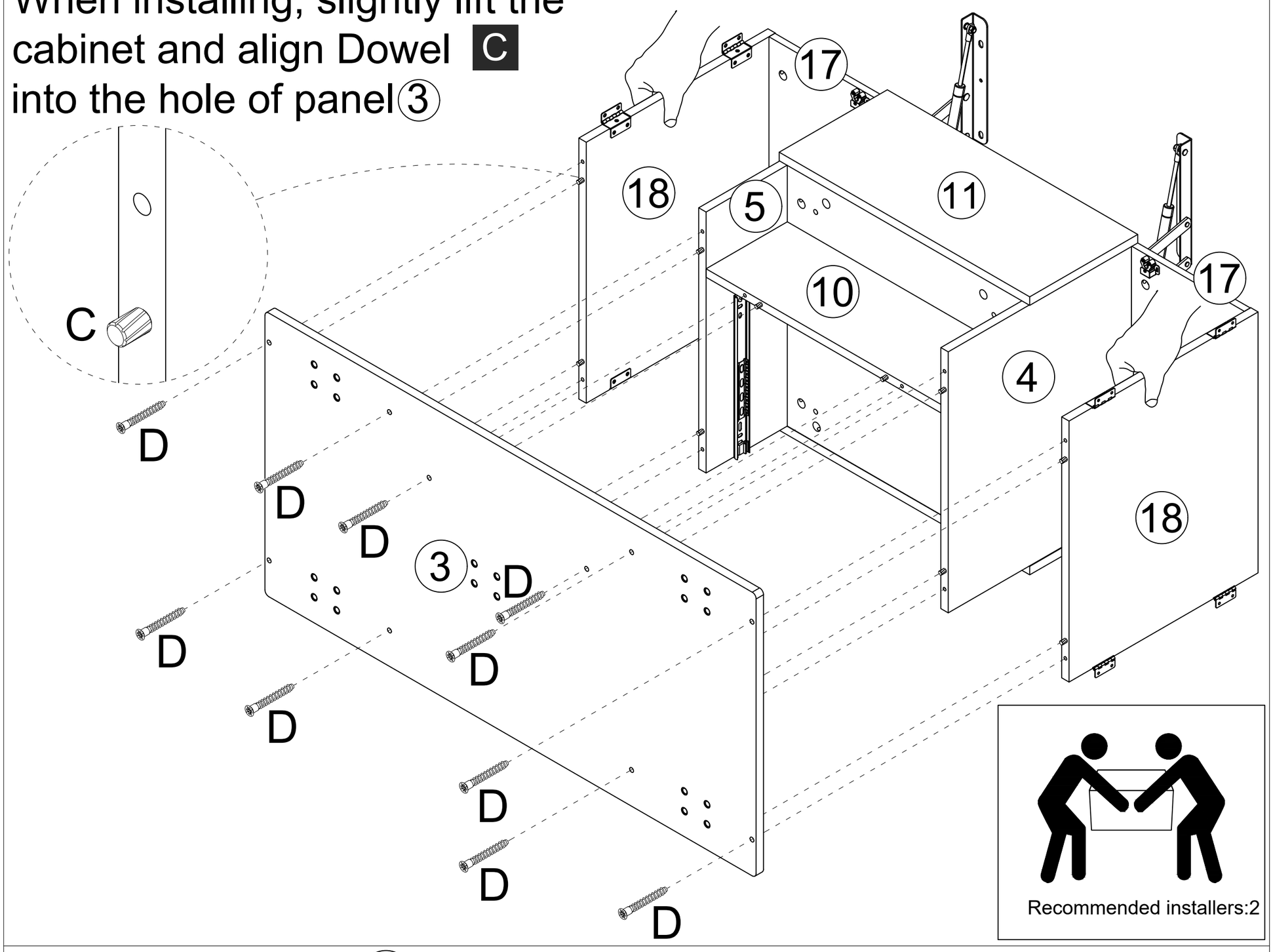

Dx10



Ø7*38mm

Align Base Plate(3)precisely to the correct hole position and press it tightly, then lock Screw(D).

STEP 25

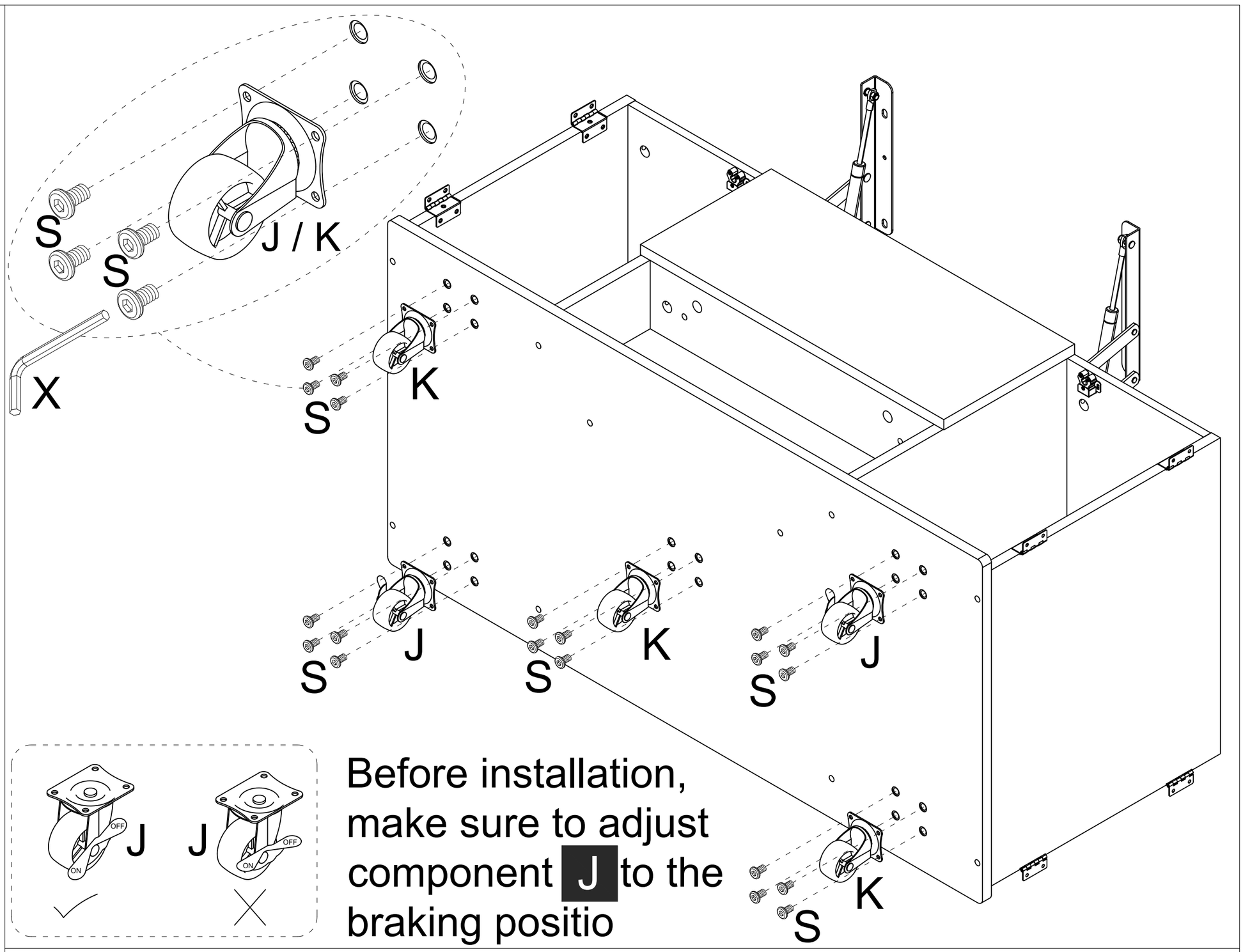

Xx1

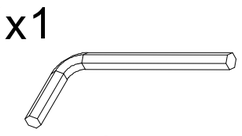

4mm

Jx2

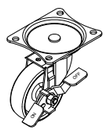

Kx3

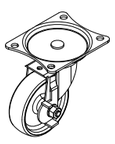

Sx20



M6*10mm

Before installation, make sure to adjust component **J** to the braking positio

On use Bolt(S) to securely fasten and fix Swivel Wheels(J) and (K) Base Plate(③).

STEP 26

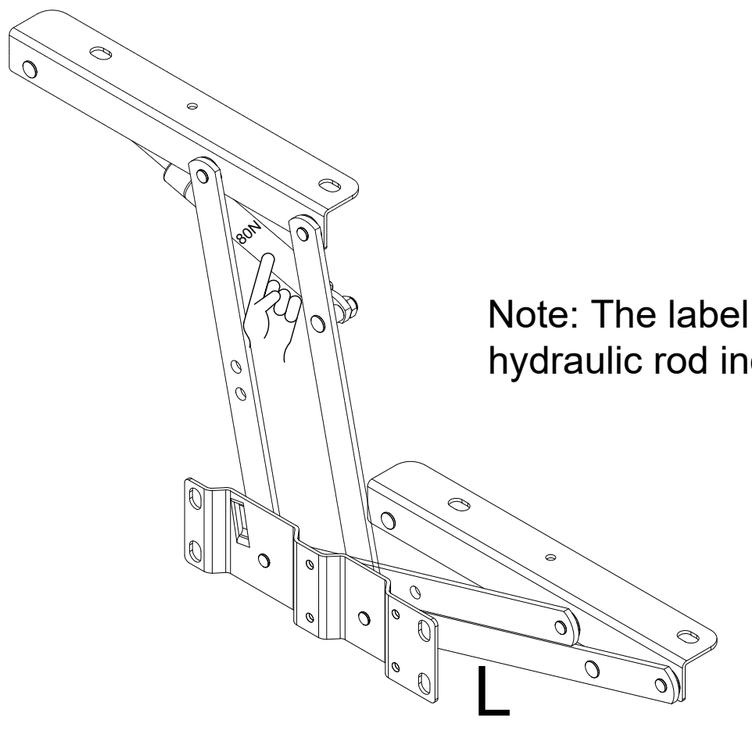

Note: The label on the hydraulic rod indicates 80 N.

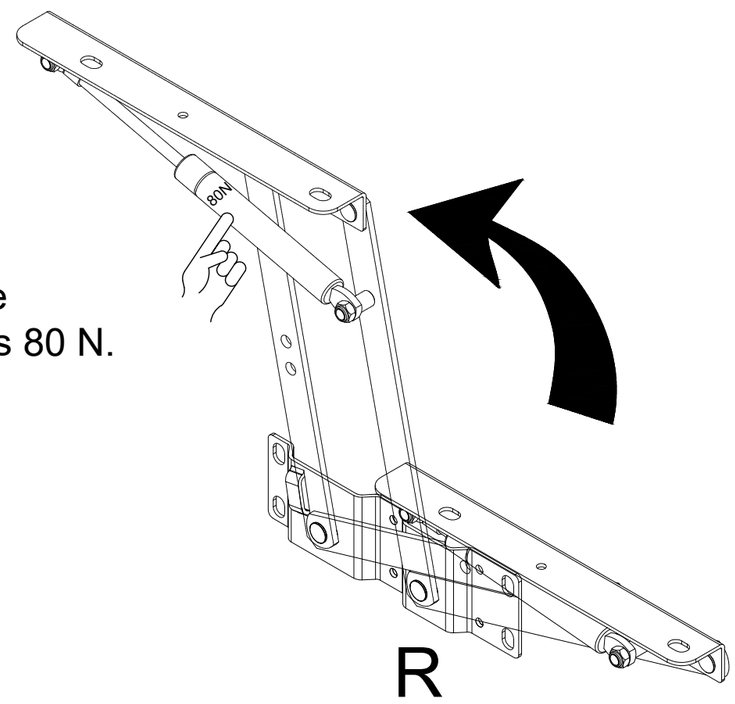

Lx1

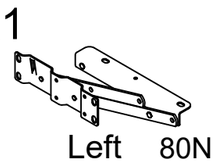

Left 80N

Rx1

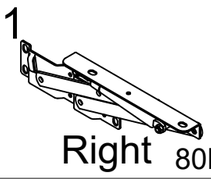

Right 80N

Open the Lift Mechanism(L)and(R)

STEP 27

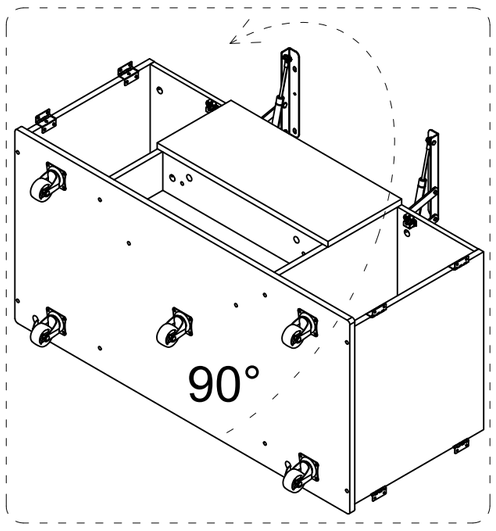

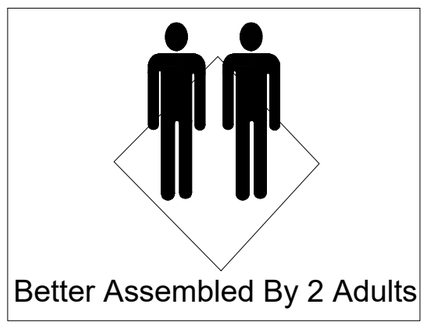

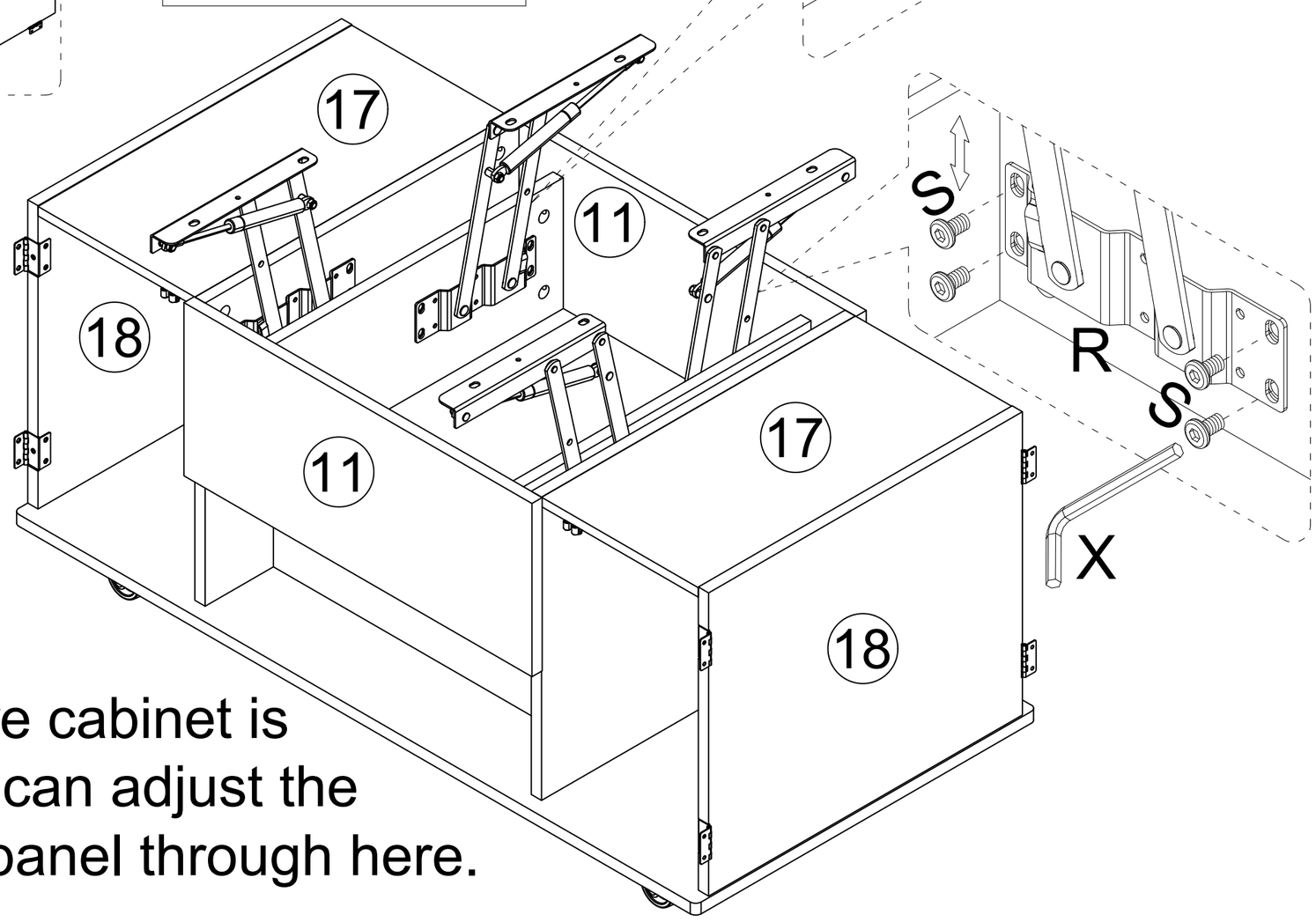

After the entire cabinet is installed, you can adjust the height of the panel through here.

Xx1

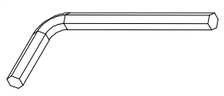

4mm

Sx8



M6*10mm

Use Bolt(S) to securely fasten and fix Lift Mechanism(L) and (R) onto the corresponding plates.

STEP 28

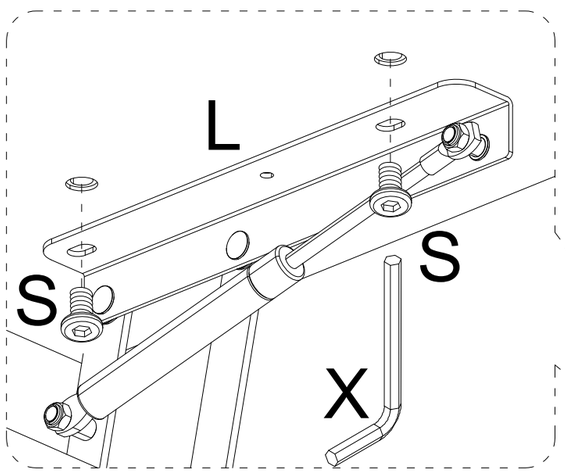

Pay attention to differentiating directions based on the distance between the hole positions.

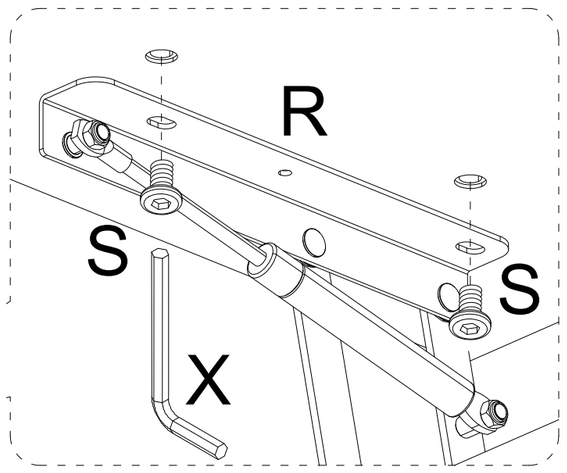

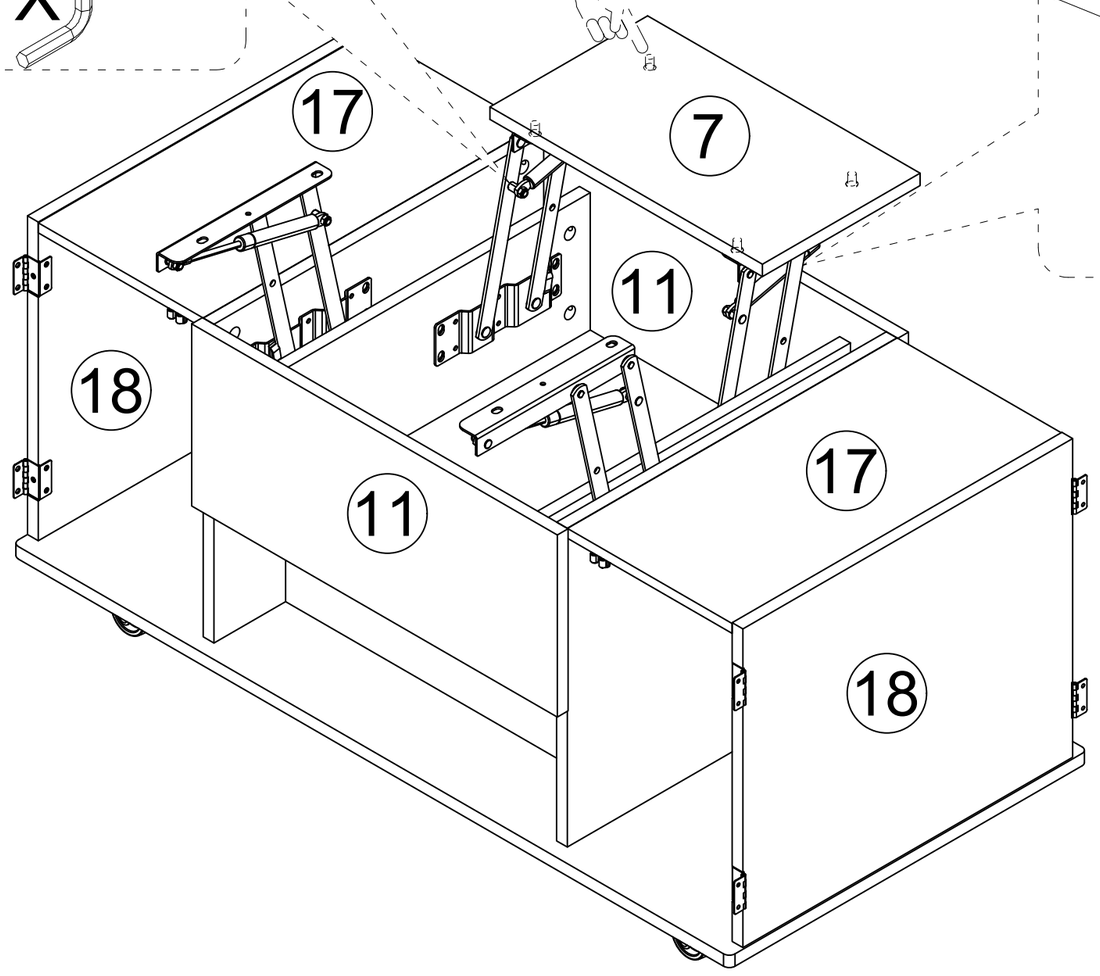

Xx1

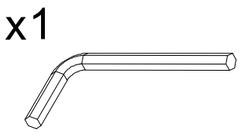

4mm

Sx4



M6*10mm

Use Bolt(S)to securely fasten and fix Inner Panel(7)onto Lift Mechanism(L)and(R).

STEP 29

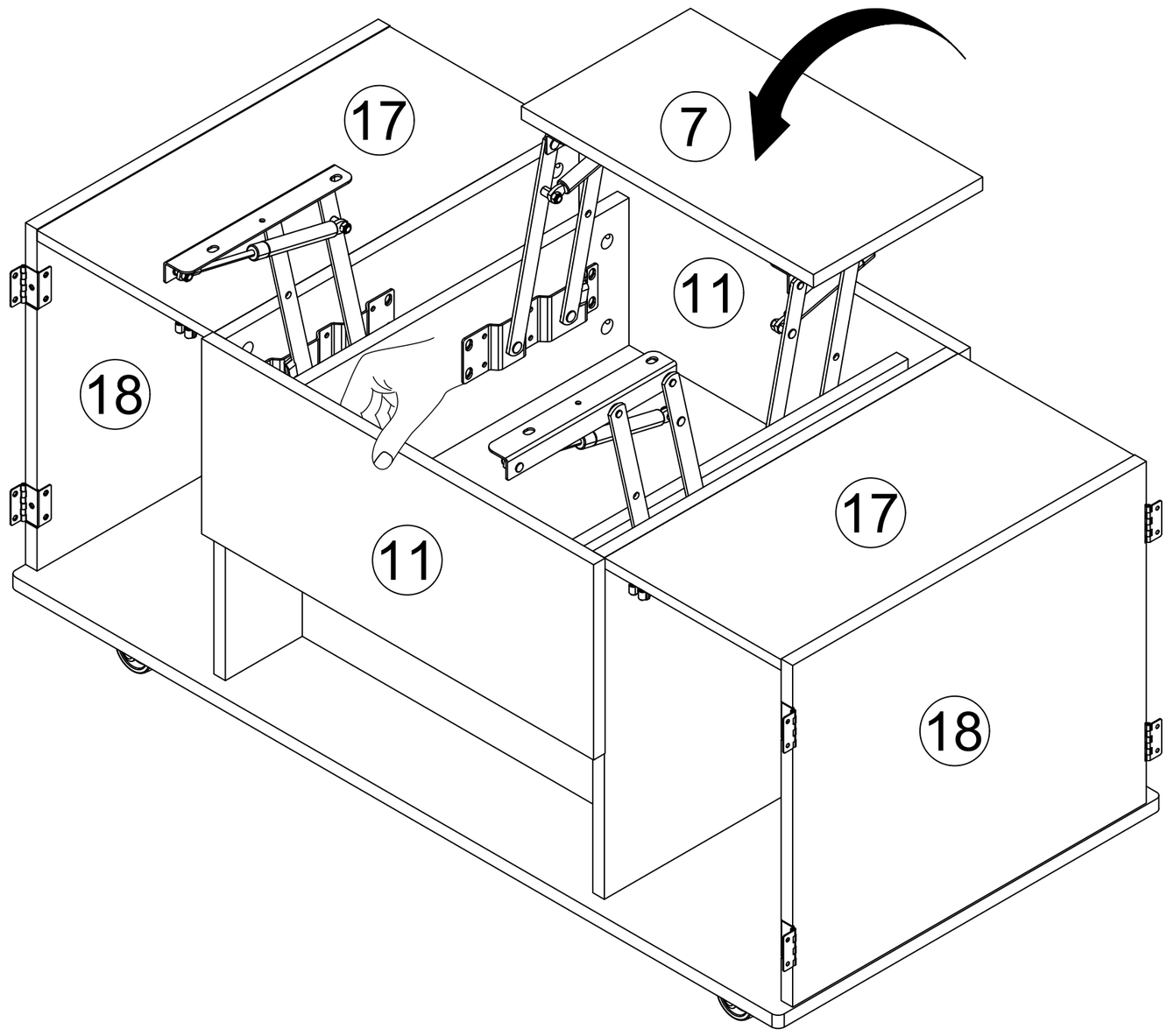

Hold down the Dummy Drawer Panel(11) panel to prevent the cabinet from moving, and then place the Inner Panel(7) panel down.

STEP 30

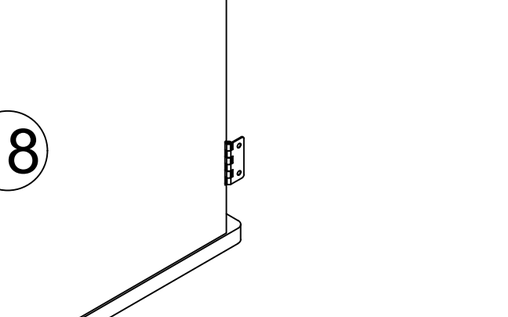

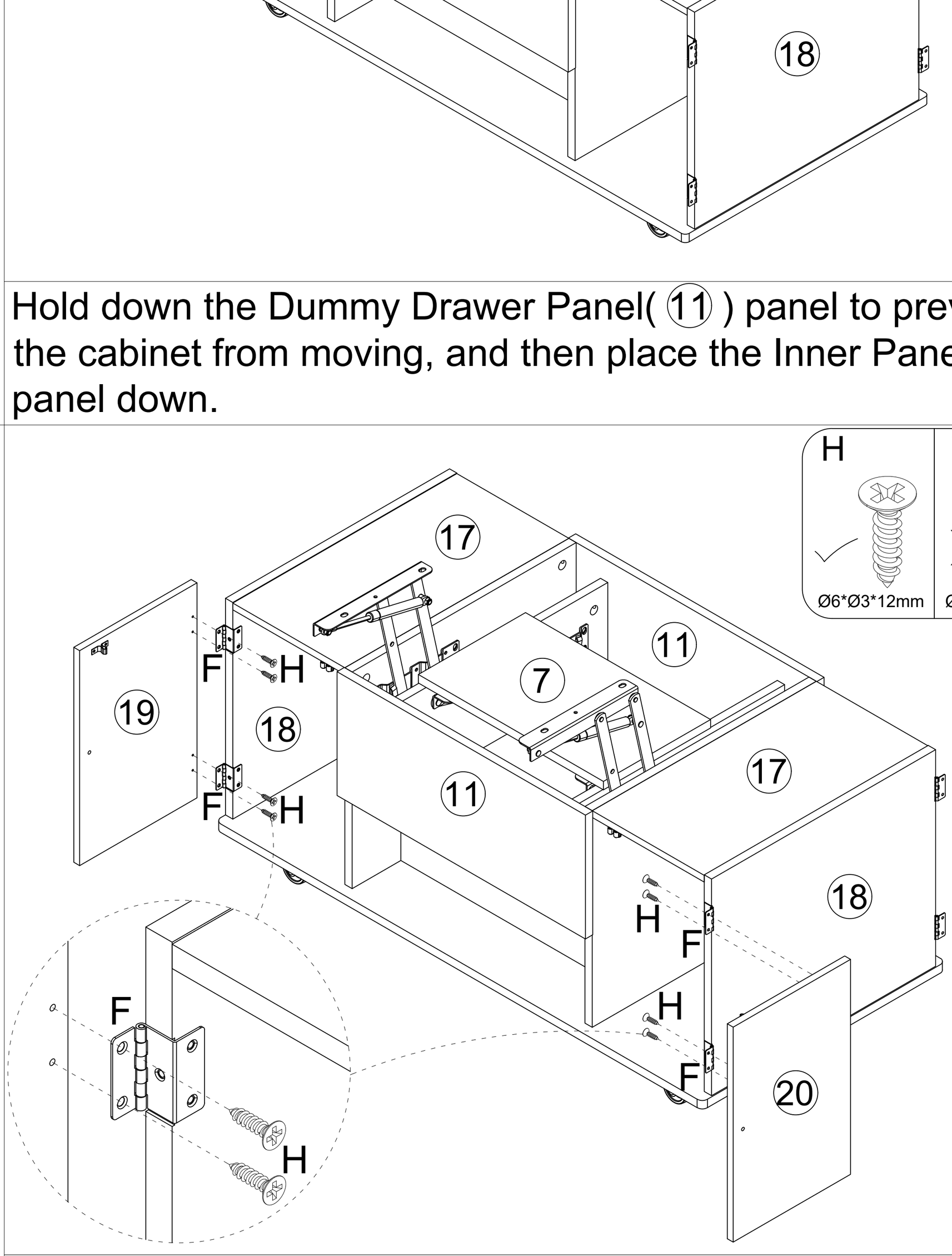

Hx8

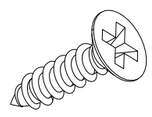

Ø6*Ø3*12mm

Use Screw(H) to securely fasten and Three-Fold Hinge (F) onto Left door panel(19) and Right door panel(20).

STEP 31

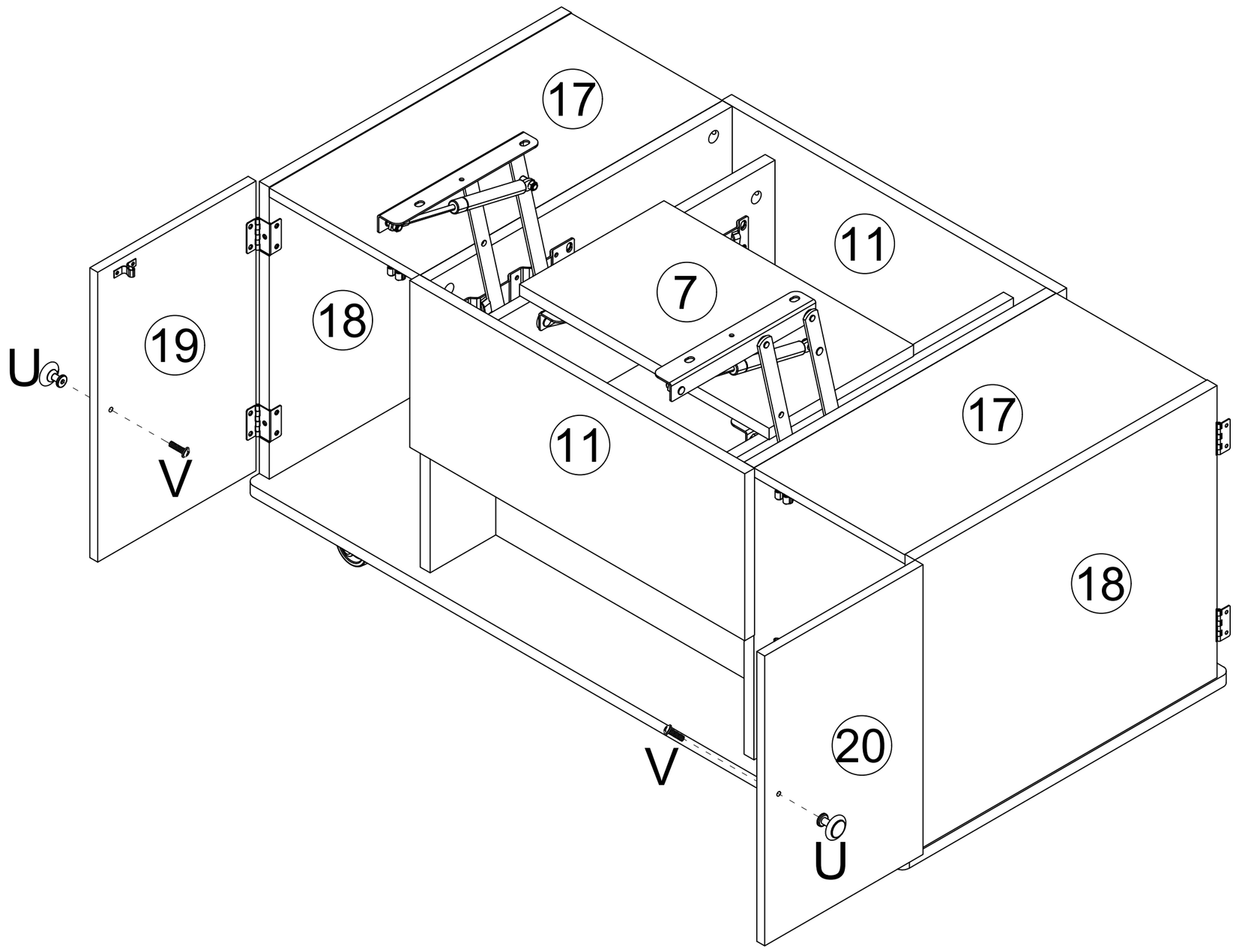

Vx2

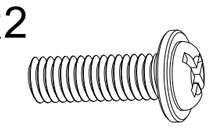

M4*16mm

Ux2

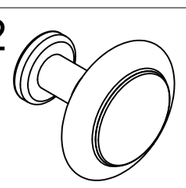

Use Screw(V) to securely fasten and Pull handle (U) onto Left door panel(19) and Right door panel(20).

STEP 32

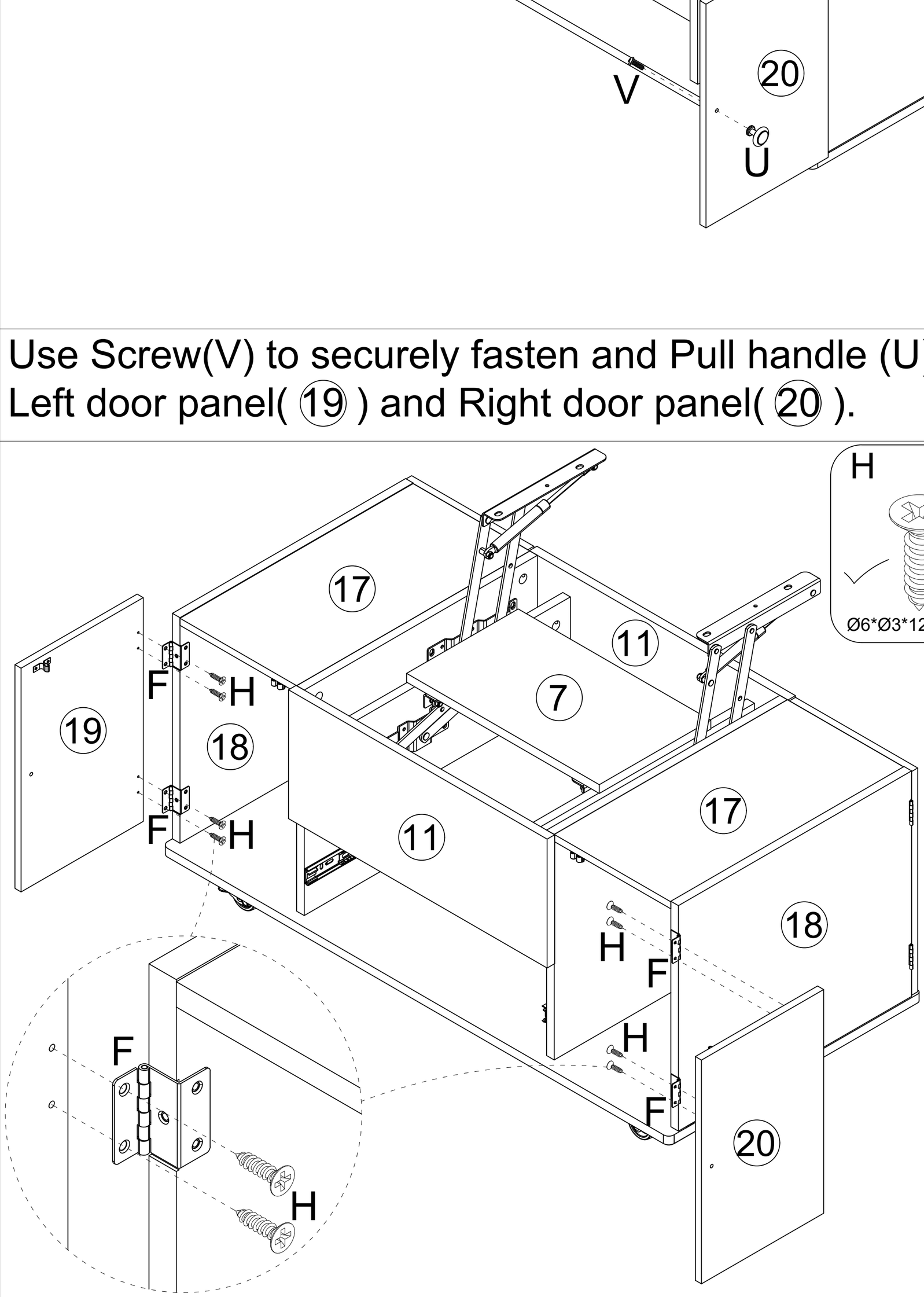

Hx8

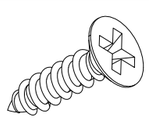

Ø6*Ø3*12mm

Use Screw(H) to securely fasten and Three-Fold Hinge (F) onto Left door panel(19) and Right door panel(20).

STEP 33

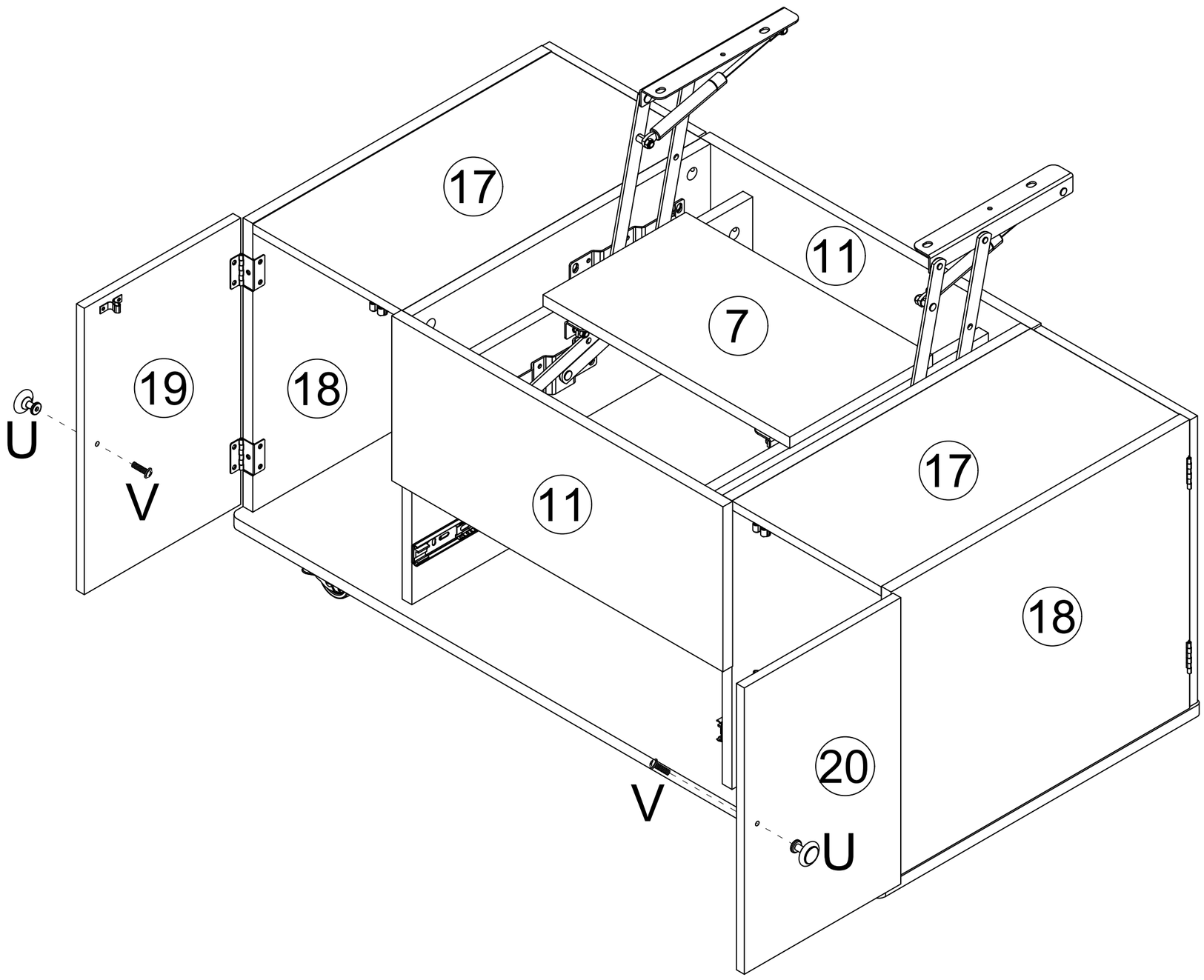

Vx2

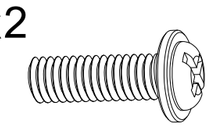

M4*16mm

Ux2

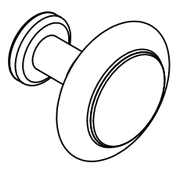

4

Use Screw(V) to securely fasten and Pull handle (U) onto Left door panel(19) and Right door panel(20).

STEP 34

O	Q
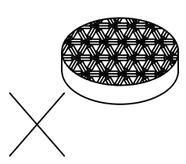	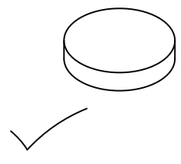
Ø15*3mm	Ø15*3mm

Component(Q)should be adhered to the boards(4)and(5).

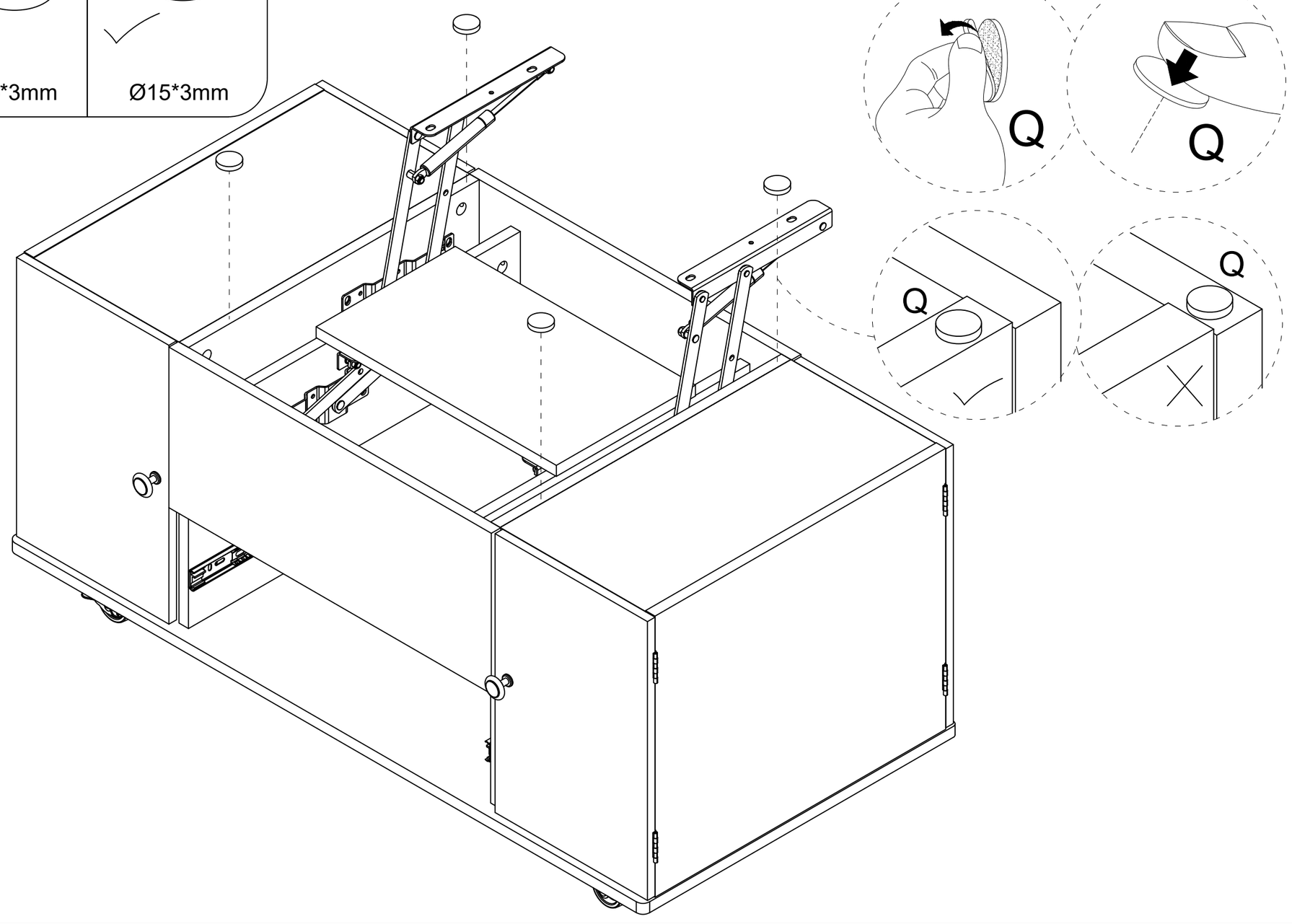

Qx4

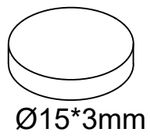

Ø15*3mm

Attach Pad(Q) to the corresponding position.

STEP 35

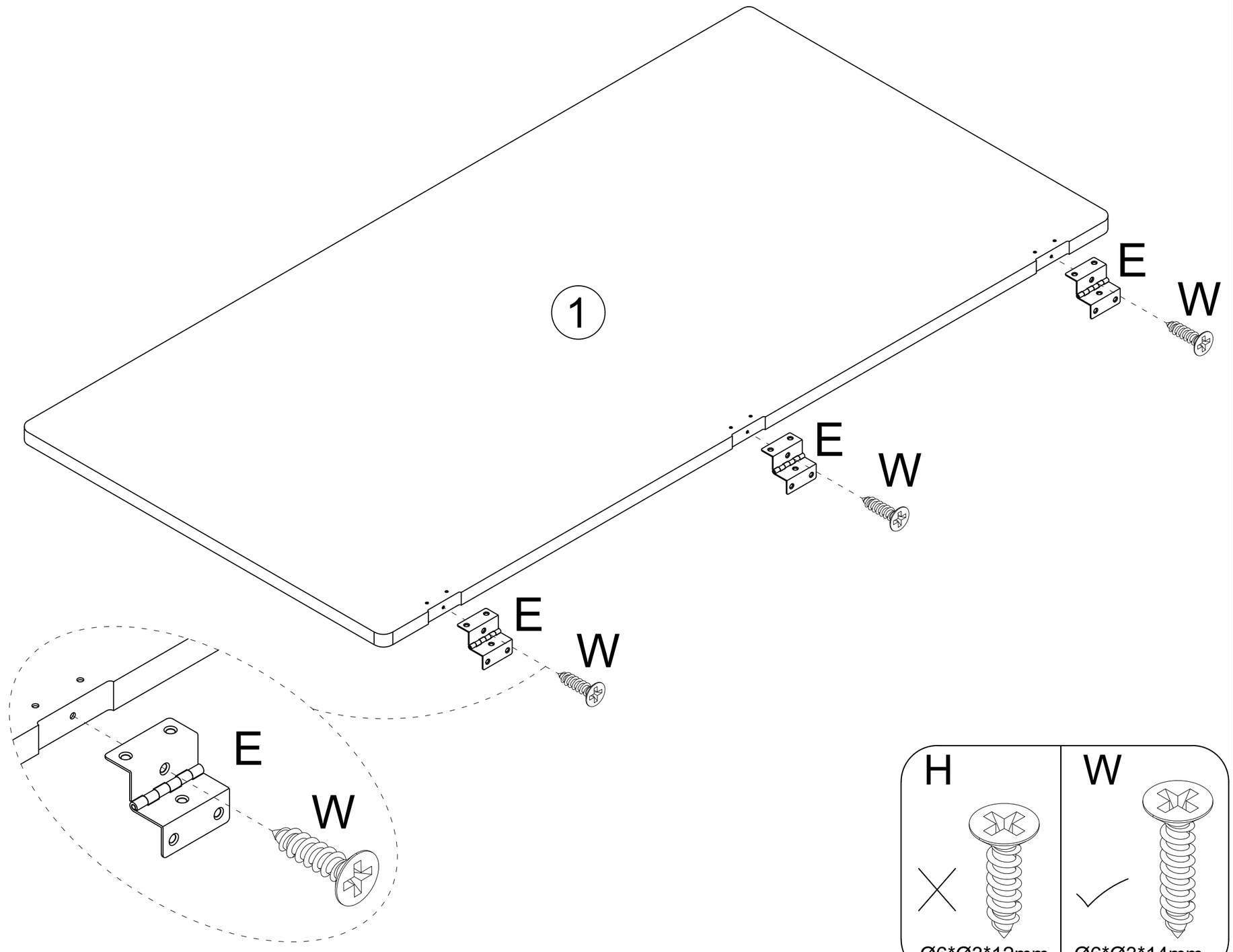

Ex3

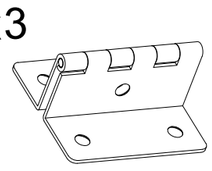

Wx3

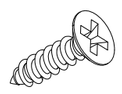

Ø6*Ø3*14mm

Use Screw(W) to secure Four-Fold Hinge(E) onto Panel(1).

STEP 36

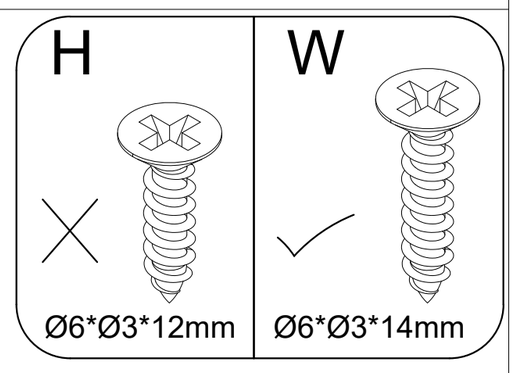

Wx12

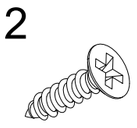

Ø6*Ø3*14mm

Use Screw(W) to secure Four-Fold Hinge(E) onto Panel(1) and(2).

STEP 37

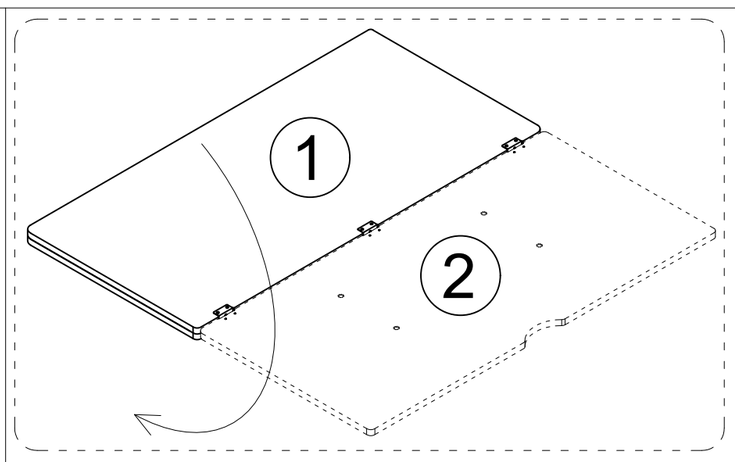

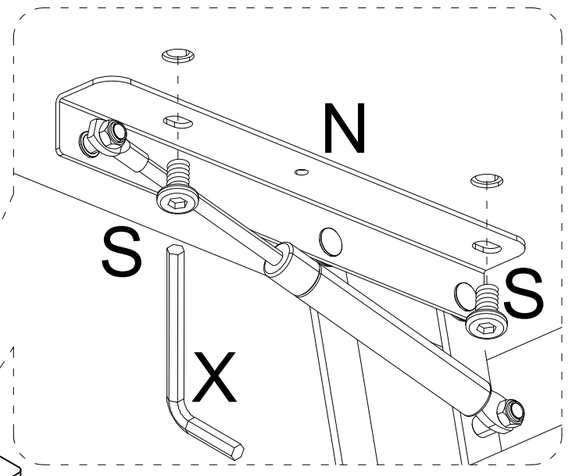

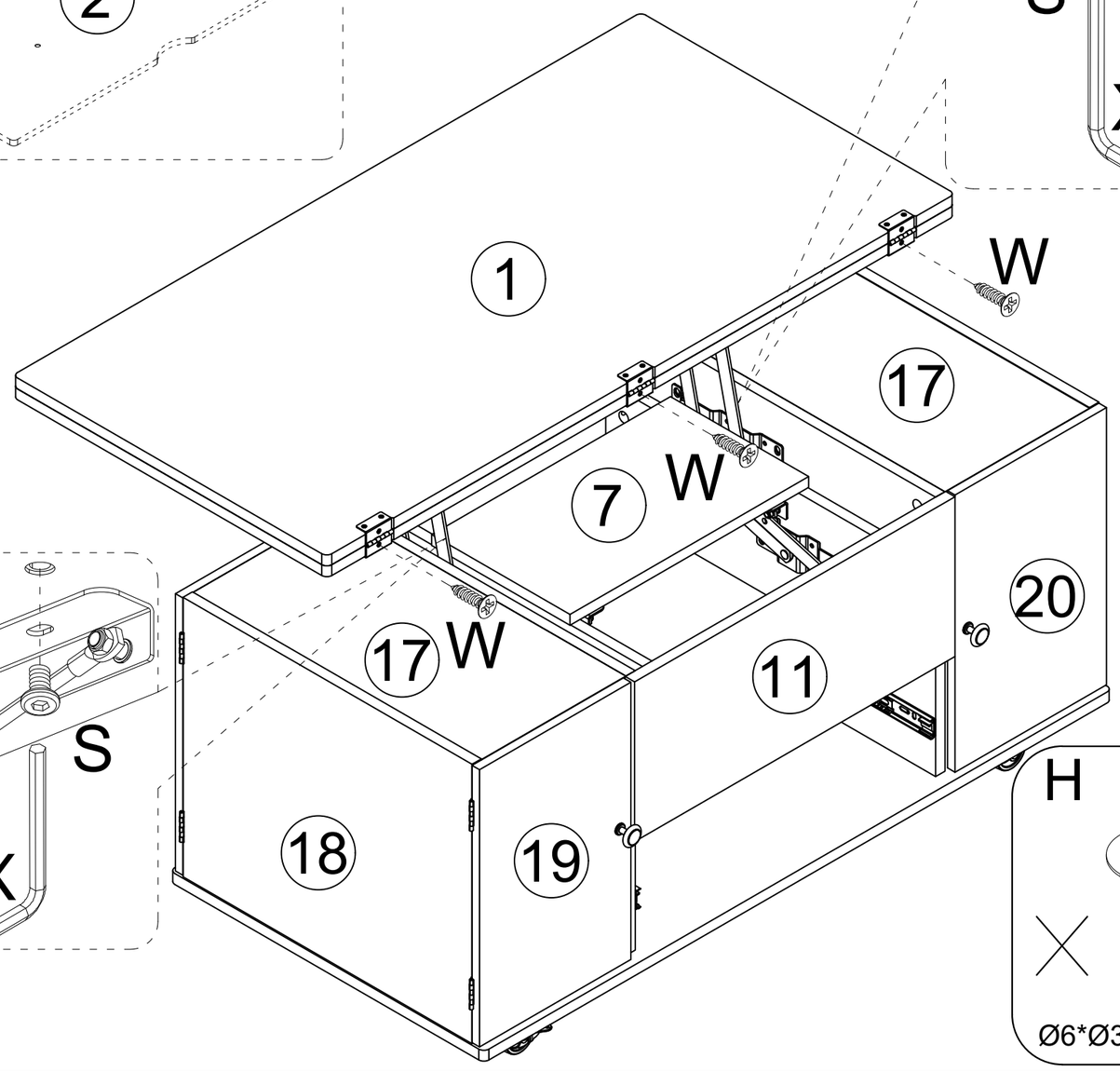

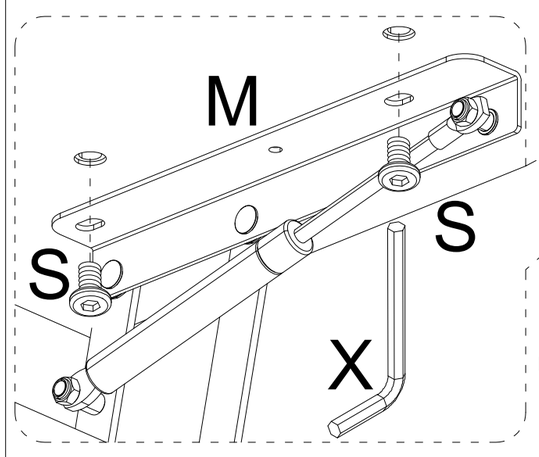

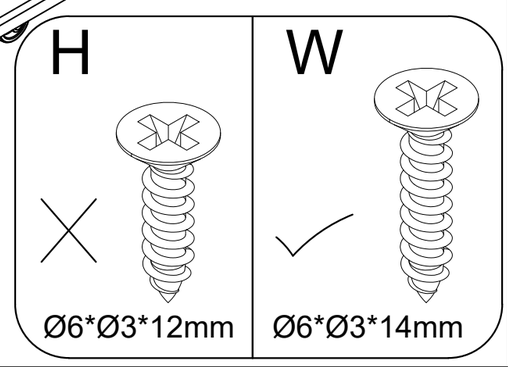

X x1

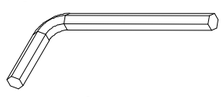

4mm

W x3

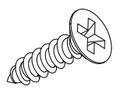

Ø6*Ø3*14mm

S x4



M6*10mm

Use Screw(W) to secure Four-Fold Hinge(E) onto Panel(2).
Use Bolt(S)to fix the panel that has been assembled in step(36) onto the Lift Mechanism(M)and(N).

STEP 38

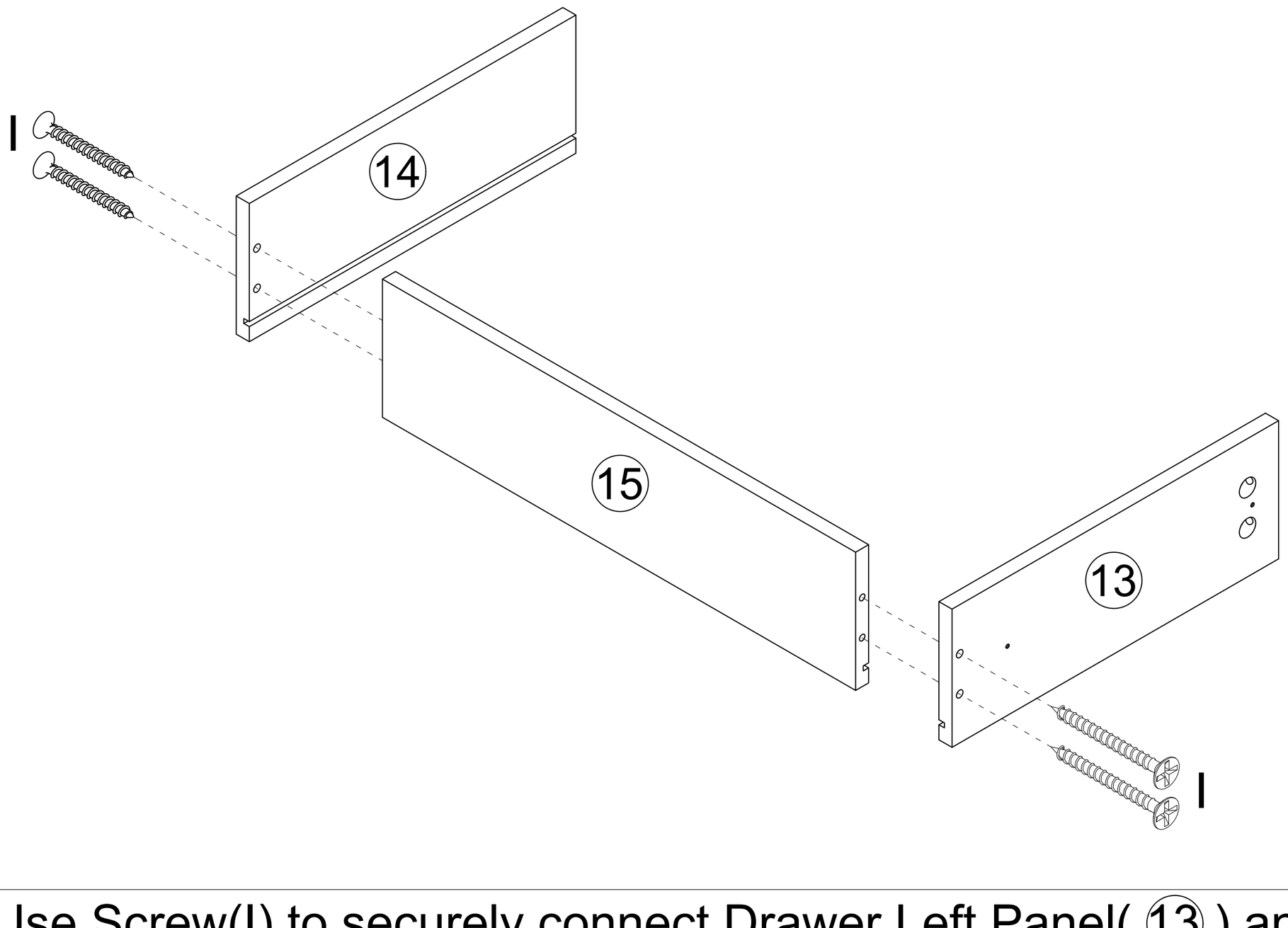

I x4

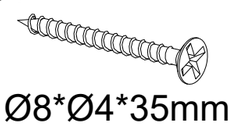

Ø8*Ø4*35mm

Use Screw(I) to securely connect Drawer Left Panel(13) and Drawer Rignt Panel (14) to Back Panel Of The Drawer(15).

STEP 39

The thin plate needs to be fully inserted into the groove. If the insertion is not smooth, you can try pressing from the front or the back to make adjustments until the thin plate is fully inserted into the groove.

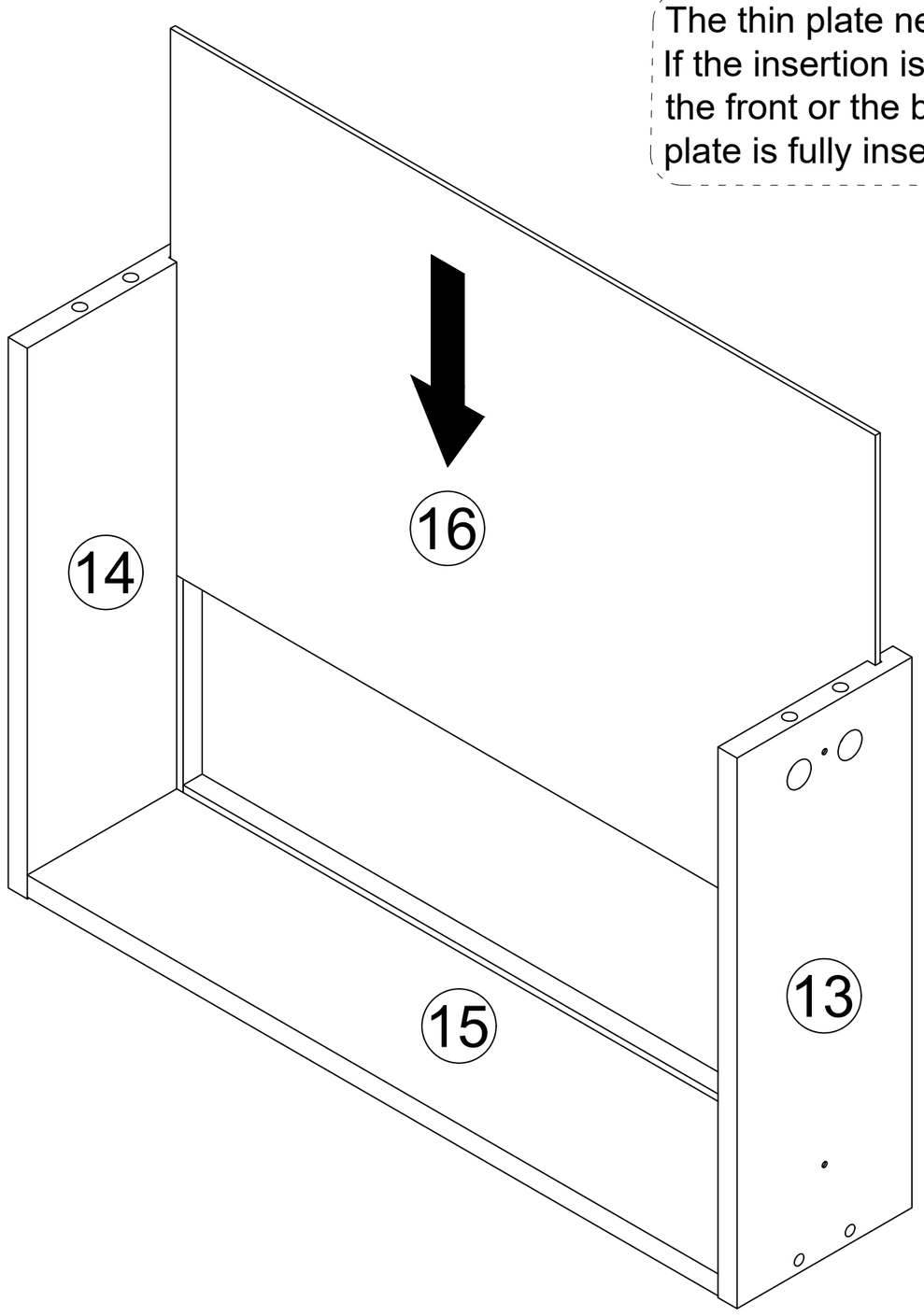

Insert Drawer Bottom Plate(16) into the corresponding slot.

STEP 40

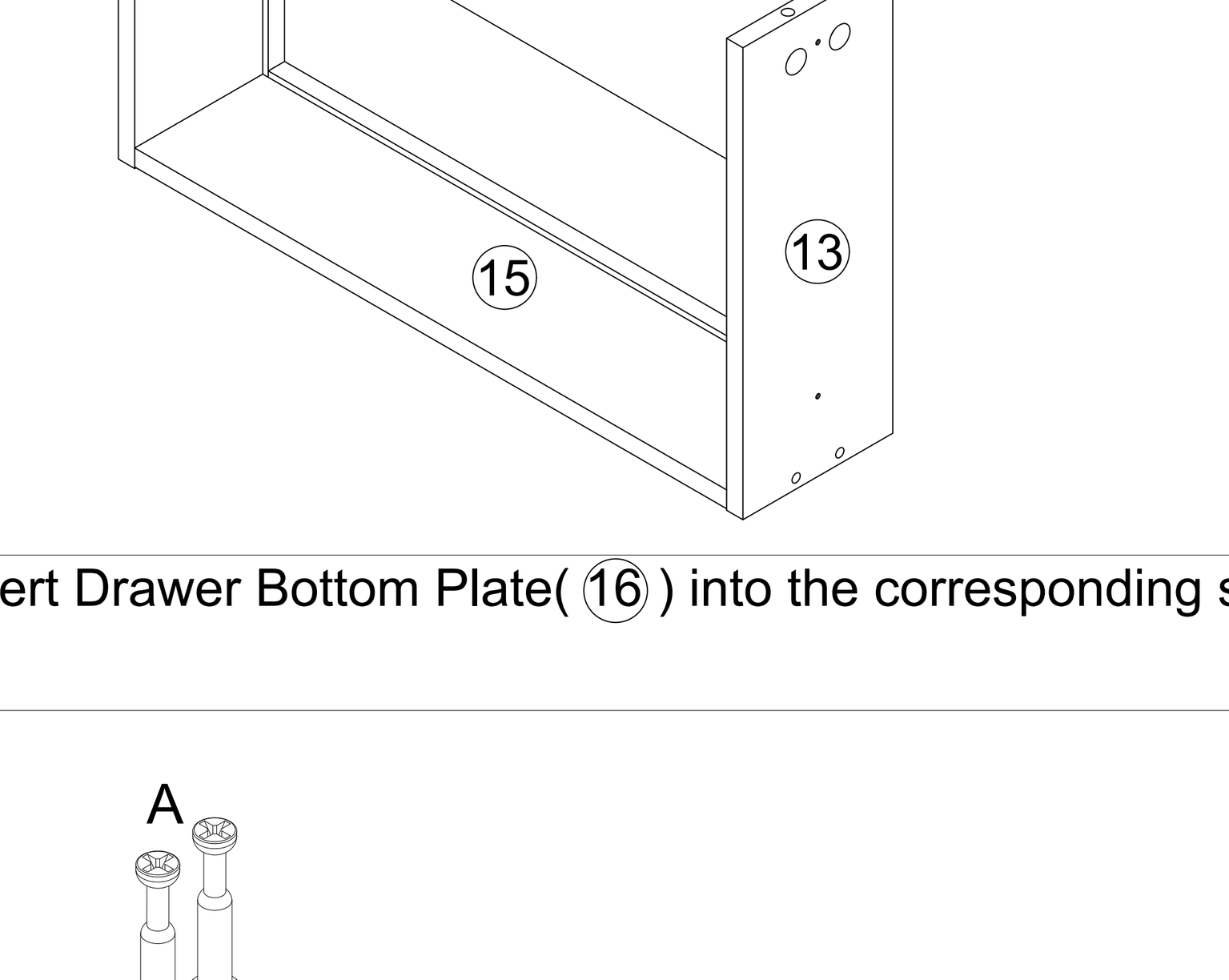

A x4

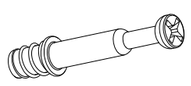

Ø6*35mm

Fix Cam Bolt(A) onto Drawer Front Panel(12).

STEP 41

The thin plate needs to be fully inserted into the groove. If the insertion is not smooth, you can try pressing from the front or the back to make adjustments until the thin plate is fully inserted into the groove.

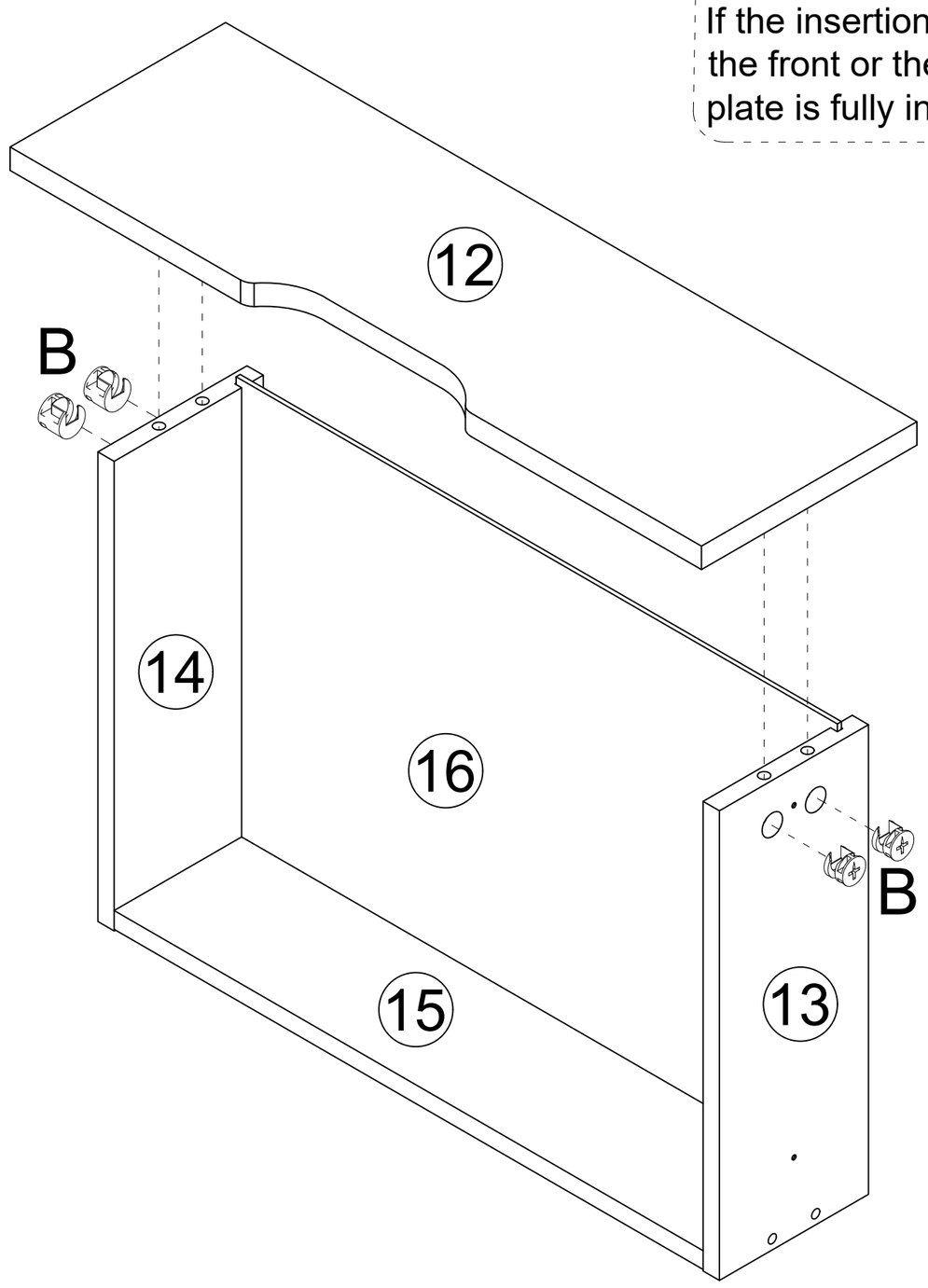

B x4

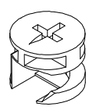

Ø15*10mm

Align Drawer Front Panel(12)properly and then lock Cam Nut(B).

STEP 42

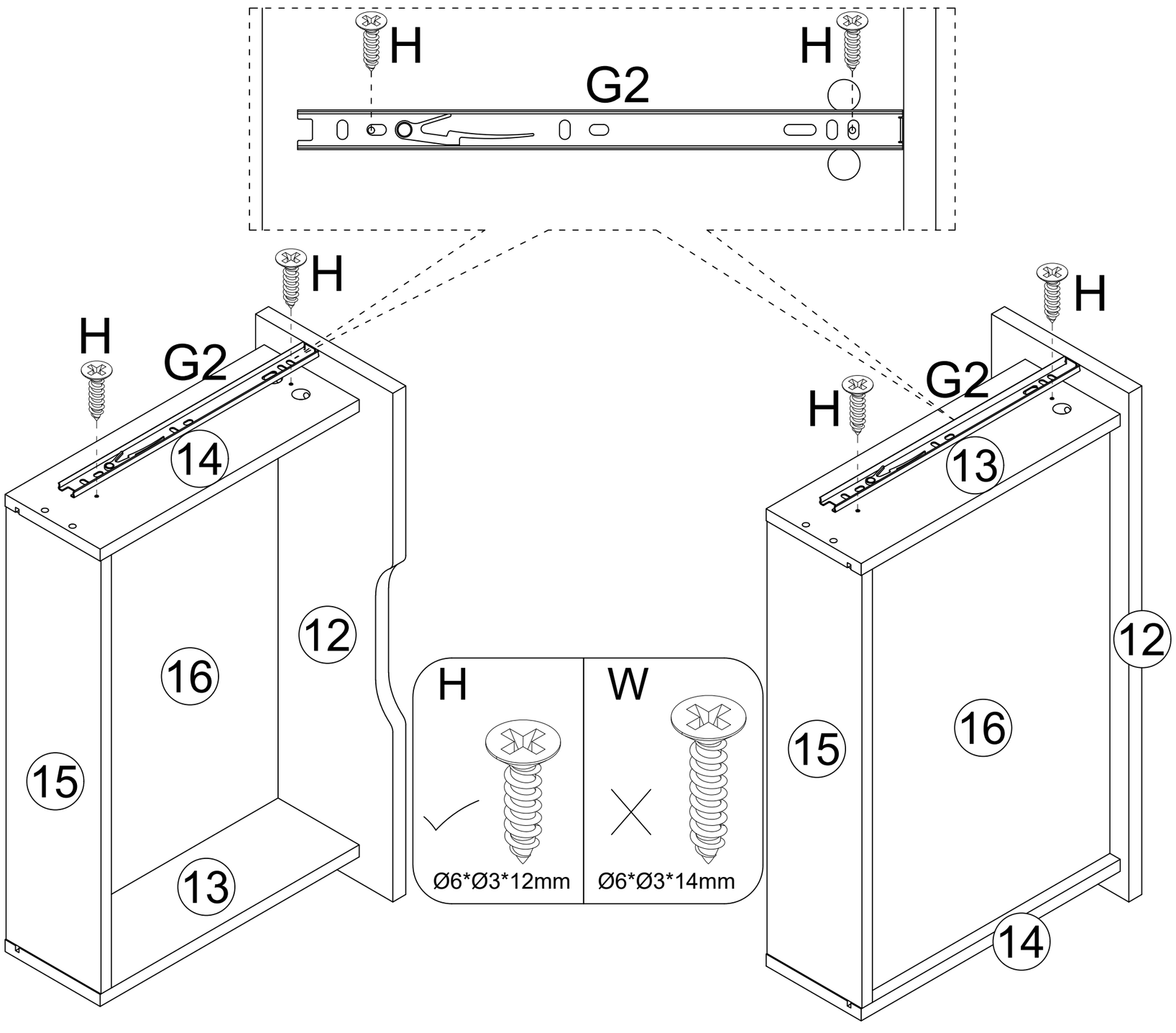

G2x2

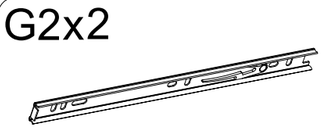

L=285mm

Hx4

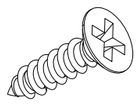

Ø6*Ø3*12mm

Use Screw(H)to securely fasten and fix Sliding Rails(G2) onto Drawer Left Panel(13) and Drawer Rignt Panel (14).

STEP 43

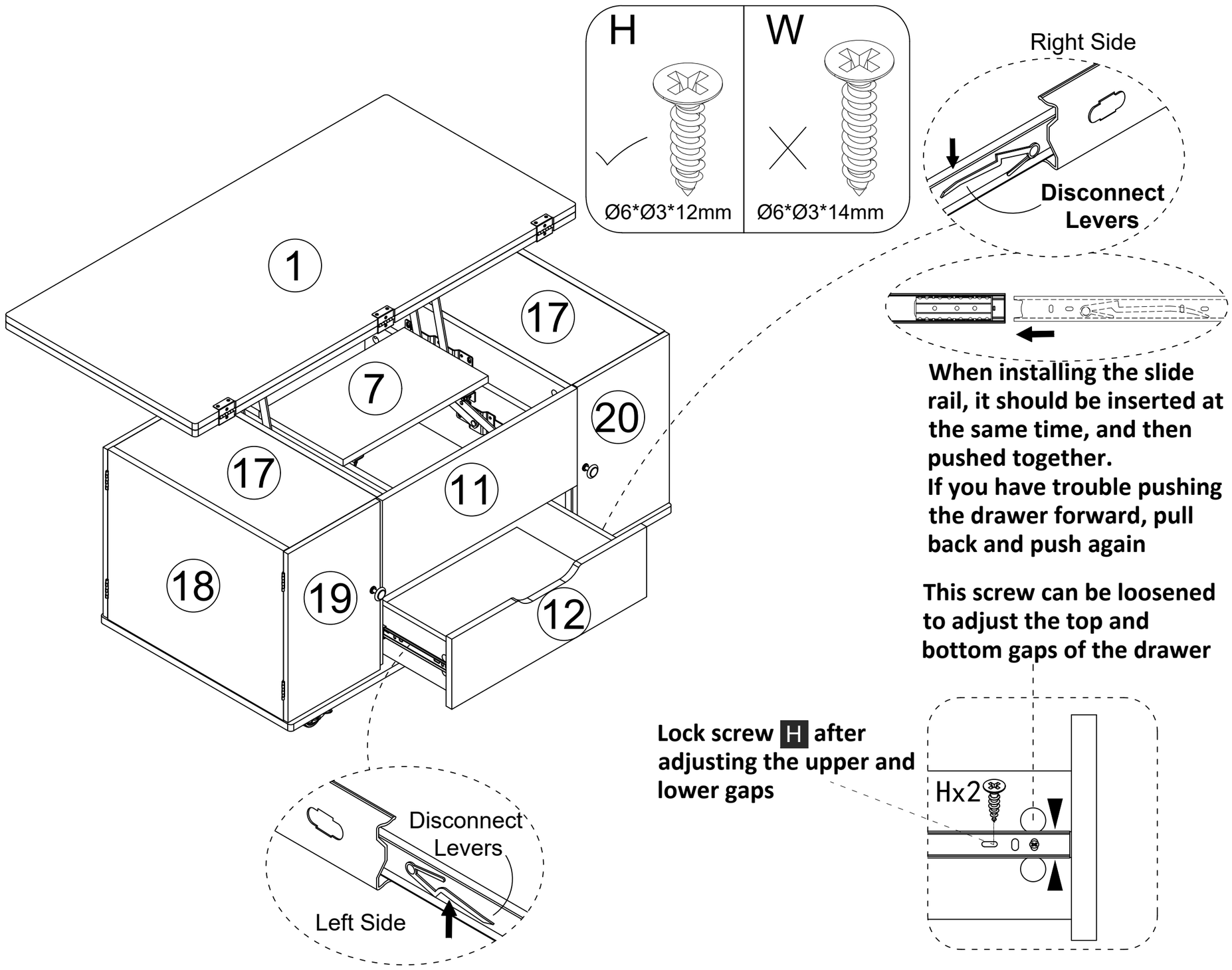

Hx2

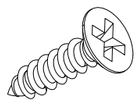

Ø6*Ø3*12mm

Align and install the installed drawer using Sliding Rails (G1) and (G2).

STEP 44

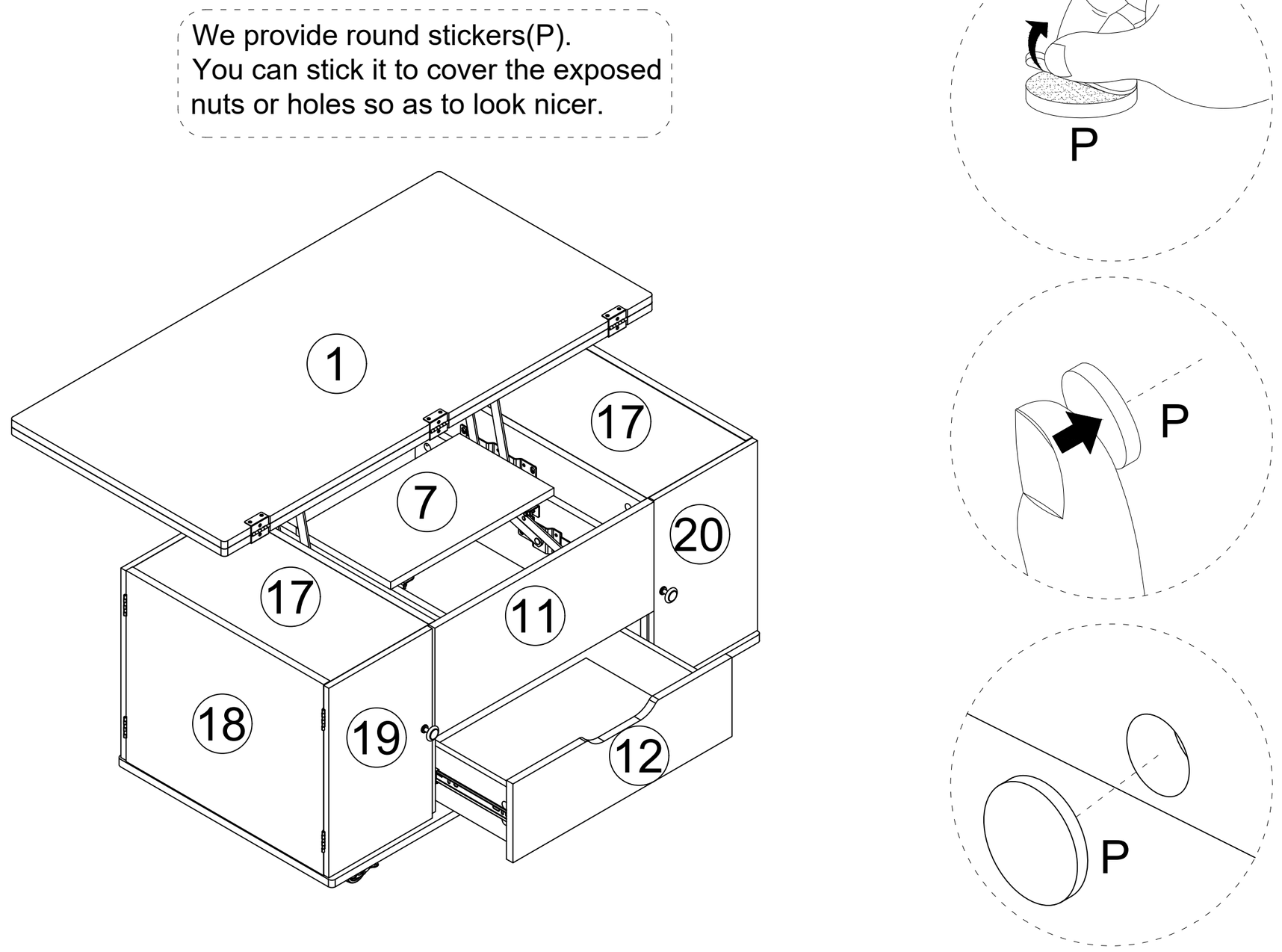

Px 38

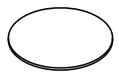

Ø20mm

The visible holes can be covered by Pad(P).

STEP 45

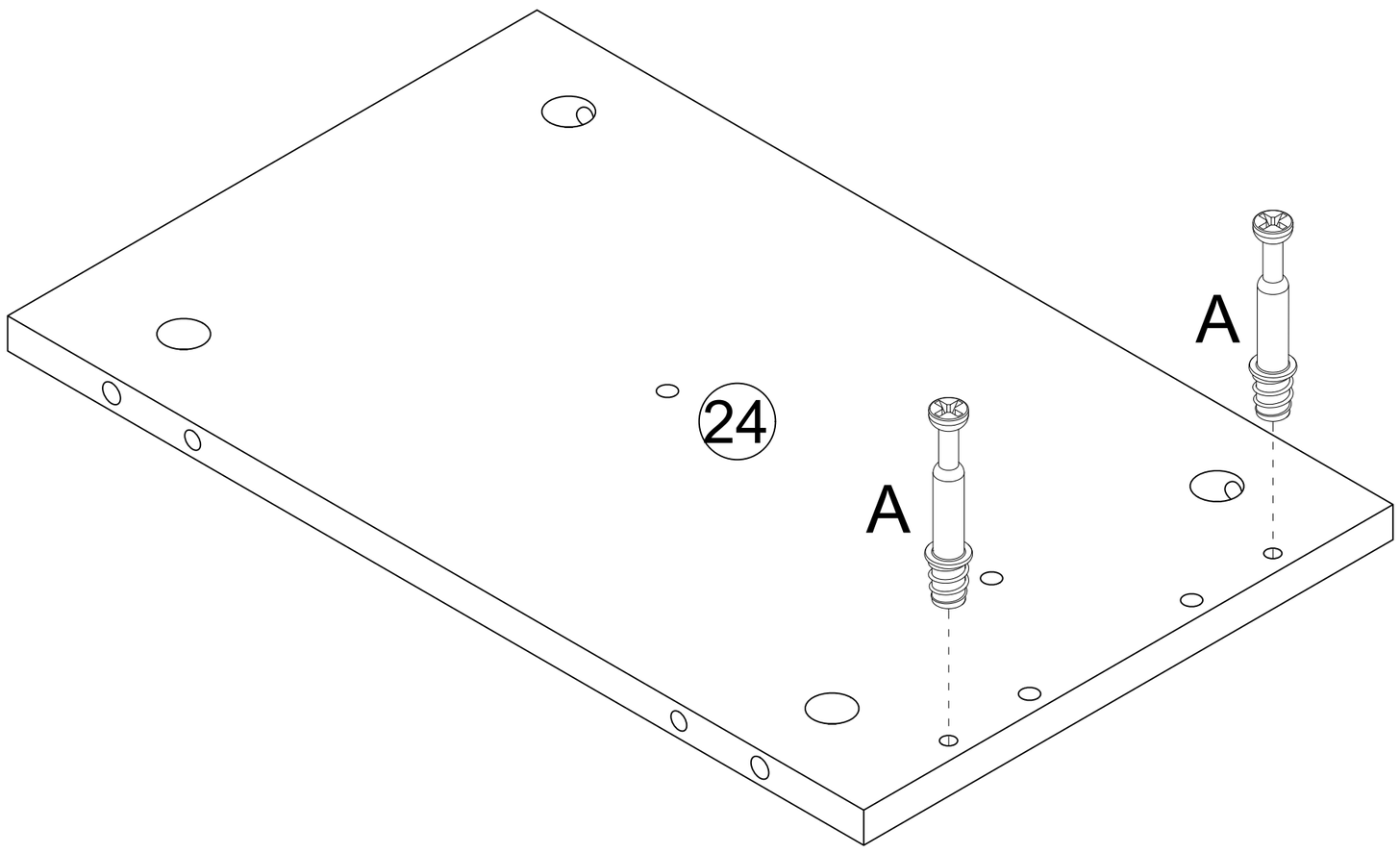

x8

Ax16

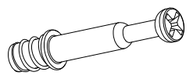

Ø6*35mm

Lock and fix Cam Bolt(A)onto Stool Front And Rear Board(24). Repeat this action eight times.

STEP 46

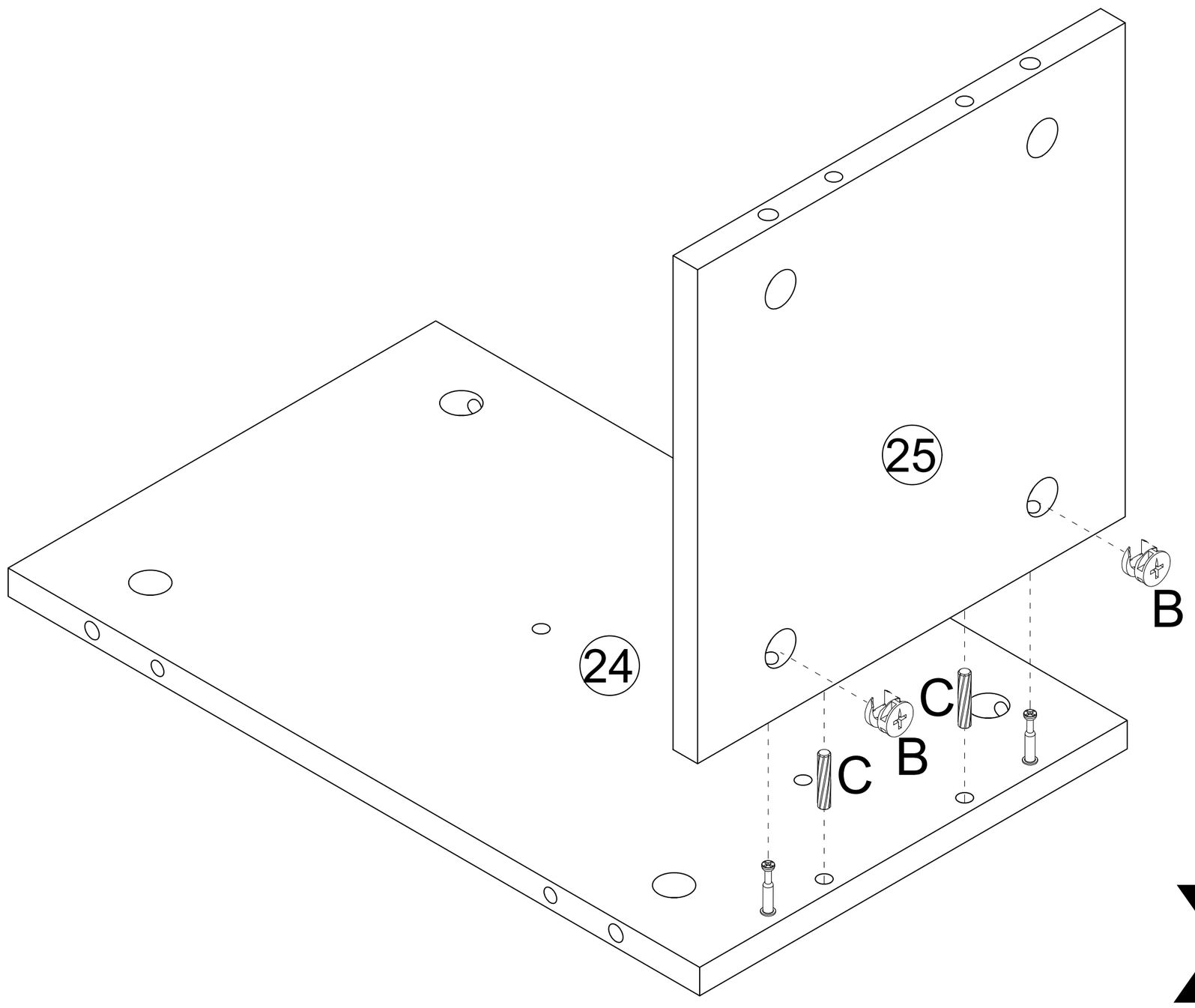

x4

Bx8



Ø15*10mm

Cx8



Ø6*30mm

Connect Stool Front And Rear Board(24) and Stool Base Plate(25) with Dowel(C)and then lock Cam Nut(B) .Repeat this action four times.

STEP 47

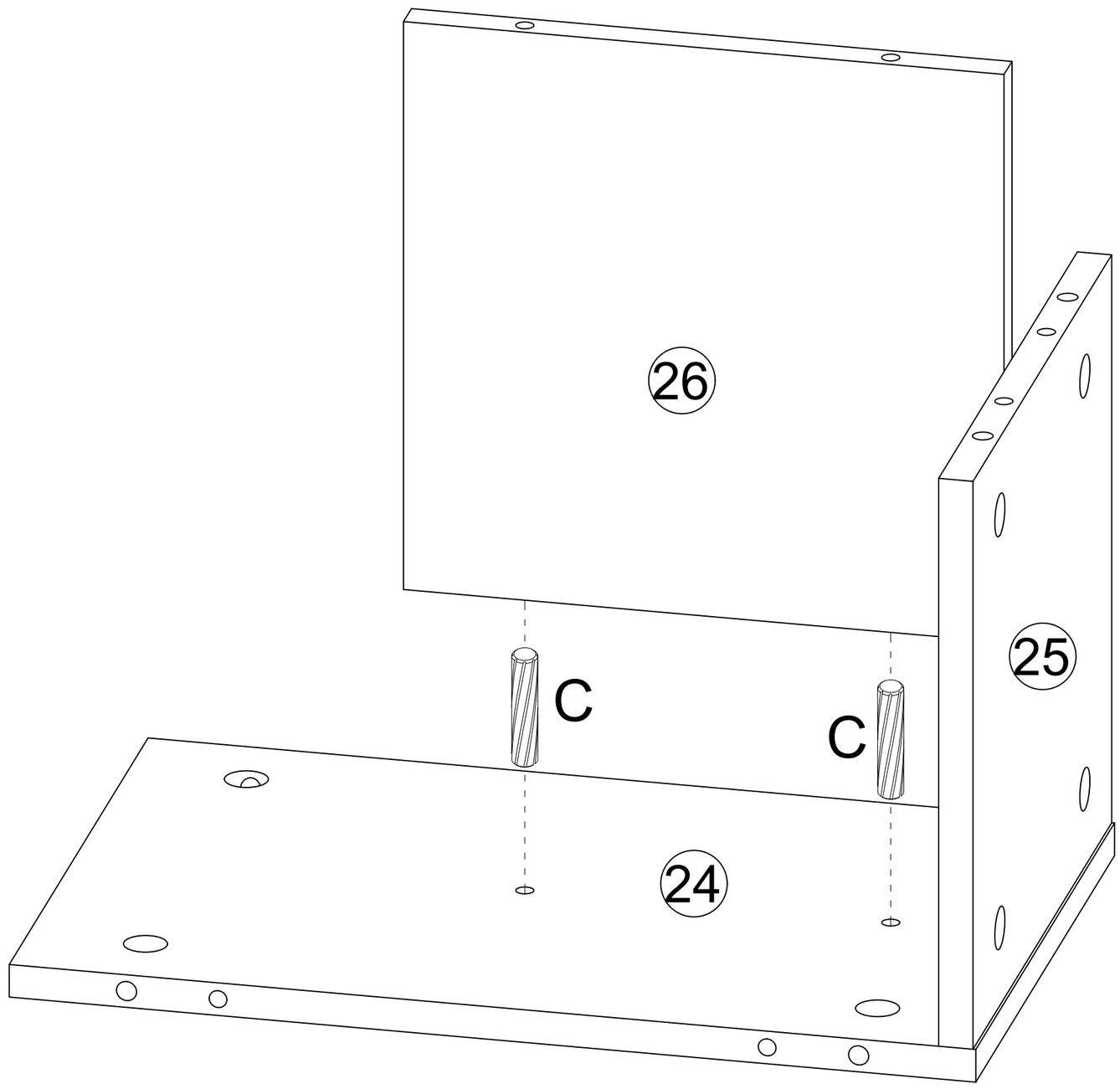

x4

Cx8



Ø6*30mm

Connect Stool Front And Rear Board(24) and Stool Vertical Board(26) using Dowel(C).Repeat this action four times.

STEP 48

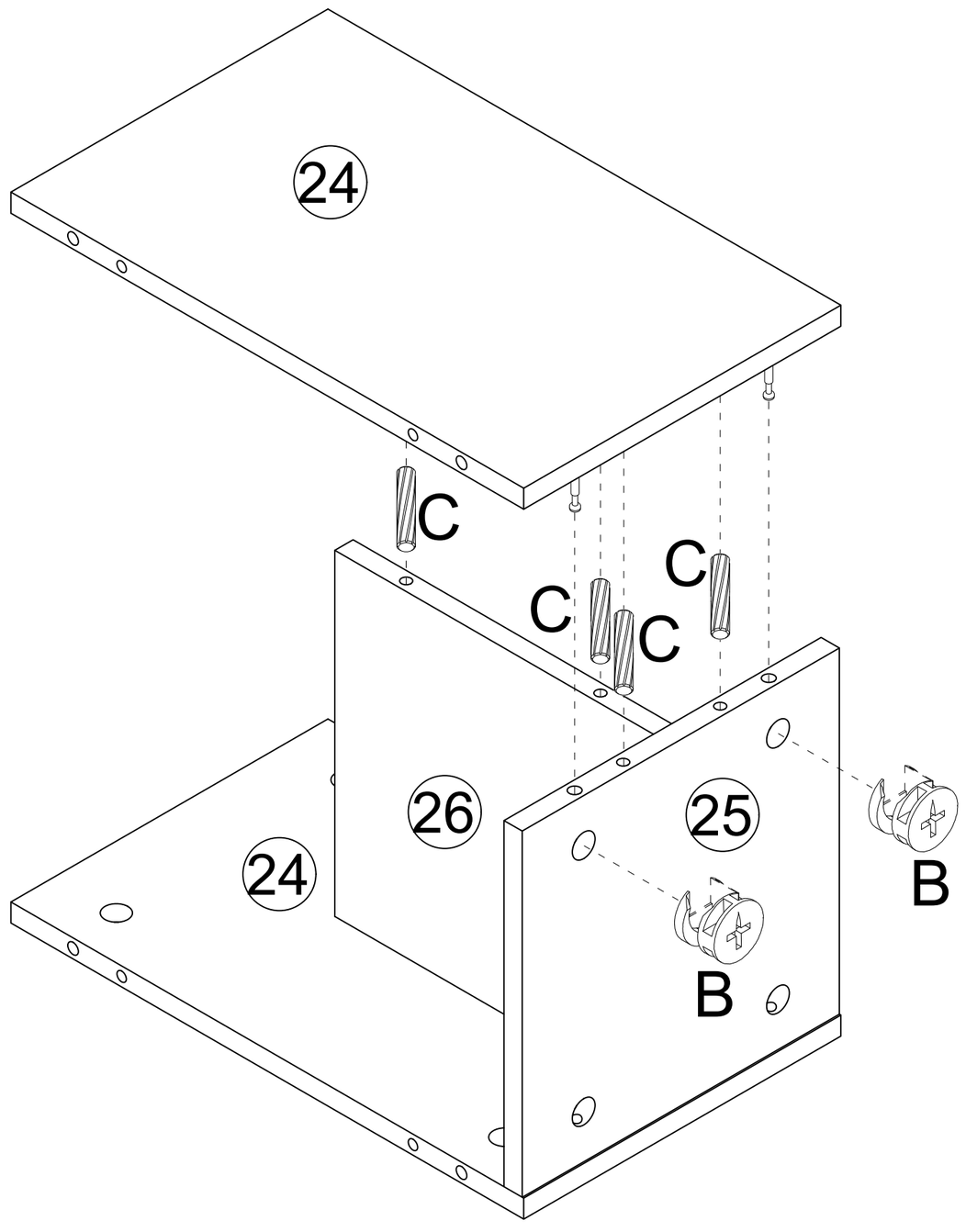

x4

Bx8



Ø15*10mm

Cx16



Ø6*30mm

After aligning Stool Front And Rear Board(24)with Dowel(C) and making the correct connections, lock Cam Nut(B).Repeat this action four times.

STEP 49

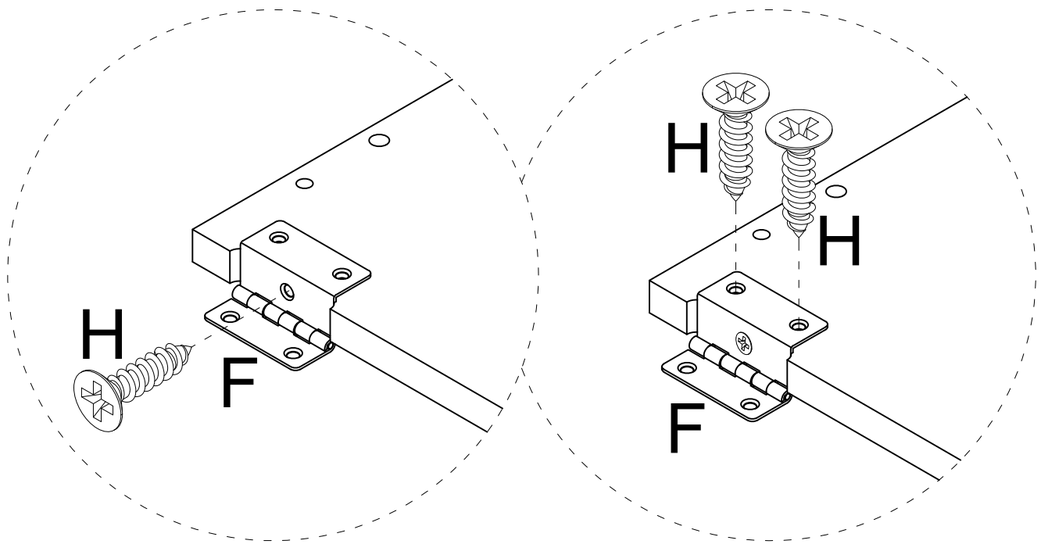

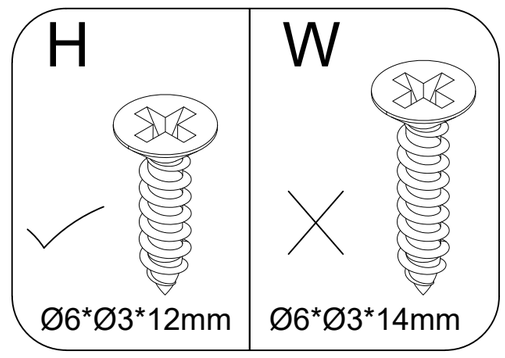

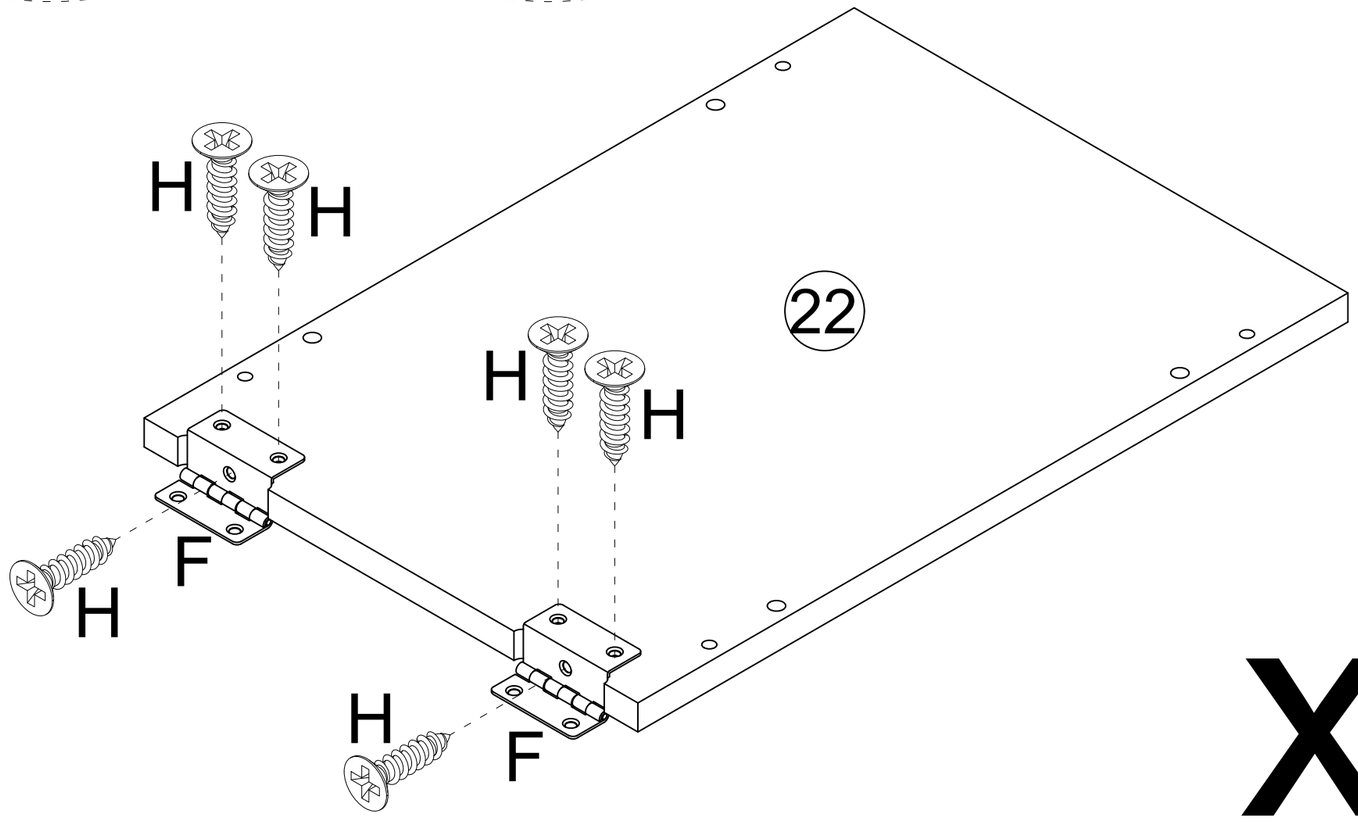

x4

F x8

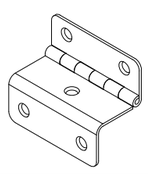

Hx24

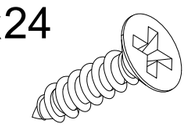

Ø6*Ø3*12mm

Use Screw(H)to securely fasten and fix Three-Fold Hinge(F) onto Stool Left Board(22).Repeat this action four times.

STEP 50

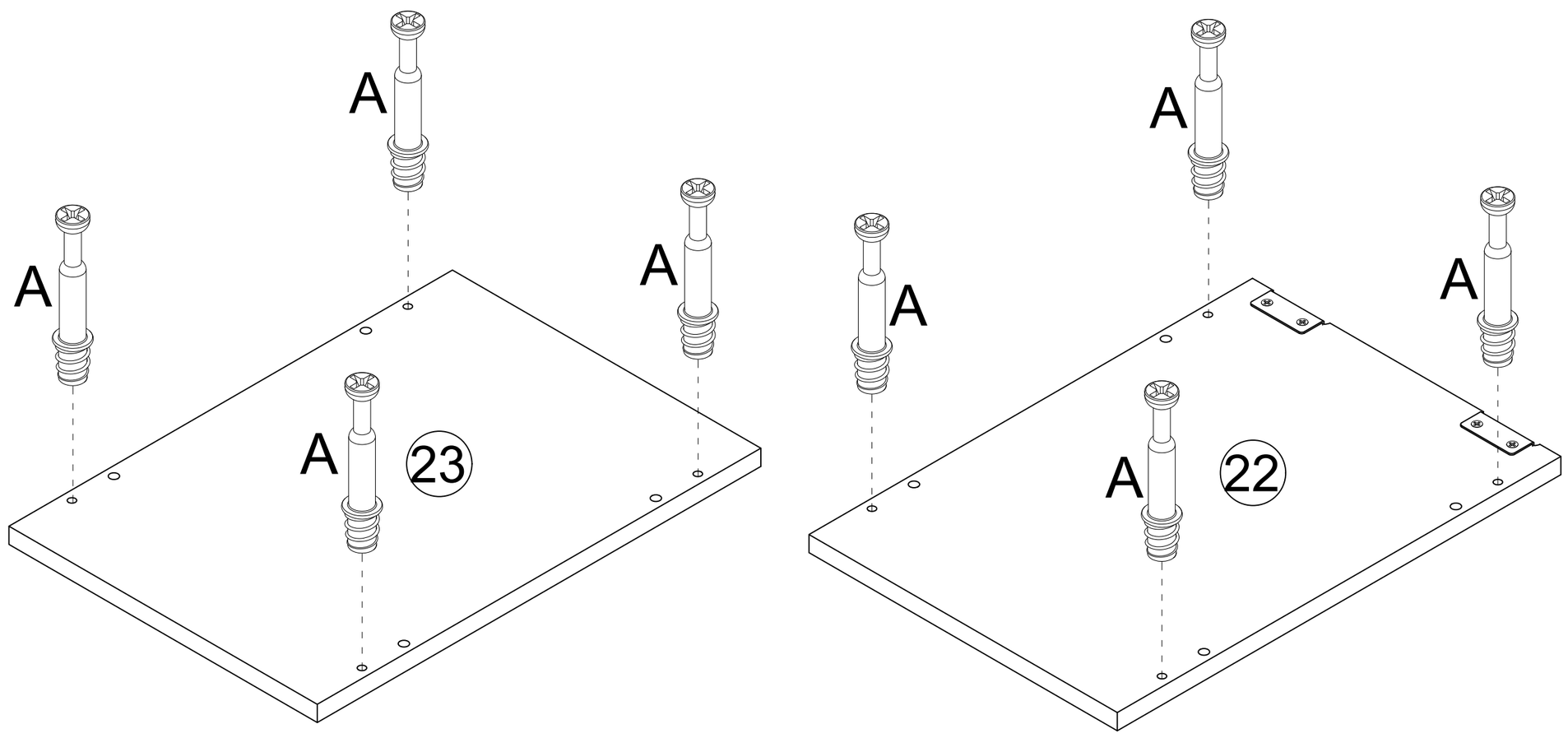

x4

Ax32

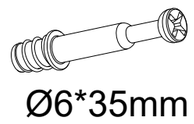

Ø6*35mm

Lock and fix Cam Bolt(A) onto Stool Left Board(22) and Stool Right Board(23). Repeat this action four times.

STEP 51

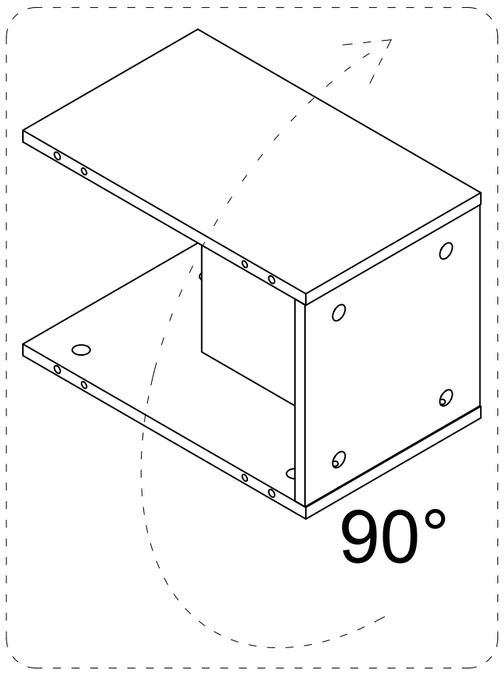

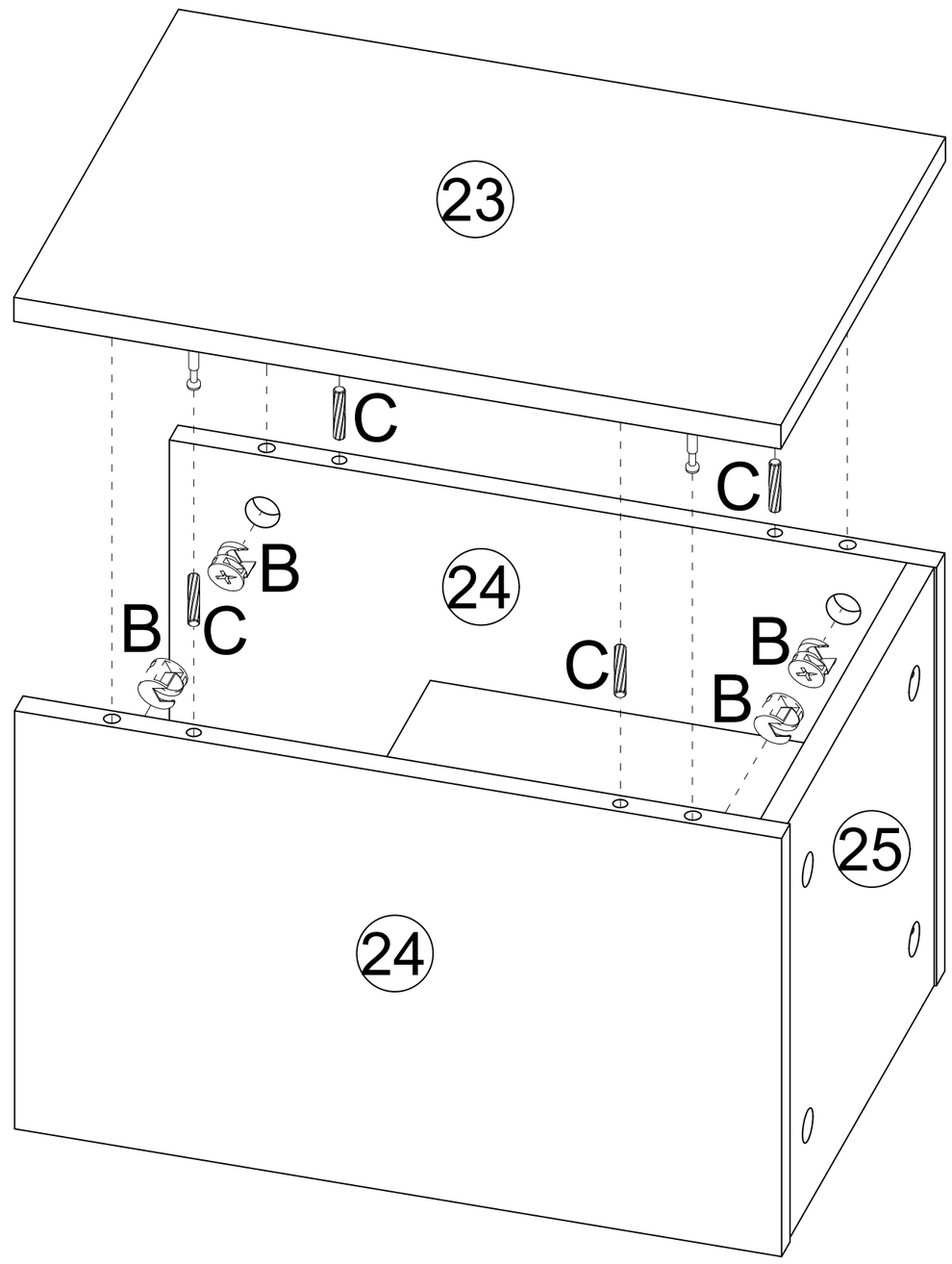

x4

B x16



Ø15*10mm

C x16



Ø6*30mm

After aligning Stool Right Board(23)with Dowel(C)and making the correct connections, lock Cam Nut(B).Repeat this action four times.

STEP 52

Pay attention to the direction

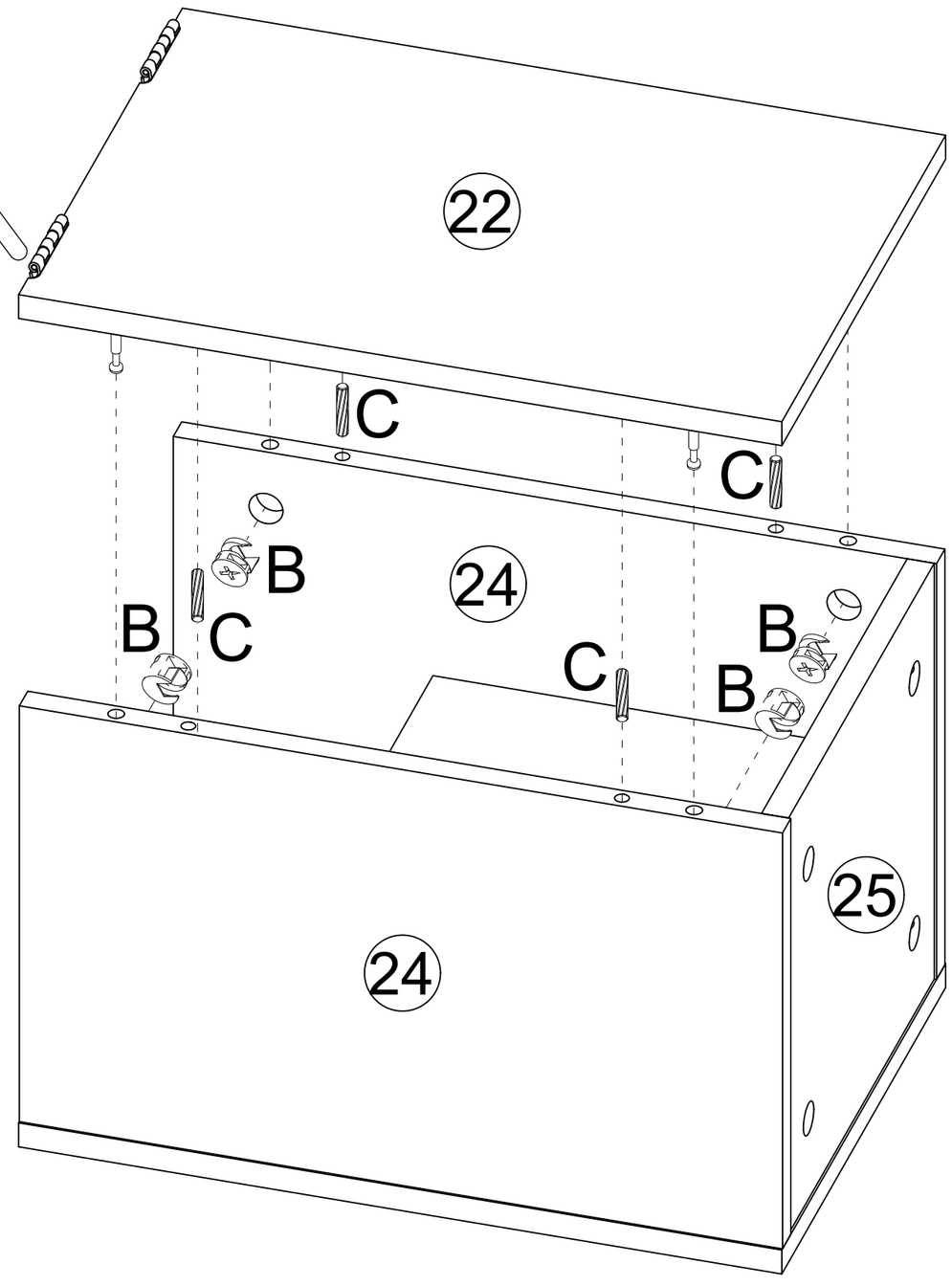

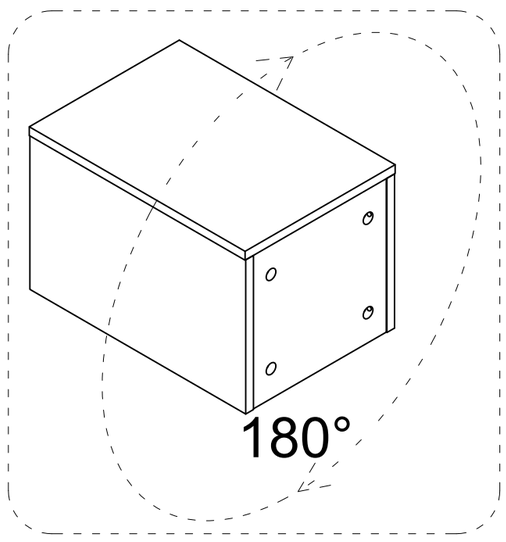

x4

B x16



Ø15*10mm

C x16



Ø6*30mm

After aligning Stool Left Board(22) with Dowel(C) and making the correct connections, lock Cam Nut(B).Repeat this action four times.

STEP 53

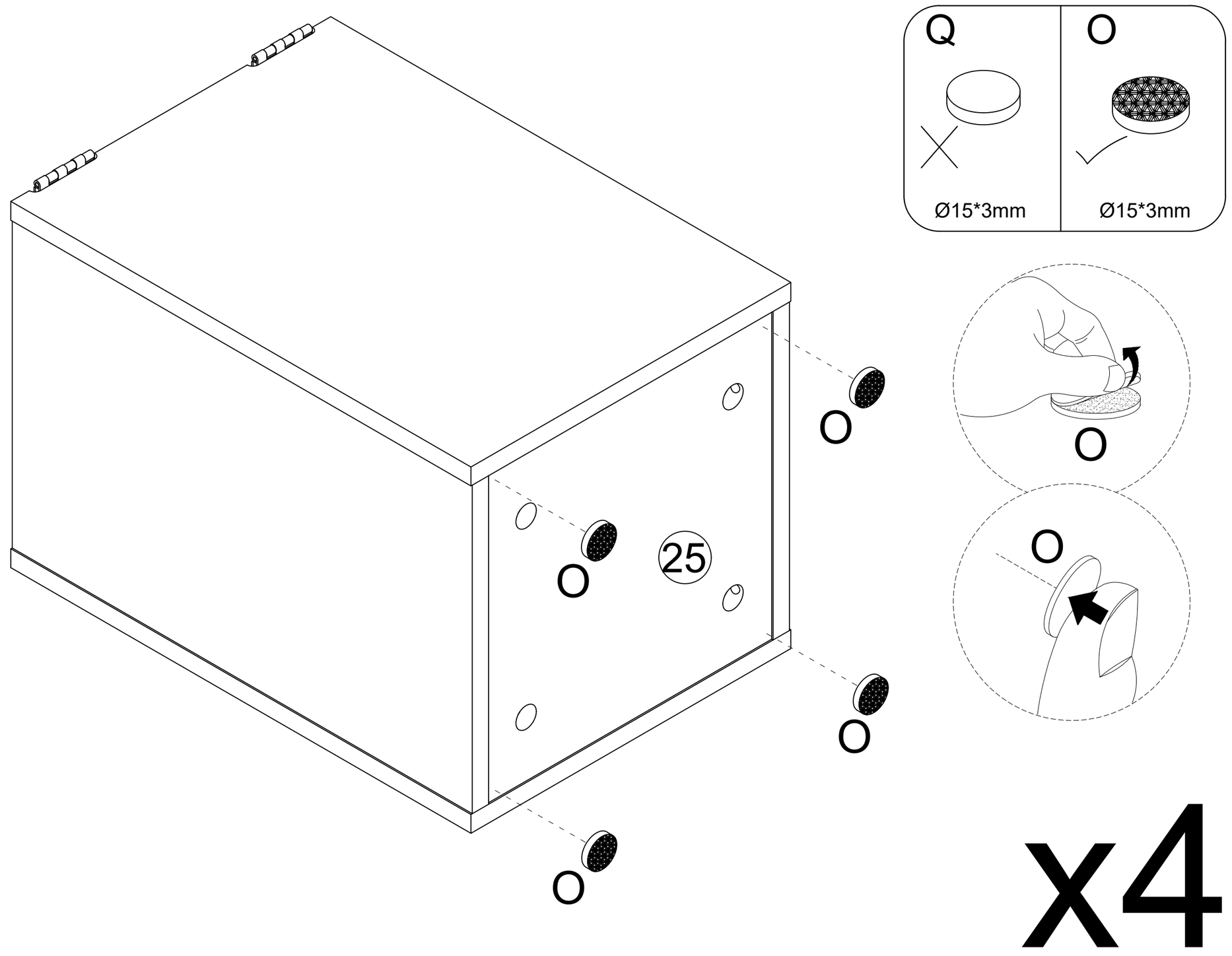

Ox16



Ø15*3mm

Fix Pad(O)in the corresponding position.Repeat this action four times.

STEP 54

When installing, be sure to hold it steady with your hands.

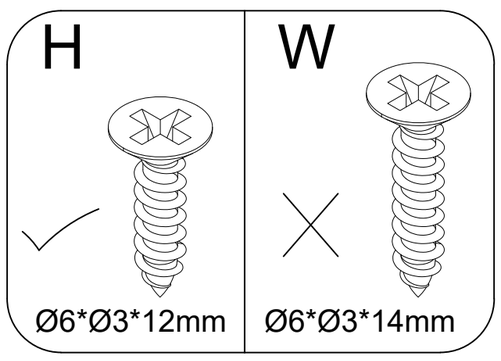

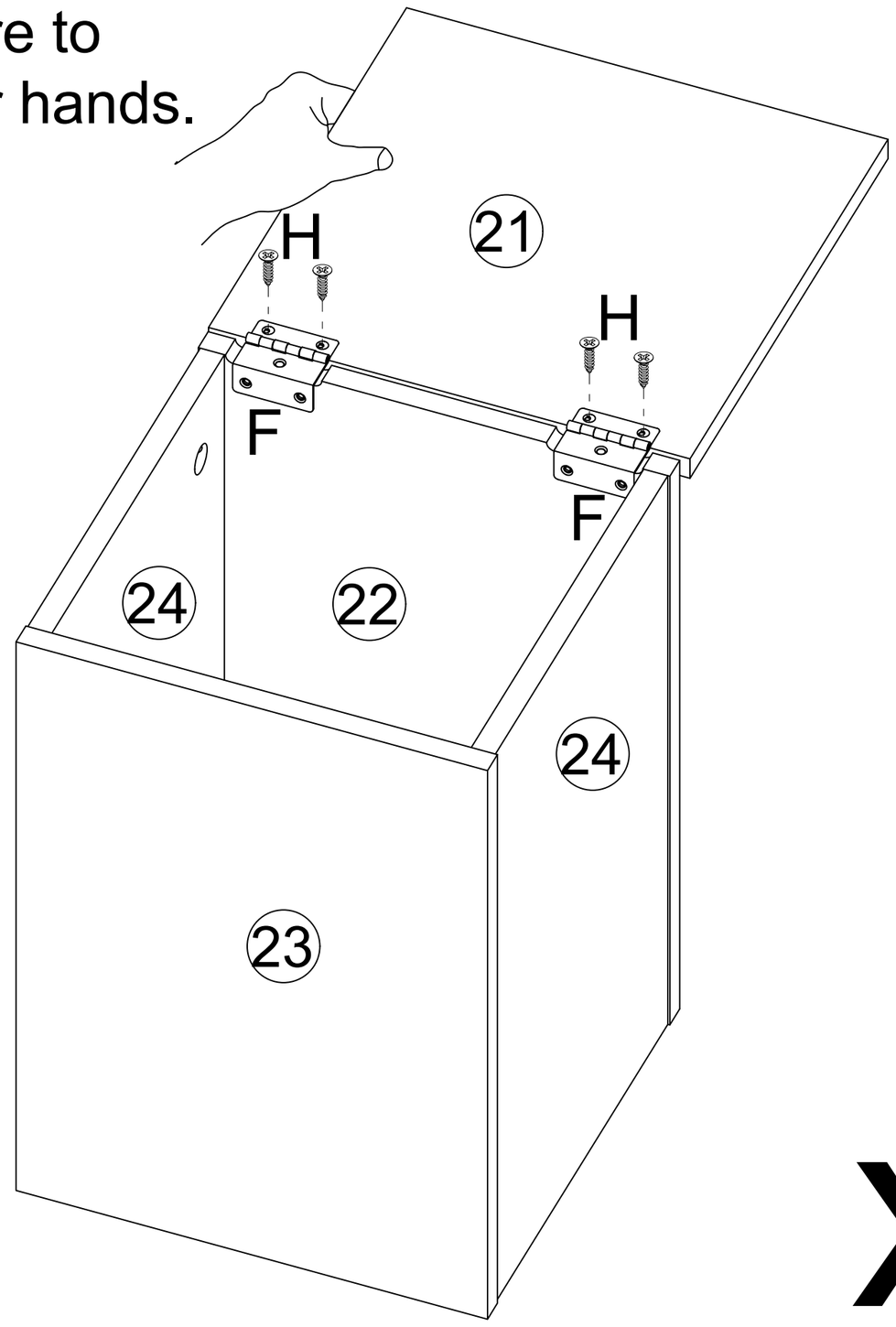

Hx16

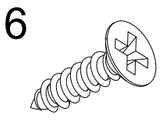

Ø6*Ø3*12mm

Use Screw(H)to securely fasten and fix Seat Panel(21) onto Three-Fold Hinge(F).Repeat this action four times.

STEP 55

We provide round stickers(P).
You can stick it to cover the exposed nuts or holes so as to look nicer.



Be careful not to get your hand caught when operating switch component (21).

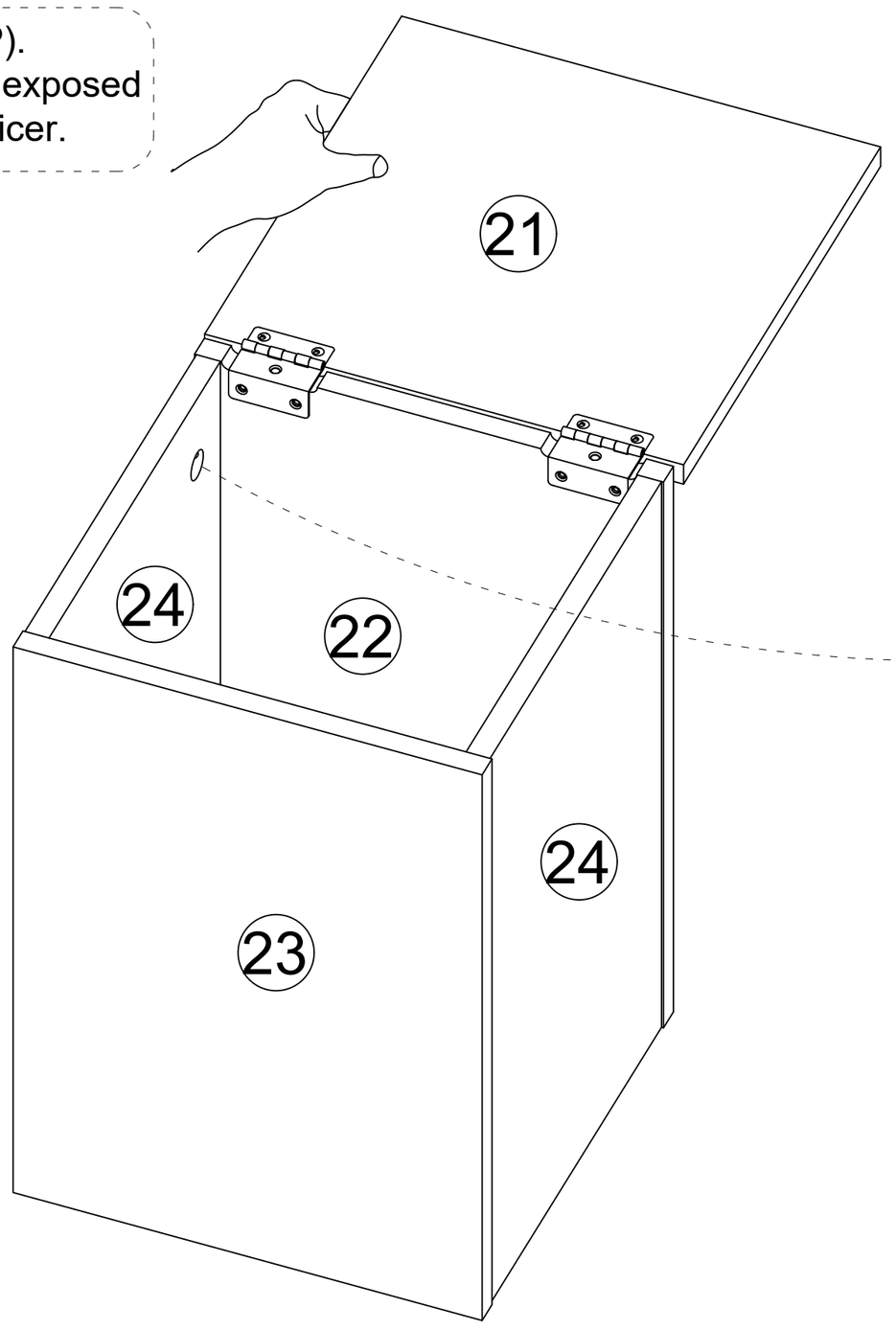

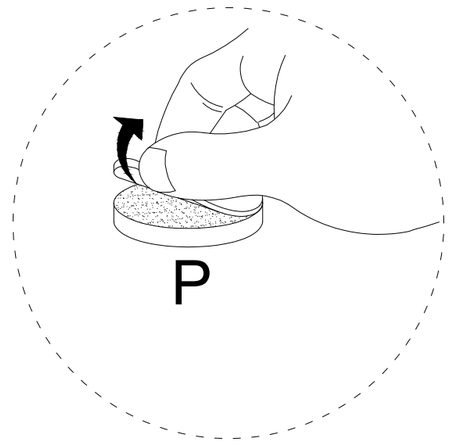

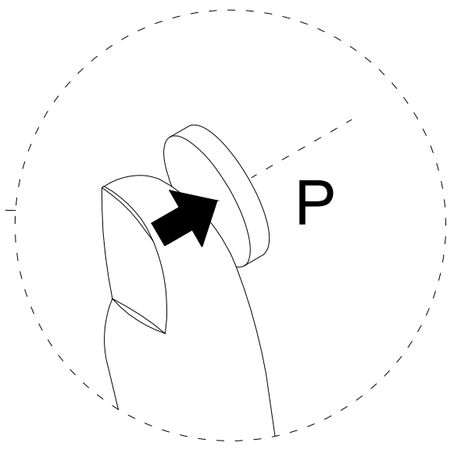

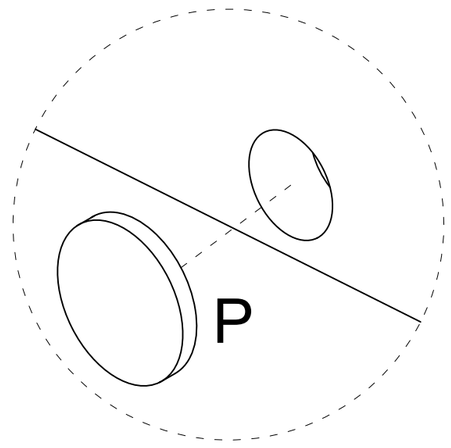

x4

Px32



Ø20mm

The visible holes can be covered by Pad(P).

STEP 56

Remove the film from the surface

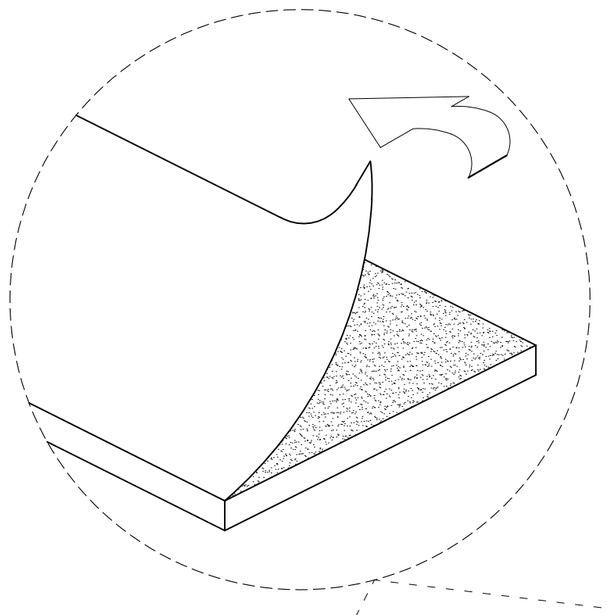

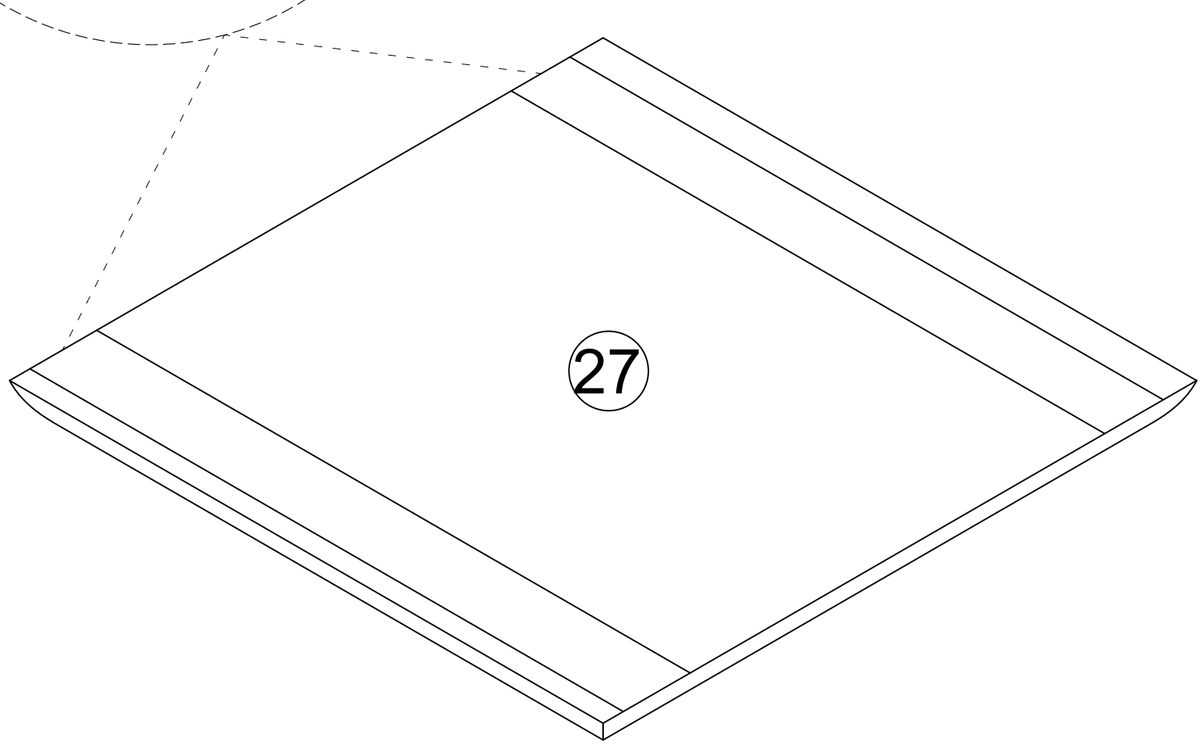

x4

Remove the film from the surface.Repeat this action four times.

STEP 57

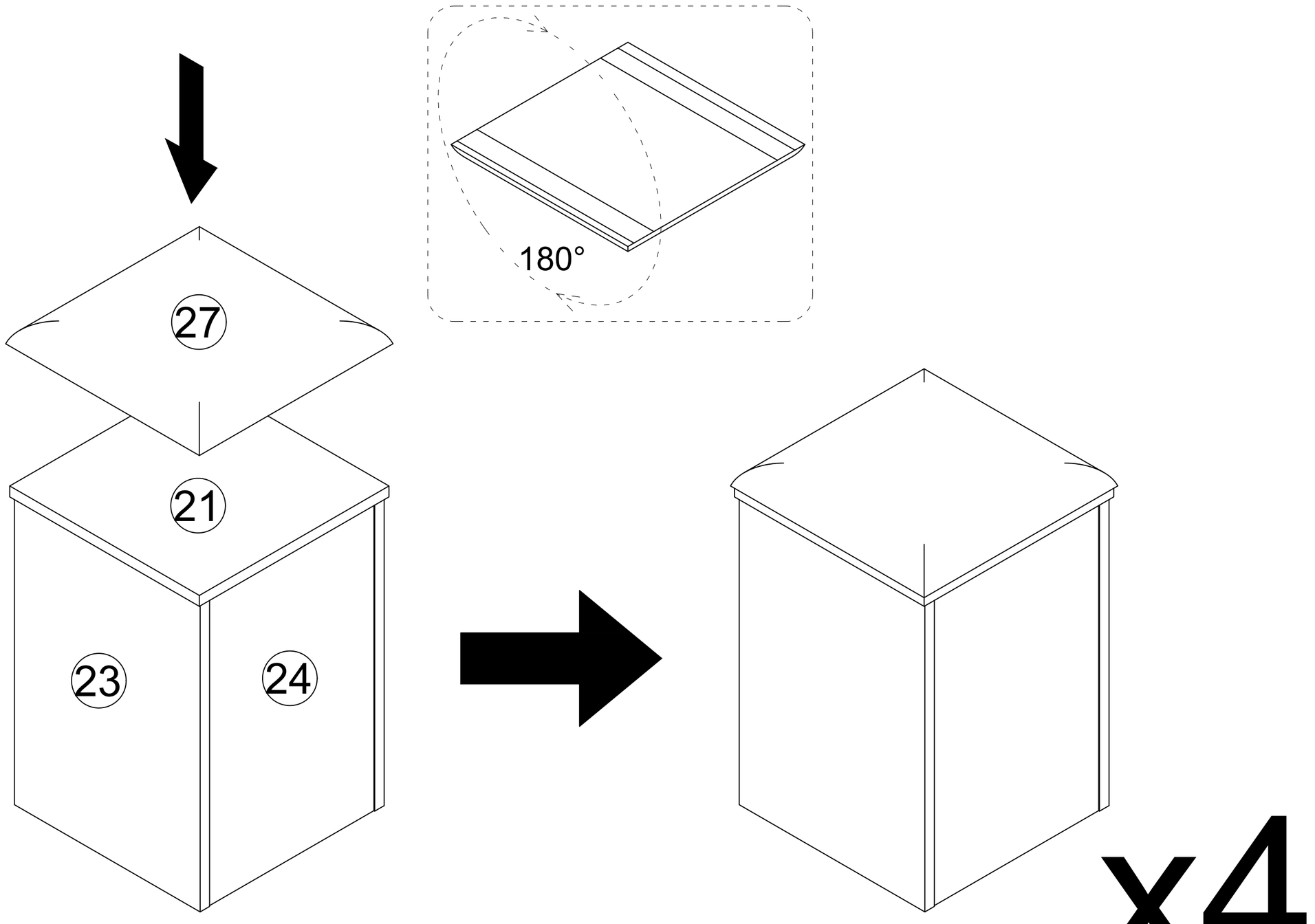

Align and paste Soft Panel Surface(27)onto Seat Panel(21)

STEP 58

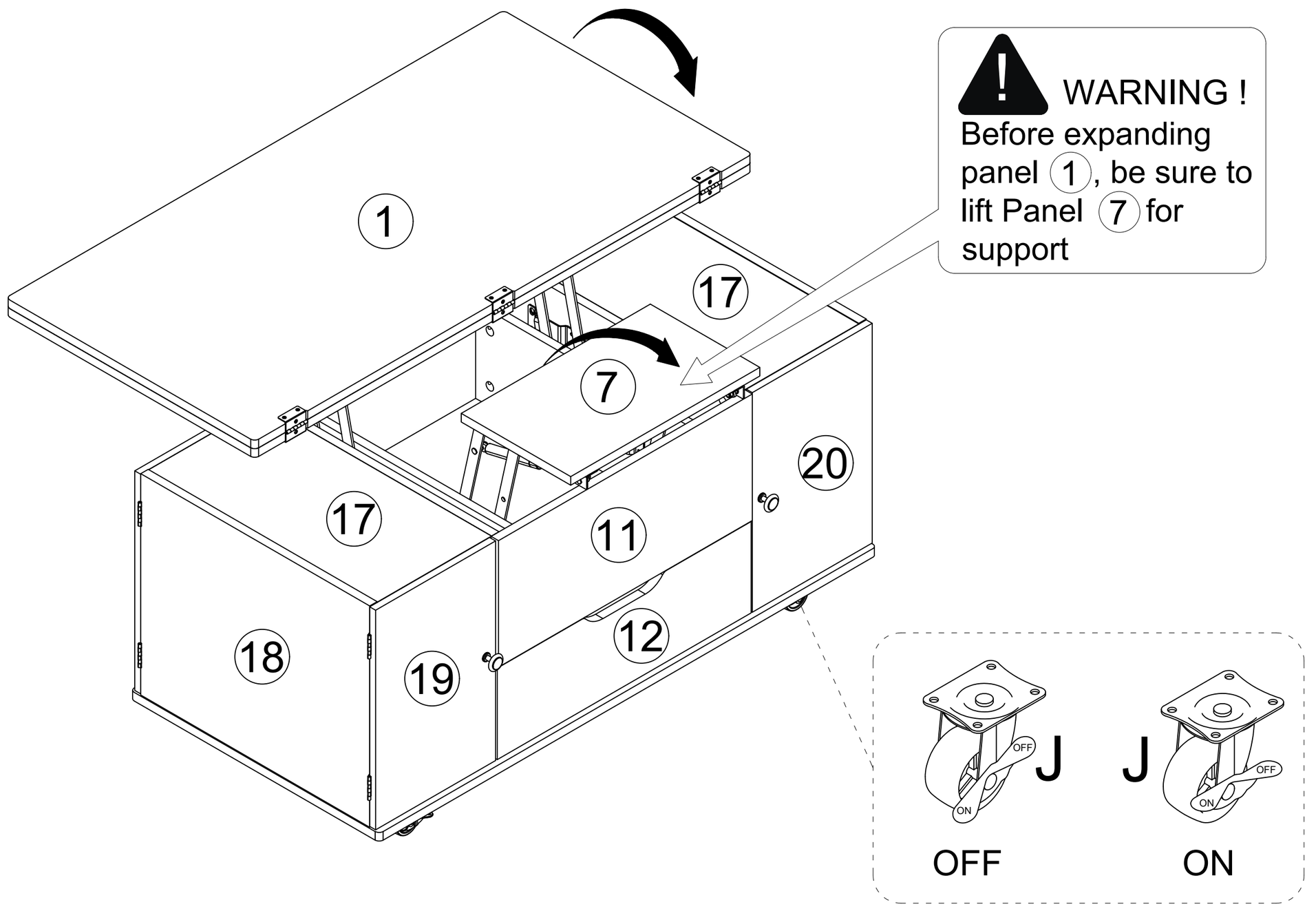

The table can be moved or fixed by adjusting component J 's brake system.

STEP 59

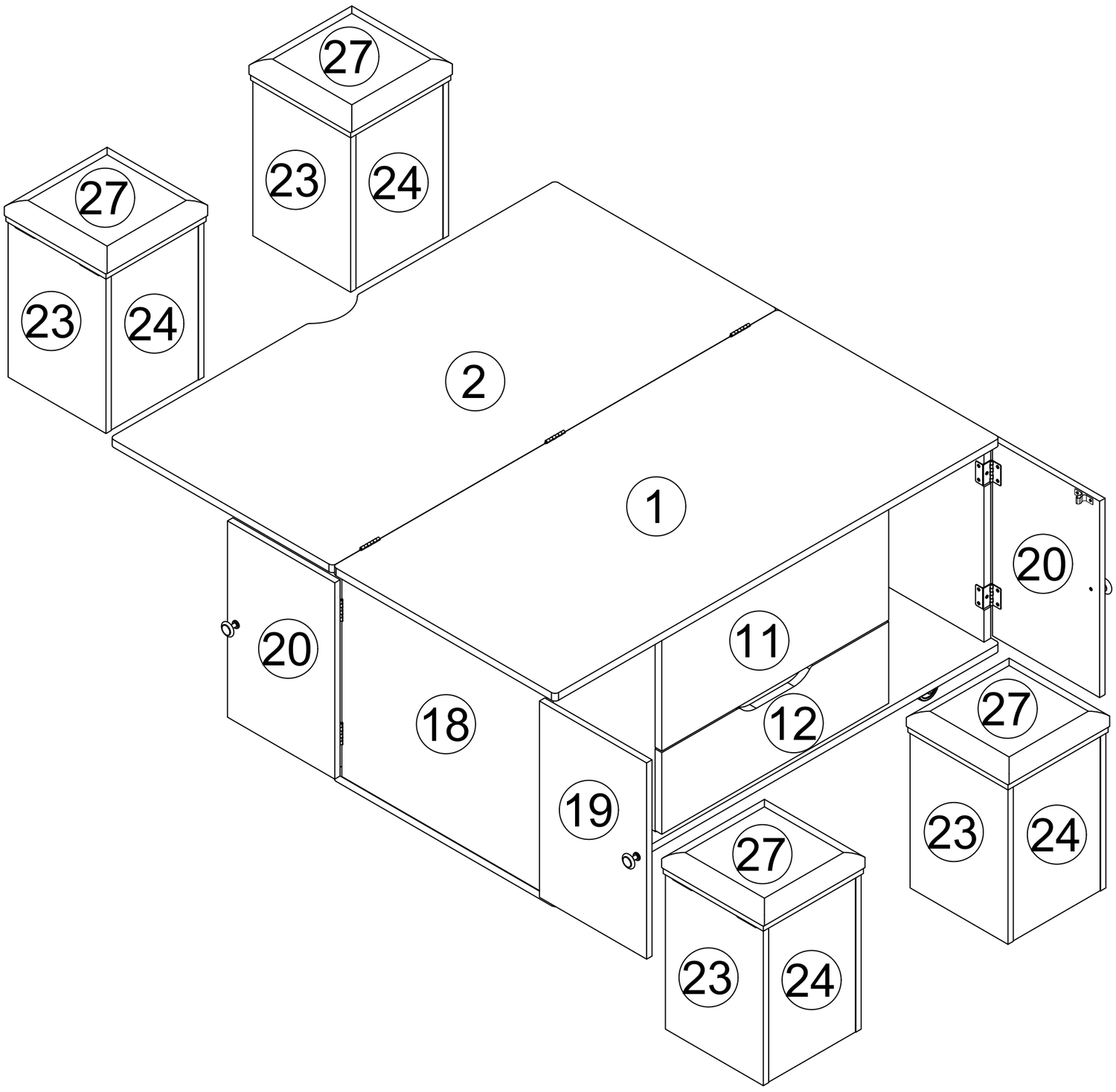

User Guide

STEP 60

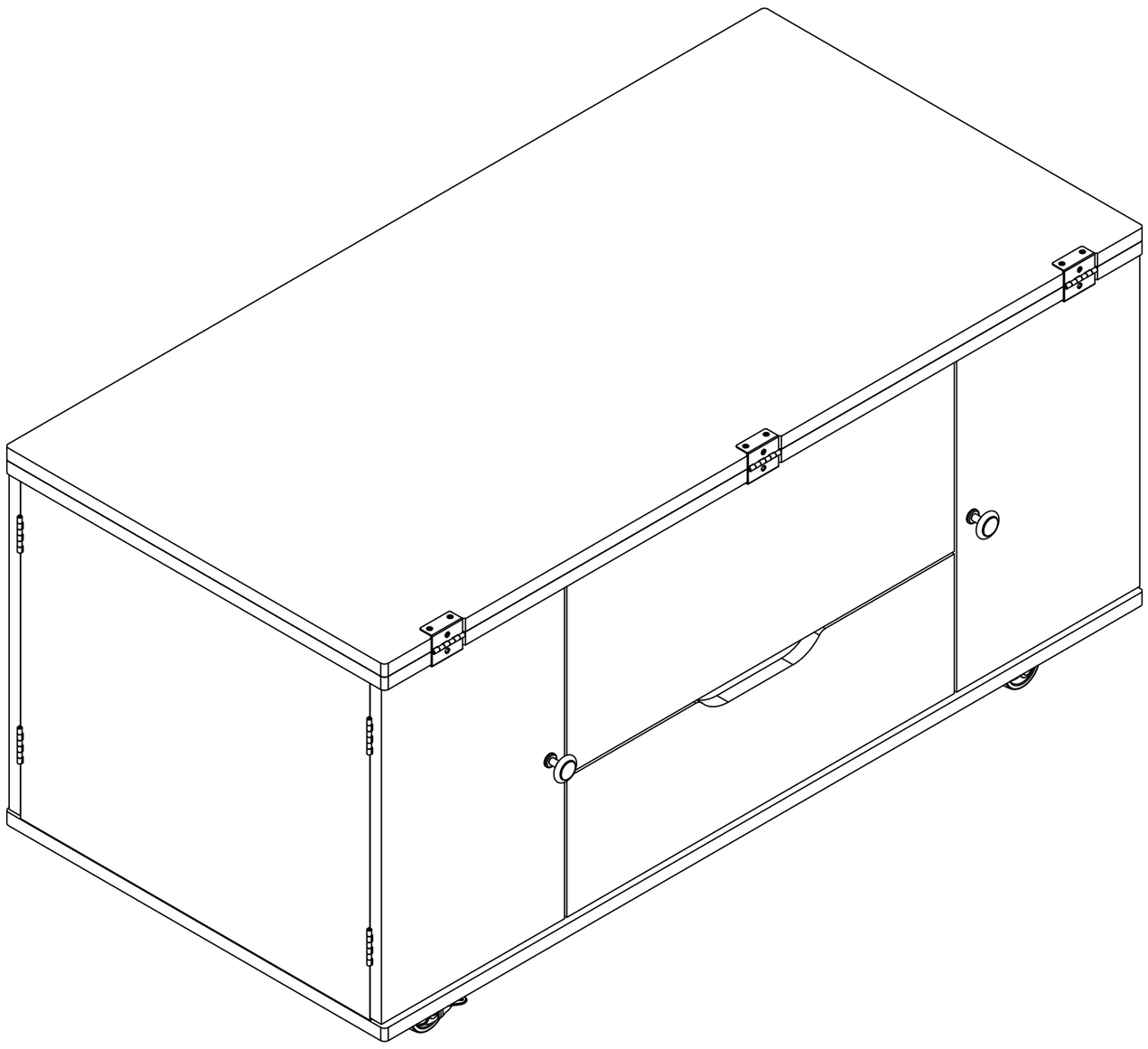



WARNING !

Do not play on this furniture with mechanical devices. Be careful to avoid iniury when you are about to close the table top downwards.

Always keep this furniture closed when not in use

Your desk is ready for use

Questions & Answers about Proposition 65

- What is Proposition 65?

Proposition 65 requires businesses to provide warnings to Californians about significant exposures to chemicals that cause cancer, birth defects or other reproductive harm. These chemicals can be in the products that Californians purchase, in their homes or workplaces, or that are released into the environment. By requiring that this information be provided, Proposition 65 enables Californians to make informed decisions about their exposures to these chemicals.

Proposition 65 also prohibits California businesses from knowingly discharging significant amounts of listed chemicals into sources of drinking water.

Proposition 65 requires California to publish a list of chemicals known to cause cancer, birth defects or other reproductive harm. This list, which must be updated at least once a year, has grown to include approximately 900 chemicals since it was first published in 1987.

- What types of chemicals are on the Proposition 65 list?

The list contains a wide range of naturally occurring and synthetic chemicals that include additives or ingredients in pesticides, common household products, food, drugs, dyes, or solvents. Listed chemicals may also be used in manufacturing and construction, or they may be byproducts of chemical processes, such as motor vehicle exhaust.

- What does a warning mean?

If a warning is placed on a product label or posted or distributed at a workplace, a business, or in rental housing, the business issuing the warning is aware or believes that it is exposing individuals to one or more listed chemicals.

By law, a warning must be given for listed chemicals unless the exposure is low enough to pose no significant risk of cancer or is significantly below levels observed to cause birth defects or other reproductive harm.

- Where can I get more information on Proposition 65?

If you have specific questions on the administration or implementation of Proposition 65, you can contact OEHHA's Proposition 65 program at P65.Questions@oehha.ca.gov, or by phone at (916) 445-6900.