MADE IN CHINA

27006-P4GD

OPERATIONS MANUAL

4MODERN HOME

Assembly & Installation Instructions

Dear Customer :

Thank you for choosing 4modernhome!

We appreciate your business. Should you have **any questions** or encounter **any issues**, please don't hesitate to contact us. You can reach us via email at **support@4modern-home**.com or by **calling 469-312-6428**.Our team is dedicated to ensuring your complete **satisfaction** with your purchase. We value your feedback, as it helps future customers in making informed decisions. We encourage you to share your experience by leaving a brief product review on the platform where you made the purchase. Once again, thank you for choosing 4modernhome!

Best regards!

[4Modern home/Support Team]

Warning: If any special control devices are used with this fixture, follow the instructions carefully to assure full compliance with N.E.C.requirements. If there are any questions, contact a qualified electric contractor.

Warning: California Residents Proposition 65 This product contains lead, a chemical known to the state of California to cause cancer and birth defects or other reproductive harm. Do not place the product in your mouth. Wash your hands after handling this product.

Caution: It is highly recommended to get an electrician to install this light. Please make sure to turn the electricity off at the main circuit breaker before beginning installation. All glass is fragile.Use care when handling glass component(s)and/or lamp(s).

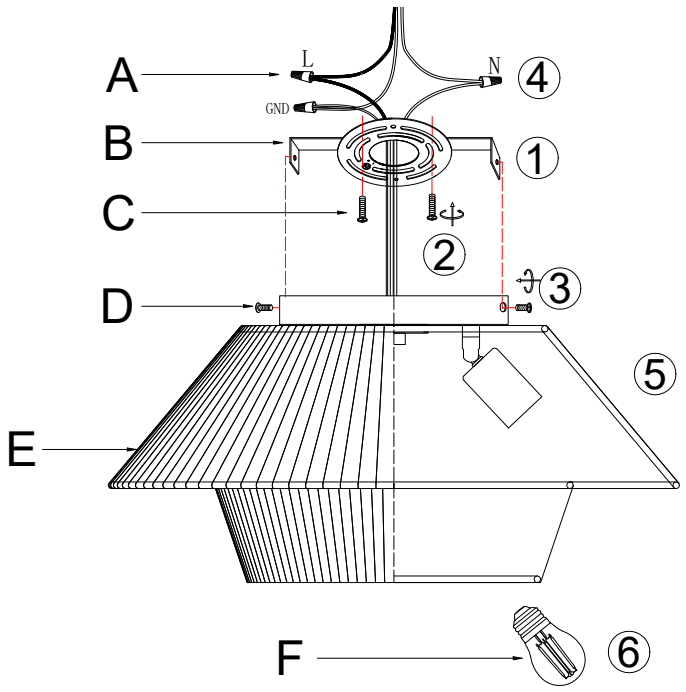

Applicable bulb type：A60、 G45、 ST64 ...

WIRE CONNECTION DIAGRAM

Wires meeting safety standards are required to connect the electrical circuit.

CAUTION: Risk of fire

Please read all instructions carefully. Before you proceed to install, make sure that the power supply is turned off and remains off until installation is completed.

PARTS INCLUDED

Code	Part Description	QTY
A	Wire caps	3
B	Green screw	1
C	Mounting bracket	1
D	Canopy screws	2
E	Modulator body	1
F	Lamp bulb	0