Dimensions

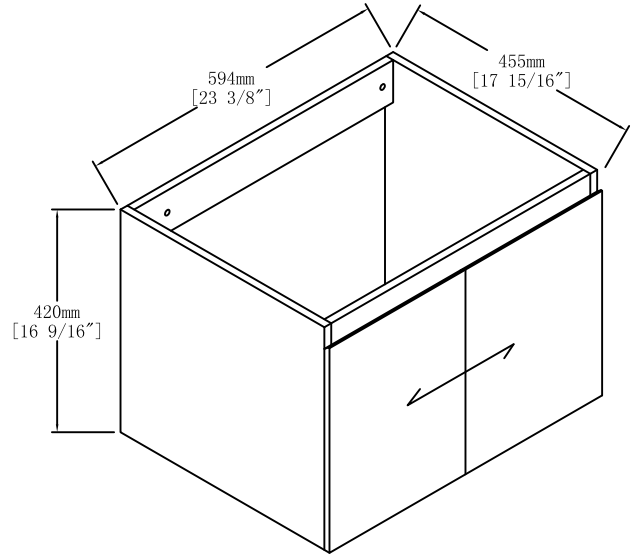

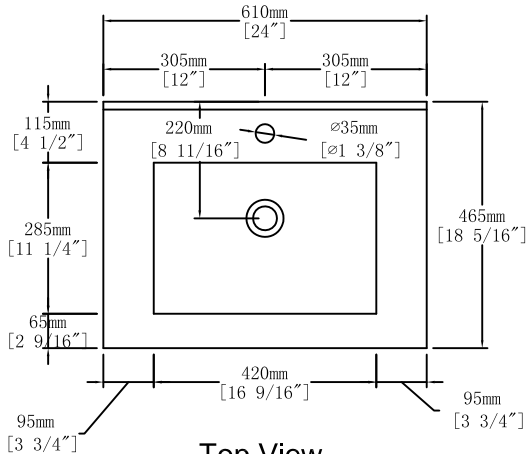

Top View

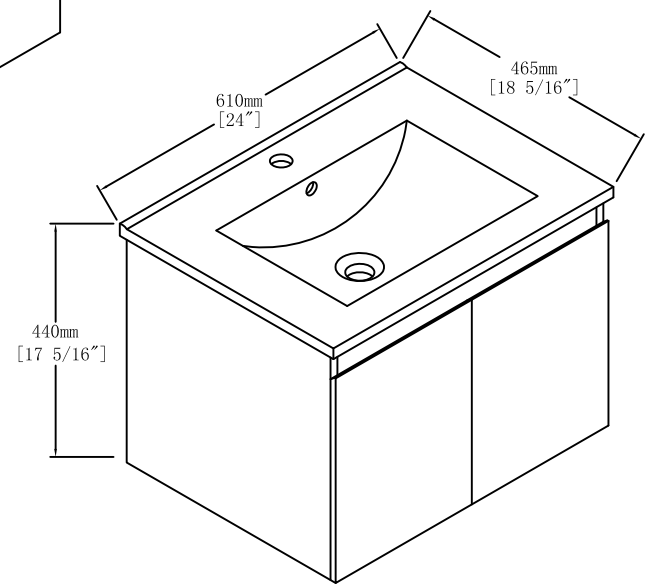

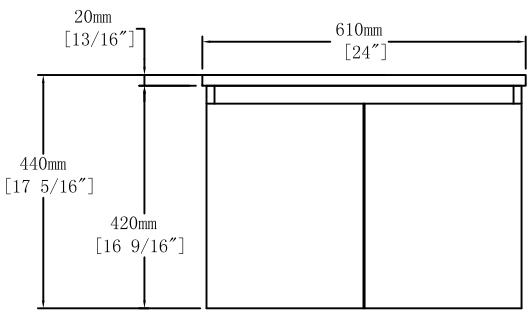

Front View

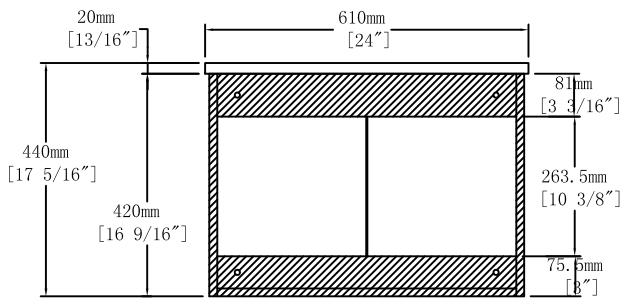

Back View