TEAR SHEET



Florenz 18" Double Sconce

Item # FW 2051GDL

Designer: Fisher Weisman

Height: 18.25"
Width: 14"
Extension: 5.75"
Backplate: 3.75" x 5.25" Oval
Finishes: GDL, SVL
Socket: 2 - E12 Candelabra
Wattage: 2 - 5.5 LED C11
Weight: 2 Pounds
Note: 120V Configuration Only | Requires Smaller Outlet Box

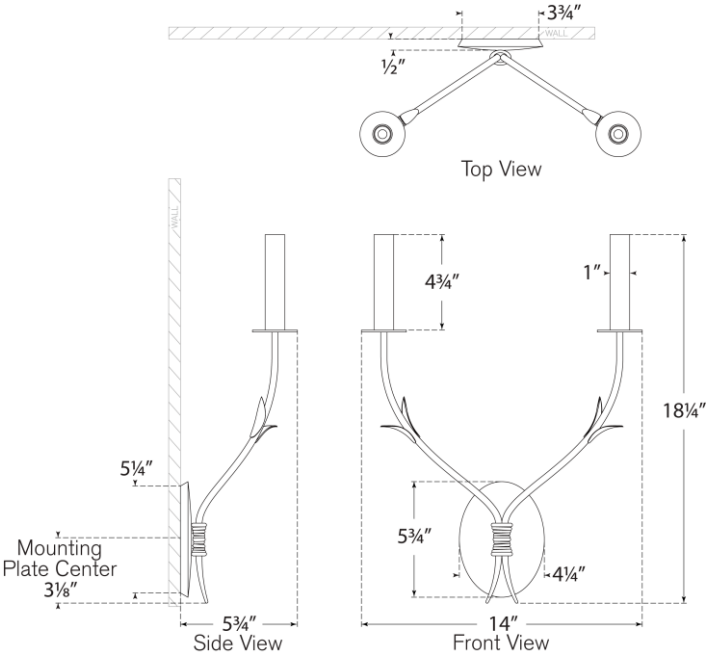

VISUAL COMFORT & CO.