PANEL POSITION

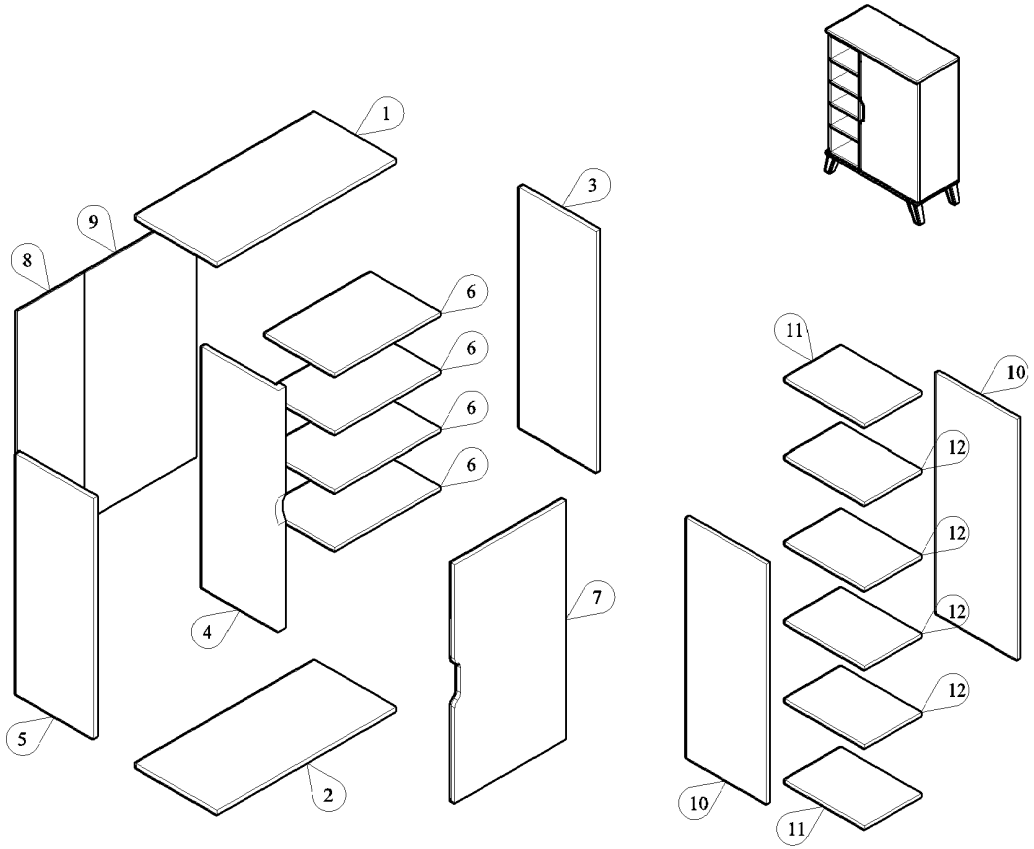

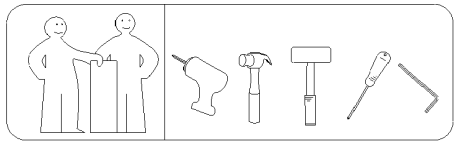

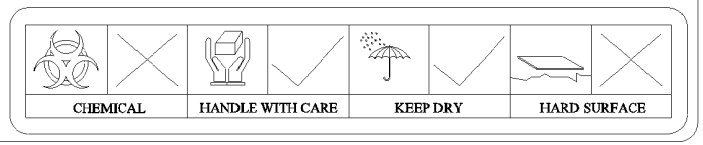

	ACCESSORIES (i)	QUANTITY
A	MINIFIX M5 x 24MM	3 PCS
B	MINIFIX CASING	3 PCS
C	WOOD DOWEL M8 x 30MM	9 PCS
D	WOOD DOWEL M6 x 30MM	8 PCS
E	CAPWOOD M6 x 50MM	6 PCS
F	IRON SHELF SUPPORT	32 PCS
G	POWER PIN	35 PCS
H	HINGES 5/8 SCREW M3.5 x 16MM	2 PCS 12 PCS
I	PVC LEG (138MM) SCREW M3.5 x 16MM	5 PCS 20 PCS
J	ALLEN KEY	1 PC
	ACCESSORIES (ii)	
	MOUNTING STRAP	1 PC
	WALL PLUG	1 PC
	SCREW M4 x 30MM	1 PC
	SCREW M3.5 x 16MM	1 PC

START ASSEMBLY

STEP 1

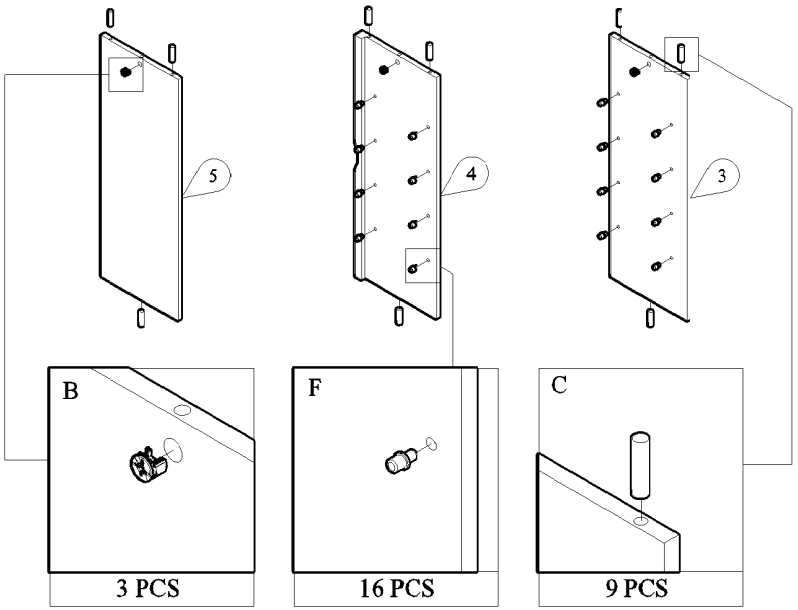

STEP 2

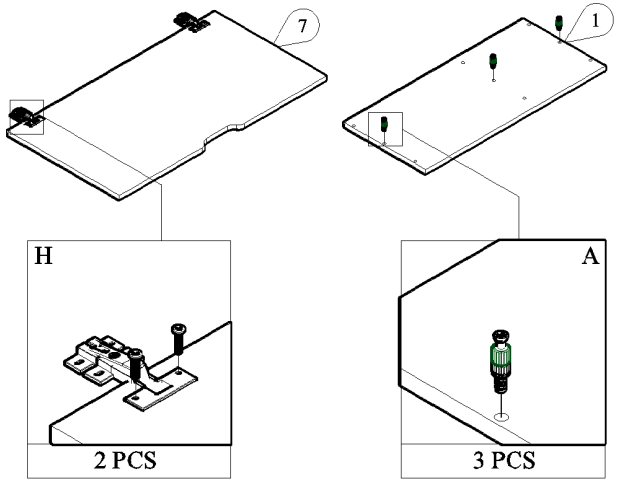

STEP 3

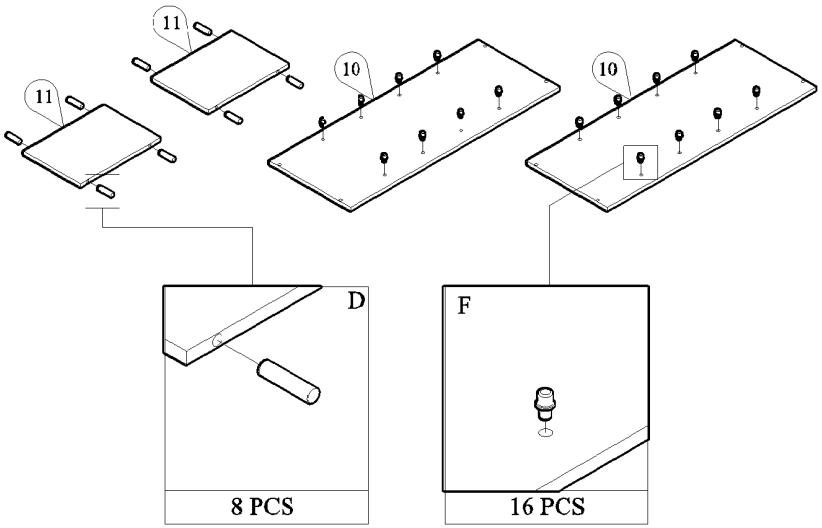

STEP 4

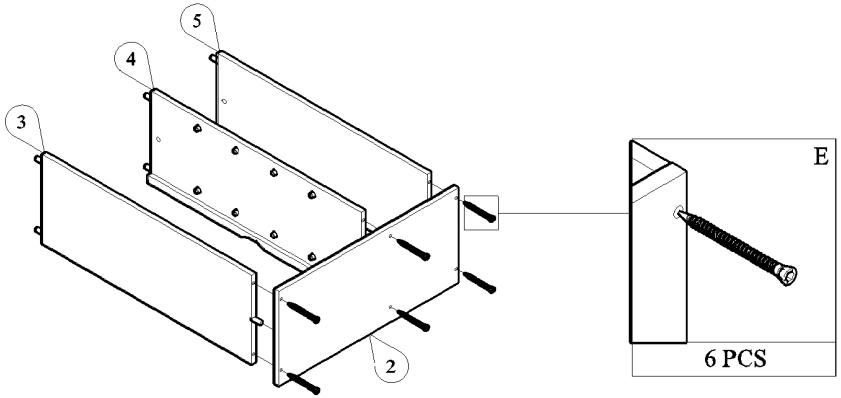

STEP 5

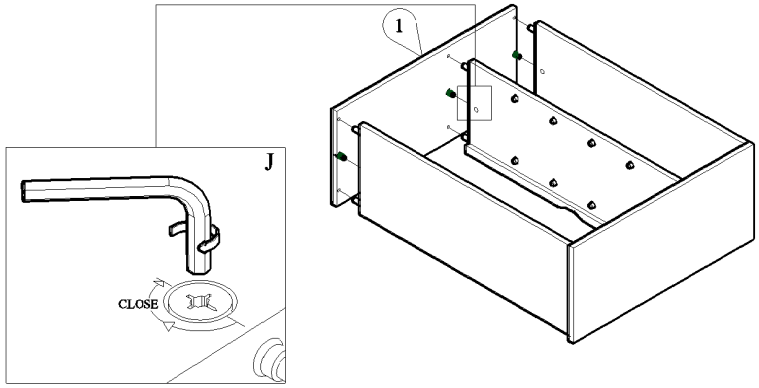

STEP 6

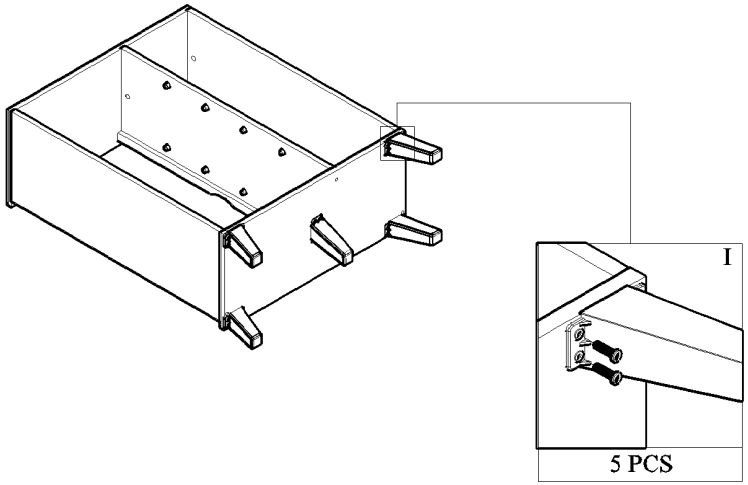

STEP 7

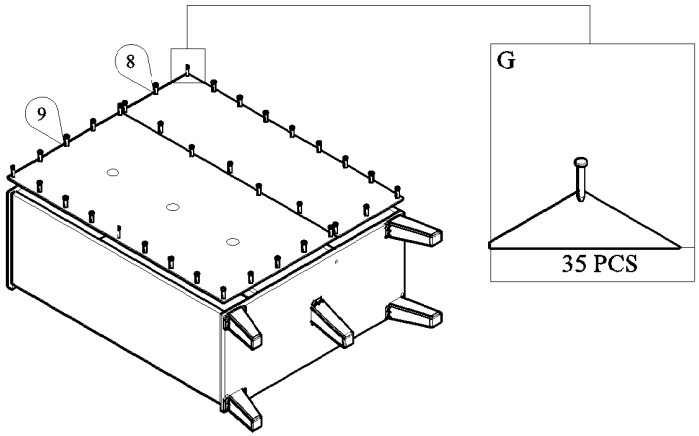

STEP 8

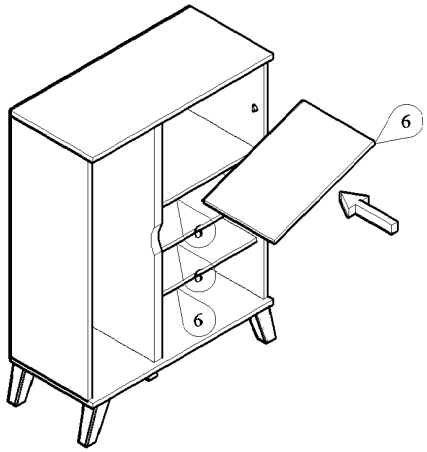

STEP 9

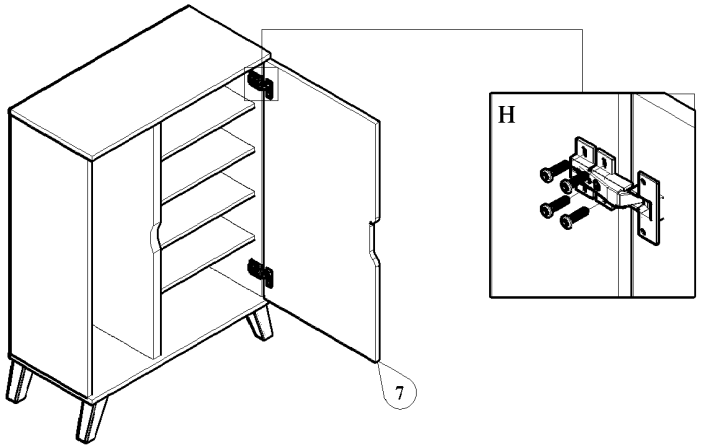

STEP 10

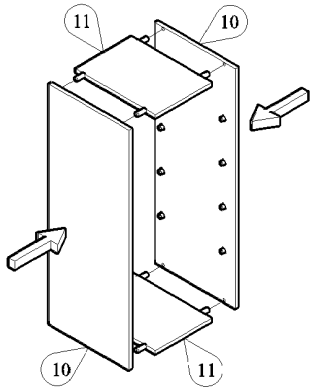

STEP 11

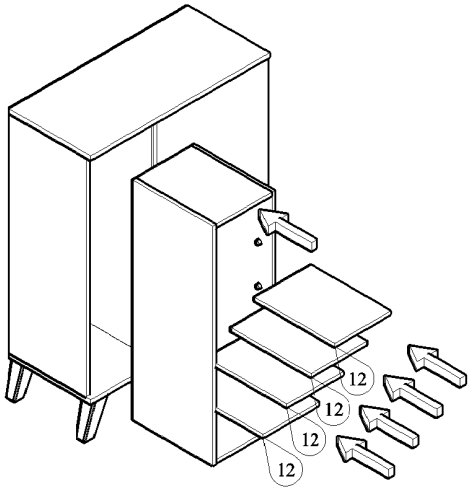

COMPLETE

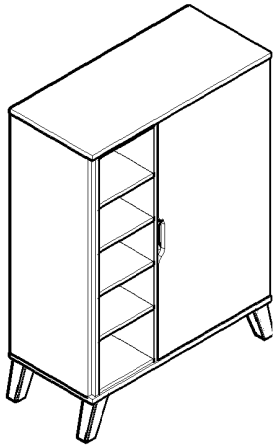

HOW TO ADJUST GLASS/DOORS

● There is a gap between the door and the shelf with doors closed

Loosen the back adjustable screw which is one of the two screws looking from the front while supporting the doors, adjust the door by moving it back and forth, then tighten the back screw.

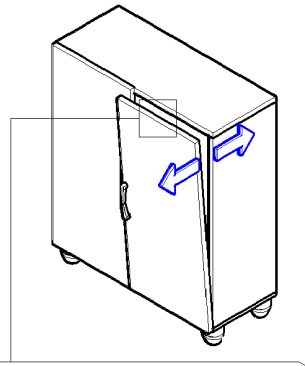

If there is a gap between the doors on the top.

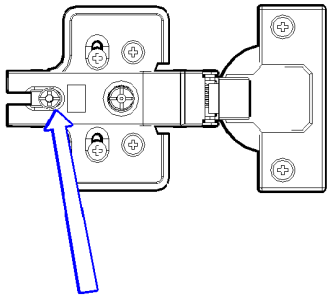

Loosen this screw, adjust by moving back and forth

● There is a gap in the middle with doors closed

Loosen the ① back adjustable screw which is one of the two screws looking from the front while supporting the doors, tighten the ② screw clockwise, then adjust the middle gap. After adjusted, tighten the ① screw.

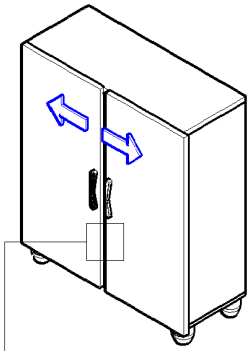

If the gap is wide

① Fixing screw

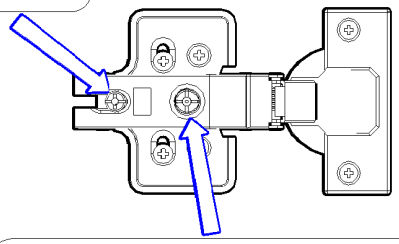

② Adjusting screw
(If you twist clockwise once, the door moves about 2mm inward)

● There is a gap on the top of the door when doors are closed
(Glass slide hinge does not require this step)
(4 screw hole hinge does not require ①)

Loosen the slide hinge screw while supporting the door, adjust the door by moving it up and down then tighten the screws.
(Please loosen the slide hinge screws of the door completely you are adjusting before moving it up and down.)

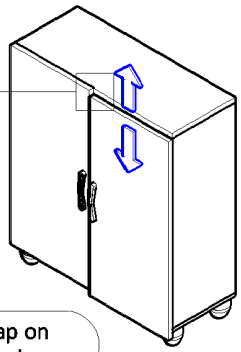

If there is a gap on the top of the door

① Open screw

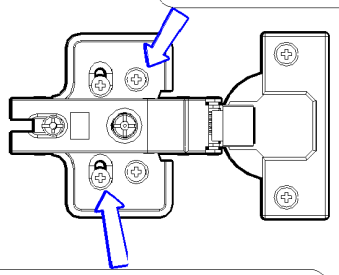

② Slide hinge screws (Please loosen these screws before adjusting)

● There is a V gap when doors are closed

Loosen the ①back adjustable screw which is one of the two screws looking from the front while supporting the doors, tighten the ② screw clockwise, then adjust the middle gap. After adjusted, tighten the ① screw.

If there is a gap between the doors on the top
(Please adjust slide hinge the top part door)

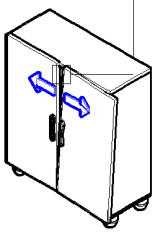

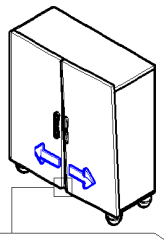

If there is a gap between the doors on the bottom
(Please adjust slide hinge the bottom part door)

① Fixing screw

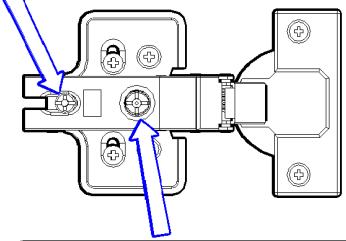

② Adjusting screw
(If you twist clockwise once, the door moves about 2mm inward)

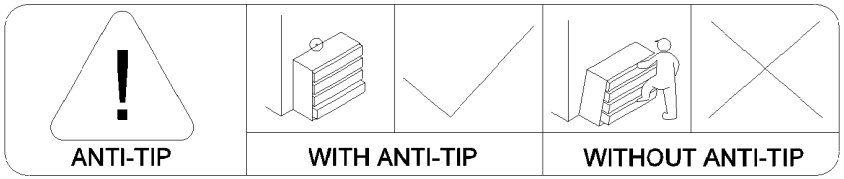

Installation Instruction :

A tip restraint must be attached to a wall stud using the 2" screw enclosed.

1. Attach a strap to the back top rail or back top edge of the furniture using the 5/8" screw provided.
2. Locate the strap on the wall over a wall stud and 2 inches below the mounting strap secured to the back of your unit. Attach to the wall stud using the 2" screw provided, through the smaller hole.
3. Place the furniture into position so both mounting strap are vertically in line.
4. Lace the end of the restraint strap through the larger hole in each mounting strap. Bring both ends together and slide the flat end through the locking end and draw it through until all slack is removed.
5. Confirm that the strap is securely laced and locked.

Part Include :

1 Pc 1 Pc 1 Pc 1 Pc

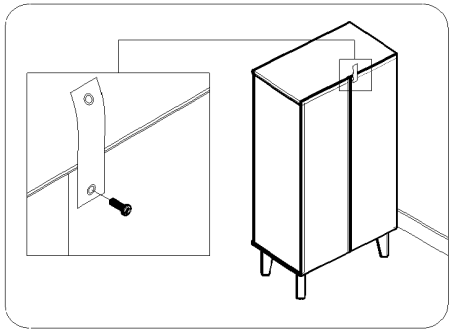

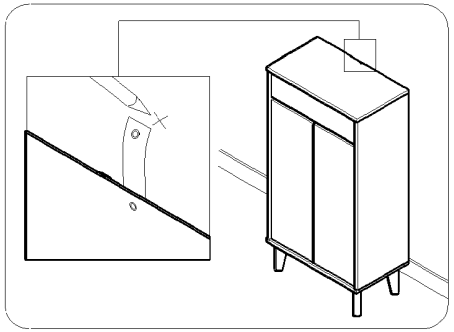

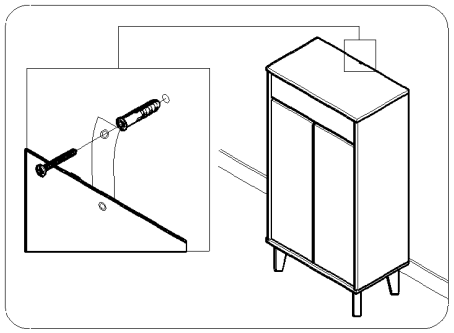

ANTI-TIP DEVICE INSTALLATION INSTRUCTION

IMPORTANT SAFETY INSTRUCTIONS

Read and follow all instructions when using the range to prevent the risk of personal injury or damage. This guide does not cover all possible conditions that may occur. Always contact your service agent or manufacturer about problems that you do not understand.

This is the safety alert symbol. This symbol alerts you to potential hazards that can result in property damage and/or serious bodily harm or death. All safety messages will follow the safety alert symbol and either the word WARNING or CAUTION. These words means:

WARNING - Indicates a hazardous situation which, if not avoided, could result in death or serious injury.

CAUTION - Indicates a hazardous situation which, if not avoided, could result in minor or moderate injury.

ANTI-TIP DEVICE

WARNING

- **TO REDUCE THE RISK OF TIPPING, THE APPLIANCE MUST BE SECURED BY A PROPERLY INSTALLED ANTI-TIP DEVICE, TO CHECK IF THE DEVICE IS INSTALLED PROPERLY, VERIFY THAT ANTI DEVICE IS ENGAGED, OR GRASP THE TOP REAR EDGE OF THE RANGE BACK GROUND AND CAREFULLY ATTEMPTED TO TILT IT FORWARD.** Refer to the installation section for instructions.
- A child or adult can tip the range and be killed.
- Install the anti-tip device to the structure and/or the range. Verify the anti-tip device has been properly installed and engaged following the instructions on the anti-tip bracket template.
- Engage the range to the anti-tip device following the instructions on the anti-tip bracket template. Ensure the anti-tip device is re-engaged when the range is moved by following the instruction on the anti-tip bracket template.
- Re-engage the anti-tip device if the range is moved. Do not operate the range without the anti-tip device in place and engaged.
- See installation instruction for details.
- Failure to do so can results in death or serious injury to children or adults.

- Never remove the dresser/chest of drawer legs. The range will not be secured to the anti-tip bracket it the legs are removed.
- Do not step or sit on drawers. The range could be tipped and injury might result.
- Do not rest large heavy items on the open drawer. The range could tip forward and cause injury.
- Re-engage the anti-tip device after pulling the range out for moving or any other reason.
- Failure to follow these instructions can result in serious injury or death to children or adults.

Manufactured by : S&E Enterprise Sdn Bhd **03/2018**
Address : PLO 65, No;K16, Kawasan Perindustrian Tanjung Agas, 84000 Muar, Johor, West Malaysia.